Dec. 8, 1925. 1,565,000

F. A. BARNES

CLOTHES WRINGER

Original Filed Nov. 17, 1922

Fig. 1.

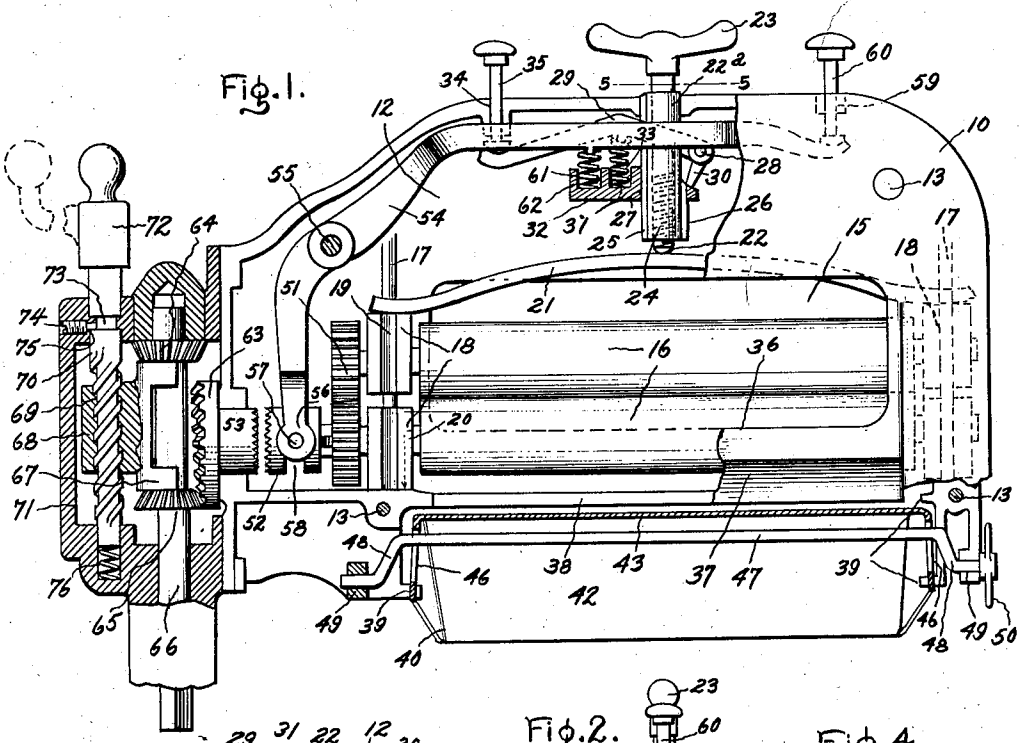

Fig. 2.

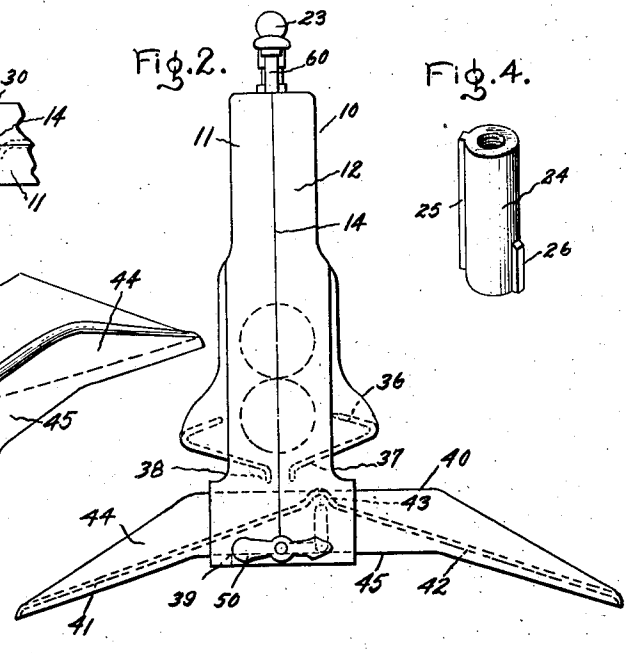

Fig. 3.

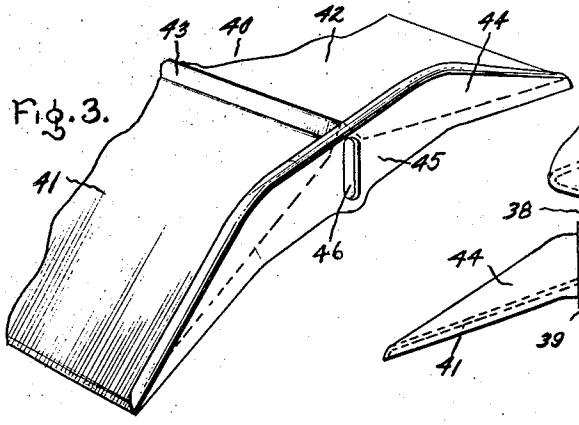

Fig. 4.

Fig. 5.

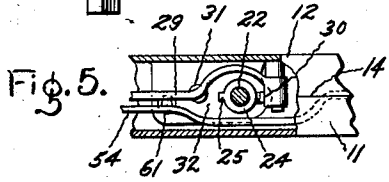

Inventor:
Frederick A. Barnes,
by Alfred T. Babb
His Attorney.

Patented Dec. 8, 1925. 1,565,000

UNITED STATES PATENT OFFICE.

FREDERICK A. BARNES, OF CLEVELAND, OHIO, ASSIGNOR TO THE FOOTE-BURT COMPANY, OF CLEVELAND, OHIO, A CORPORATION OF OHIO.

CLOTHES WRINGER.

Original application filed November 17, 1922, Serial No. 601,664. Divided and this application filed August 28, 1924. Serial No. 734,563.

To all whom it may concern:

Be it known that I, FREDERICK A. BARNES, a citizen of the United States, residing at Cleveland, in the county of Cuyahoga and State of Ohio, have invented certain new and useful Improvements in Clothes Wringers, of which the following is a specification.

This application is a division of my application, Sr. No. 601,664, filed November 17, 1922, Patent Number 1,520,899, dated Dec. 30, 1924.

The invention relates to clothes wringers such as are used in connection with washing machines and particularly to power-driven wringers although it is not necessarily limited thereto.

The object of my invention is to provide an improved wringer which is simple in structure, convenient to use, can be manufactured at a low cost, and offers the maximum degree of safety for the operator, and for a consideration of what I believe to be novel and my invention, attention is directed to the accompanying description and the claims appended thereto.

In the drawing, Fig. 1 is a side elevation, partly in section of a wringer embodying my invention. Fig. 2 is an end view thereof; Fig. 3 is a perspective view of a part of the drain board; Fig. 4 is a perspective view of a detail, and Fig. 5 is a detail plan view taken on line 5—5, Fig. 1, a part of the frame being broken away.

Referring to the drawing, 10 indicates the frame of the wringer which is made in two complementary halves 11 and 12 fastened together by suitable bolts, studs or rivets 13. The frame is split vertically on its longitudinal axis, each half of the frame comprising a side portion, an end portion which is one-half the entire end wall, and a top portion which is one-half the entire top wall. When the two frame halves are assembled, the end portions and top portions fit against each other at their edges as indicated at 14 to space the side walls apart. In the side portions of the frame are rectangular openings 15 through which the clothes are fed to the wringer rolls indicated at 16. On the inner surface of the side walls of the wringer frame at the ends of the frame are formed opposed, vertically-extending integral ribs 17 which serve to hold bearing blocks 18 for the shafts of the wringer rolls. The bearing blocks may be formed of wood or other suitable material and are provided with grooves 19 on opposite sides into which ribs 17 fit. Each block comprises a single piece with a hole bored in it to receive the shaft end. The frame is provided with seats 20 at its ends upon which the lower bearing blocks rest. Extending lengthwise of the wringer frame with its ends resting on upper bearing blocks 18 is a tensioning spring 21 which is engaged at its center by the inner end of a post 22. Post 22 projects out through an opening 22^a in the top of the wringer frame and is provided with a handle 23 for turning it. Post 22 is threaded and fits in a threaded sleeve 24 having a longitudinally-extending rib 25 on one side and a stop lug 26 on the other side. Sleeve 24 is carried in a guide 27 formed integral with the wringer frame and its outer end extends through opening 22^a in the top of the wringer frame. Rib 25 fits in a notch in guide 27 and a similar notch in the top of the wringer frame and serves to keep sleeve 24 from turning while permitting it to move vertically. Pivoted in the side walls of the wringer frame as indicated at 28 is a lever arm 29 provided with a downwardly turned catch finger 30 adapted to engage the top of stop lug 26 to hold sleeve 24 from vertical movement. Lever arm 29 is biased to a position in which finger 30 engages lug 26 by a spring 31 supported by a platform 32 which may be formed integral with guide 27 and the side walls of the frame, and is provided with a recess 33 in which the spring is seated. Adjacent to the free end of lever arm 29 the top of the wringer frame is provided with an opening 34 through which projects a pin 35 having a head on its inner end for engagement with arm 29 and a head on its outer end adapted to be struck by the hand of the operator. When the parts are in the positions shown in the drawing, sleeve 24 is held from vertical movement by lever arm 29 and the tension of spring 21 on the wringer rolls can be increased and decreased by screwing post 22 down and up. If it is desired to quickly release the tension on the wringer rolls it is only necessary to force pin 35 downward by pushing down on or striking the head on the end of the pin, thereby turning lever

arm 29 so as to move finger 30 away from stop lug 26 thus releasing sleeve 24. Sleeve 24 and post 22 will then move upward together, relieving the pressure on spring 21. To reset the quick release mechanism it is only necessary to turn post 22 in a direction to run sleeve 24 downward until spring 31 can force finger 30 over lug 26. Then the rolls can be put under tension again by turning post 22 in the other direction.

At the lower edges of openings 15 the side walls of the frame are provided with outwardly-projecting, downwardly-sloping tables 36 over which the clothes slide in passing to and from the wringer and beneath tables 36 are inwardly-projecting downwardly-sloping drain plates 37, the inner edges of which are slightly spaced apart to provide a slot 38 which extends the length of the wringer rolls directly under the lower roll. At the bottom of the frame, the ends are provided with inwardly-facing, spaced ledges 39 between which is arranged a sliding drain board 40. The drain board is preferably made from a single piece of sheet material shaped to provide two downwardly-sloping water sheds 41 and 42 separated at their meeting edges by a rounded, upwardly-projecting ridge 43, and end pieces 44 for preventing water from spilling off the ends of the sheds. End pieces 44 have flat, straight bottom edges as indicated at 45 which slide on ledges 39. In end pieces 44 are central, vertical slots 46 through which a crank 47 extends. Crank 47 has a straight, central portion which extends through the slots and angularly bent ends 48 which are pivoted in bearing openings 49 in the wringer frame. At one end crank 47 is provided with an operating handle 50 which may be made with an arrow head to indicate the direction of wringing for which the drain board is adjusted. In Fig. 2 the drain board is positioned for wringing from left to right and it will be noted that ridge 43 stands beyond slot 38 as regards the direction of wringing. Water wrung from the clothes will be directed positively by drain plates 37 onto drain board shed 41 from whence it will run back into the tub out of which the clothes are being wrung. At this time drain board shed 42 forms a chute for the clothes onto which they are directed by table 36. To adjust the drain board for wringing in the opposite direction crank 47 is turned through an angle of 180° in anticlockwise direction as seen in Fig. 2. This will slide the drain board toward the left a distance equal to the throw of crank 47 which will bring ridge 43 to the other side of slot 38. In other words, to adjust the drain board for wringing in opposite directions requires only that it be slid to move ridge 43 from one side of slot 38 to the other. This makes a simple and advantageous drain board arrangement which requires no tilting of the board, is easily operated, and provides a downwardly-sloping clothes chute for the clothes after they have passed through the wringer. By providing drain plates 37 for positively directing water to the drain board, only a very short movement of the drain board is required. Ridge 43 prevents water spilling down the wrong side of the drain board. Preferably the arrangement is such that the crank 47 and handle 50 turn through an angle a little greater than 180 degrees in shifting the drain board from one position to the other. By this arrangement the crank moves somewhat beyond dead center so that it serves to lock the drain board in position for wringing. Also the weight of the crank and the handle assist in locking the drain board.

The wringer rolls are geared together by gear wheels 51 and the shaft of the lower roll projects beyond the gear wheel and has splined thereon a sliding clutch member 52. Clutch member 52 is provided with teeth adapted to engage co-operating teeth on a clutch member 53 journaled in the end of the wringer frame. Clutch member 52 is adapted to be moved into engagement with clutch member 53 by a lever 54 located inside the wringer frame and pivoted to it at 55. The one end of lever 54 is provided with a forked head 56 which straddles clutch member 52 and has pins 57 which engage in a groove 58 in the clutch member. The other end of lever 54 lies adjacent to the top wall of the wringer frame. Projecting through an opening 59 in the top wall of the frame is a pin 60 having a head on its inner end which engages the end of the lever and a head on its outer end which serves as a handle. Clutch member 52 is biased to a position out of engagement with clutch member 53, i. e., to open position, by a spring 61 which rests in a pocket 62 in platform 32 and engages the underside of lever 54. By pushing down on pin 60, lever 54 is turned to bring clutch member 52 into engagement with clutch member 53, but as soon as this pressure is released, the clutch automatically flies open.

On the outer end of clutch member 53 is a bevel gear wheel 63 and adapted to mesh therewith are two spaced bevel gear wheels 64 and 65 carried by a vertical driving shaft 66. Shaft 66 is arranged to have a limited amount of vertical movement and has three positions, an intermediate or neutral position in which gear wheels 64 and 65 are both out of mesh with gear wheel 63, a lower position in which gear wheel 64 is in mesh with gear wheel 63, and an upper position in which gear wheel 65 is in mesh with gear wheel 63. When gear wheel 64 meshes with gear wheel 63 the rolls are driven in one direction and when gear wheel 65 meshes there-

with the rolls are driven in the opposite direction. Shaft 66 is moved vertically to mesh and unmesh the gear wheels by a yoke 67 carried by a head 68. Head 68 has a threaded opening 69 in which is a vertical threaded post 70 journaled at its ends in the walls of a gear housing 71. On the upper end of post 70 is an operating handle 72. The screw thread on post 70 has a high pitch so as to be quick-acting and by turning handle 72 in one direction or the other from neutral position, either gear wheel 64 or 65 can be brought into mesh with gear wheel 63. In post 70 is an annular groove 73 which receives the end of a set screw 74 to hold the post from vertical movement. In the lower wall of groove 73 are suitable depressions 75 to receive the end of set screw 74, the post being forced upward toward the set screw by a spring 76 located beneath the post. Depressions 75 are suitably located to stop handle 72 in neutral position and in its two other positions wherein either gear wheel 64 or 65 is in mesh with gear wheel 63.

Drive shaft 66 may be driven in any suitable manner usually from the same motor which drives the washing machine, and when the wringer is in use it is driven continuously at a suitable speed. In use the operator starts the motor or other driving means for shaft 66 and then turns handle 72 to bring gear wheel 64 or 65 into mesh with gear wheel 63 according to the direction in which it is desired to wring. This, however, does not start rolls 16 but only the clutch member 53. Now, when the operator wants to wring an article, the operator presses down on pin 60 to turn lever 54 and bring clutch member 52 into engagement with clutch member 53. The wringer rolls are then driven and the article can be wrung. It will be seen that with this arrangement the operator is required to hold one hand continuously on pin 60 in order to keep the clutch in and the rolls running. This means that the operator must continuously perform a conscious act. If the hand is removed, the clutch will immediately open and the rolls stop. The arrangement is such that only a slight pressure on pin 60 is required to keep the clutch in, so as not to tire the operator. This clutch arrangement in combination with the quick release for the rolls offers the highest degree of safety for the operator. If the operator's free hand becomes caught in the rolls, the rolls will be instantly stopped by the removal of the other hand from pin 60, a thing which will be done unconsciously and the pressure on the rolls can be then instantly released by striking pin 35. This arrangement offers a high degree of safety for the further reason that the rolls are only running when the operator desires to wring and has one hand on pin 60. When the operator is taking clothes from the tub using both hands, the wringer rolls are stopped. This to a great extent does away with the possibility of the operator's hair getting caught in the rolls when bending over the tub. I regard this arrangement as one of the important features of my invention.

My improved wringer has also the advantages from a structural standpoint that it is simple in structure, comprises a minimum number of parts which are easily assembled, and can be built at a low cost. By splitting the frame on its vertical, longitudinal axis, the parts which are located inside the frame can be easily put in place and all are held when the two parts of the frame are fastened together. The bearing blocks for the wringer rolls can be first mounted on the rolls and then the rolls with the blocks thereon placed within the frame. No special pieces or parts are required for holding the bearing blocks, ribs 17 and seats 20 being integral parts of the frame. Furthermore, by splitting the frame in this manner it is an easy thing to cast tables 36 and drain plates 37 as integral parts of the fame.

In accordance with the provisions of the patent statutes, I have described the principle of operation of my invention, together with the apparatus which I now consider to represent the best embodiment thereof, but I desire to have it understood that the apparatus shown is only illustrative and that the invention may be carried out by other means

What I claim as new and desire to secure by Letters Patent of the United States, is:—

1. In a power driven wringer, the combination of a frame, rolls therein, a drive shaft, reversing gearing for connecting the drive shaft to the rolls, a clutch interposed between the gearing and the rolls, said clutch being biased to open position, a lever pivoted inside the frame for moving the clutch to closed position, and a handle projecting from the upper portion of the frame for holding the lever in position to maintain the clutch closed.

2. In a power driven wringer, the combination of a frame, rolls therein, a clutch member on one of said rolls, a second clutch member journaled in a wall of the frame, a gear wheel on said second clutch member, a gear housing, reversing gear means in said housing for engagement with said gear wheel, means biasing said clutch members toward non-engaging position, a lever pivoted inside the frame for moving the clutch to closed position, and a handle projecting from the upper portion of the frame for holding the lever in position to maintain the clutch members in engagement against the biasing force.

3. In a clothes wringer, the combination of a frame, rolls therein, shafts for the rolls, one of said shafts having an extended end, a

clutch member on such end, a second clutch member journaled in the frame, means biasing said clutch members to non-engaging position, a member for moving said clutch members into engagement, continuous pressure being required to hold them there, a bevel gear wheel on the second-named clutch member, a driving shaft, spaced gear wheels on said driving shaft, a yoke embracing said shaft, and a quick-acting screw for moving the yoke to bring either of said spaced gear wheels into engagement with the first-named gear wheel.

4. In a clothes wringer, the combination of a frame, rolls therein, walls forming a gear casing at one end of the frame, a horizontal shaft journaled in an inner wall of said casing, a forwardly facing gear wheel on said shaft, means for connecting the shaft to the wringer rolls, a vertical shaft extending parallel to the face of said gear wheel, spaced pinions fixed on such shaft, bearings for said vertical shaft in which it may be moved axially to bring the pinions into mesh with the gear wheel, a yoke engaging the vertical shaft between the pinions, and means for moving the yoke to effect axial movement of said vertical shaft.

5. In a clothes wringer, the combination of a frame, rolls therein, shafts for the rolls, one of said shafts having a projecting end, walls forming a gear casing at one end of the frame, a shaft journaled in an inner wall of said casing, a gear wheel on one end of said shaft, reversing gear wheels in said casing, means for moving them into engagement with said first named gear wheel, clutch members on the other end of said last named shaft and on the projecting end of said wringer shaft, means biasing said clutch members to open position, and means located within the wringer frame and projecting to a point outside the frame for moving the clutch to closed position against the action of said biasing means.

6. The combination with a wringer comprising a frame, rolls therein, a gear housing at one end of the frame, and reversing gearing in the housing, of a clutch located inside the wringer frame for connecting the gearing to the rolls, means biasing the clutch to open position, and a handle which projects through the upper portion of the wringer frame for moving the clutch to closed position against the action of said biasing means.

7. The combination with a wringer comprising a frame, rolls therein, a gear housing at one end of the frame, and reversing gearing in the housing, of a clutch located inside the wringer frame for connecting the gearing to the rolls, means biasing the clutch to open position, and a handle which projects through the upper portion of the wringer frame which on being pushed toward the frame moves the clutch to closed position against the action of said biasing means.

In witness whereof, I have hereunto set my hand this 18th day of August 1924.

FREDERICK A. BARNES.