Aug. 11, 1925. 1,549,498

J. PAISSEAU

MACHINE FOR VARNISHING BEADS

Original Filed Oct. 25, 1921

fig. 2

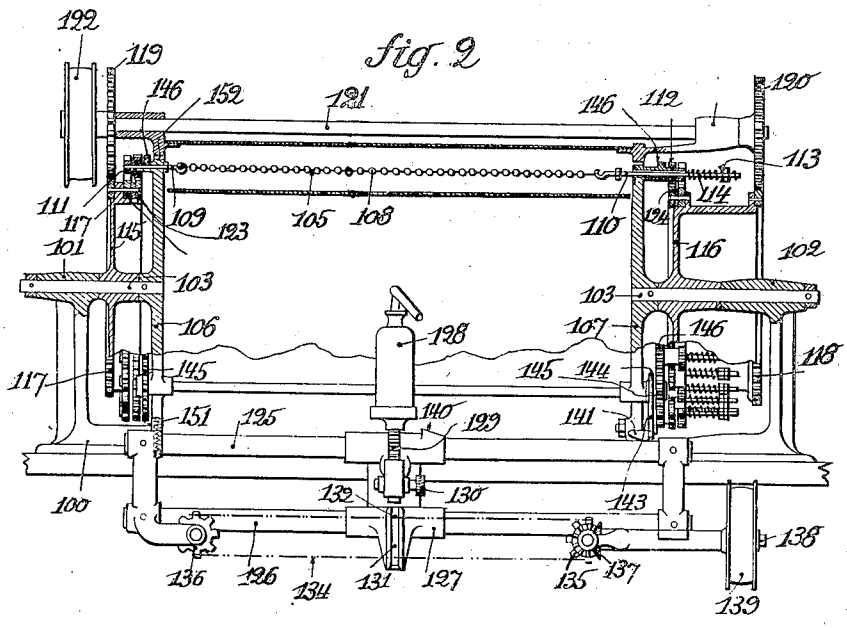

fig. 1

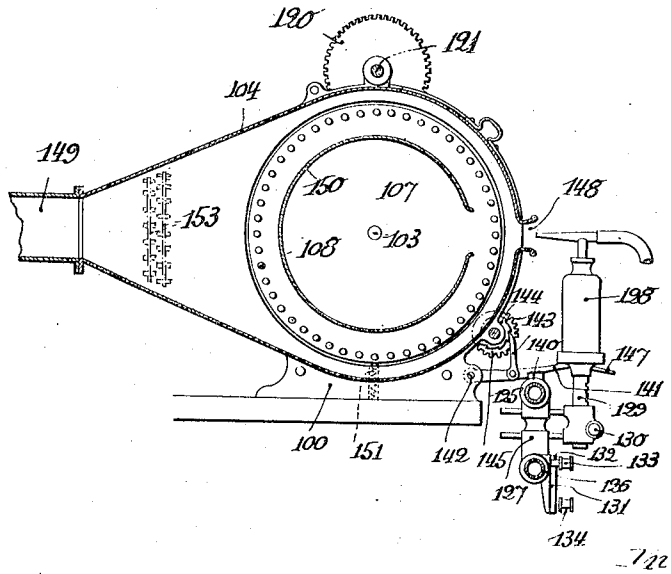

Inventor

Jean Paisseau

by A. B. Wilson & Co

Attorneys

Patented Aug. 11, 1925. 1,549,498

UNITED STATES PATENT OFFICE.

JEAN PAISSEAU, OF PARIS, FRANCE.

MACHINE FOR VARNISHING BEADS.

Original application filed October 25, 1921, Serial No. 510,271. Divided and this application filed August 9, 1923. Serial No. 656,567.

To all whom it may concern:

Be it known that I, JEAN PAISSEAU, a citizen of the Republic of France, and residing at Paris, Seine Department, No. 53 Rue de Chateaudun, in the Republic of France, manufacturer, have invented certain new and useful Machines for Varnishing Beads, of which the following is a specification.

This invention relates to a machine for applying varnish or a like coating to beads of glass or enamel in a convenient, rapid and perfectly regular manner and is a division of the pending application for a similar machine by the same inventor, Serial No. 510,271, filed October 25, 1921.

To this end, the beads are mounted upon wires stretched between the cheeks of a barrel rotating opposite an atomizer having a reciprocating motion; the said wires are given a continuous rotation upon the said barrel. The atomizer will produce at each movement to the end of the stroke in either sense, a partial rotation of the said barrel whereby all the rows of beads are successively brought opposite the spray of atomized varnish.

The accompanying drawing shows by way of example a machine according to the invention.

Fig. 1 is a cross section.

Fig. 2 is a longitudinal section.

A frame supports by the bearings 101, 102 the journals 103 of a barrel constituted by the two cheeks 106, 107. The said barrel is provided with the wires 105 stretched between the said cheeks and carrying the beads 108. The wires 105 are secured to the rods 109, 110 which are revoluble in the cheeks 106, 107 and are secured to the gear wheels 111, 112.

The rods 110 are provided with a tension device comprising for instance the nuts 113 bearing upon the springs 114. The drums 115, 116 are loosely mounted upon the journals 103. They are provided with the toothed portions 117, 118 engaging respectively the gear wheels 119, 120, mounted on a shaft 121 driven by means of a pulley 122.

The drums are further provided with toothed portions 123, 124 engaging respectively the gear wheels 111, 112. In this manner, when the pulley 122 is rotated, the drums 115, 116 will rotate together with the wires 105. The frame 100 is provided with the rods 125, 126 having slidable thereon the carriage 127 carrying the atomizer 128. The said atomizer is mounted upon a rack rod 129 which is actuated by the gear wheel 130. The carriage 127 is provided with a slide 131 engaging an extension 132 of a bolt 133 pertaining to an endless chain 134. The said chain is supported upon two sprocket wheels 135, 136, and the wheel 135 is driven by means of a cone brake 137 from a shaft 138 carrying the pulley 139.

It will be seen that under these conditions when the pulley 139 is rotated, the carriage 127 is given a continuous reciprocating movement in front of the said beads; when moving upon the gear wheels 135, 136, the extension 132 will slide in the said slide 131 thereby providing for the driving action and the reverse motion.

The carriage 127 is provided with a cam 140 which serves when the atomizer reaches the end of the right hand stroke Fig. 2 to raise a finger 141 pivoted at 142. The said finger is provided with a pivoted pawl 143 acting upon a ratchet wheel 144 effecting by means of the gearing 145 and 146 the rotation of the cheeks 106, 107. In this manner, each reciprocating movement of the atomizer causes the ratchet wheel 144 to be turned to the distance of one tooth and this movement is imparted to the barrel through the gearing 145 and 146 to give the barrel a corresponding rotary movement.

The finger 141 is provided with an extension 147 affording also a hand control of the same. The said barrel is almost entirely surrounded by a casing 104 having a longitudinal aperture 148 situated in front of the atomizer. On the opposite side, the said casing terminates in the shape of a nozzle leading to a pipe 149 for drawing off the vapors of varnish. As a rule, in order to prevent the atomizer spray from reaching the beads which are situated at the opposite part and are becoming dried, a screen 150 is disposed within the said barrel. To secure the barrel in the fixed position at each step, a spring bolt 151 engages the suitable cut-out portions 152. Instead of employing a single movable atomizer, the apparatus may be provided with a plurality of atomizers with stationary axles disposed opposite the said barrel; such atomizers may be stationary or may be adapted to swing upon the axles.

A single swinging atomizer may even be used, this being disposed at a sufficient distance from the barrel.

Claims—

1. A machine for the varnishing of beads comprising a series of wires upon which the said beads are mounted, a rotatable barrel having the said wires disposed thereon, an atomizer movable in front of the said barrel, a carriage carrying the said atomizer, and means imparting to the said carriage a reciprocating motion parallel to the said wires.

2. A machine for varnishing beads, comprising a set of wires having the beads to be varnished disposed thereon, a revoluble barrel having the said wires secured thereto, an atomizer movable in front of the said barrel, a carriage having the said atomizer mounted thereupon, an endless chain disposed in front of the said carriage, two sprocket wheels driving the said chain, a stud secured to the said chain, and a slide disposed upon the said carriage and cooperating with the said stud.

3. A machine for varnishing beads, comprising a set of wires having the beads to be varnished disposed thereon, a revoluble barrel having the said wires secured thereto, an atomizer movable in front of the said barrel, a carriage having the said atomizer mounted thereupon, a cam disposed upon the said carriage, and means actuated by the said cam and adapted to rotate the said barrel at each end of the stroke of the carriage.

In testimony that I claim the foregoing as my invention I have signed my name.

JEAN PAISSEAU.