(No Model.) 2 Sheets—Sheet 1.

E. E. RENSHAW & T. J. CLANAHAN.

DITCHING MACHINE.

No. 456,521. Patented July 21, 1891.

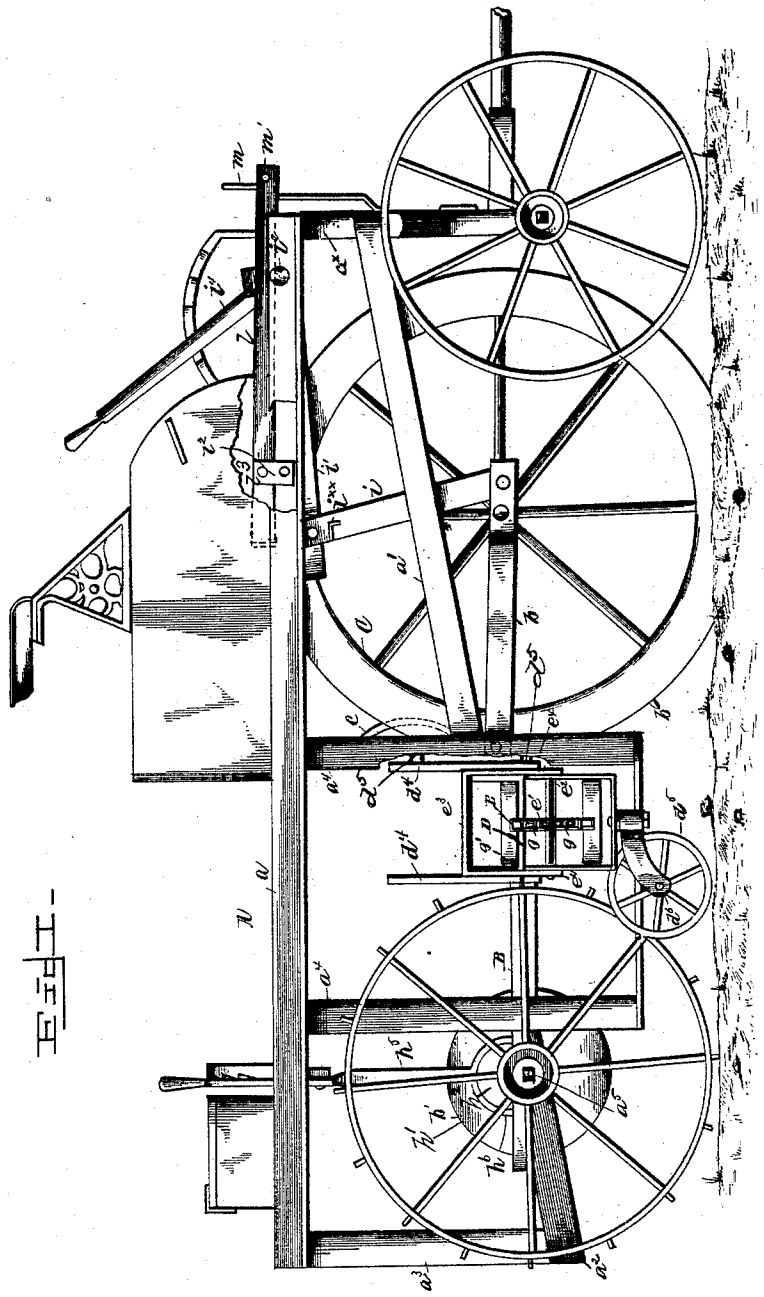

Witnesses
Paul W. Stevens
Mercer Myers

Inventor
Elmer E. Renshaw
Thomas J. Clanahan
By Myers & Co Attorneys

THE NORRIS PETERS CO., PHOTO-LITHO., WASHINGTON, D. C.

(No Model.) 2 Sheets—Sheet 2.

E. E. RENSHAW & T. J. CLANAHAN.

DITCHING MACHINE.

No. 456,521. Patented July 21, 1891.

Fig. 2.

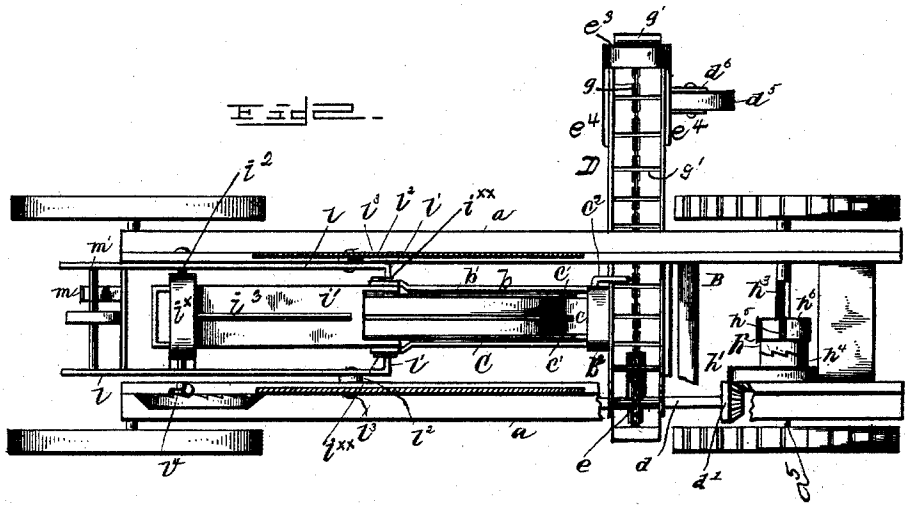

Fig. 3.

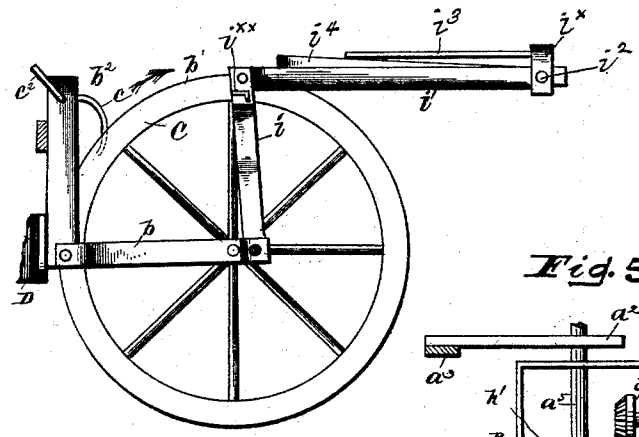

Fig. 5.

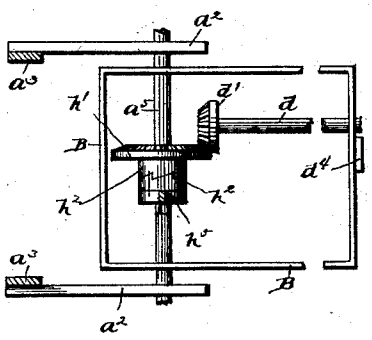

Fig. 4.

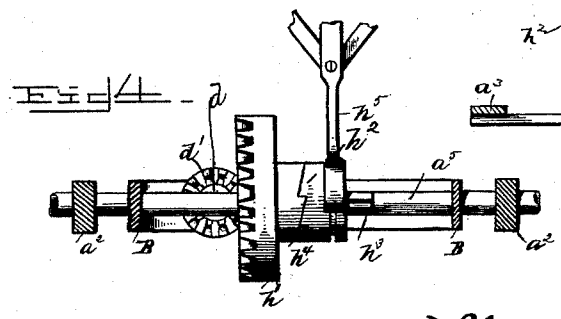

Witnesses:
Paul W. Stevens.
Mercer Myers.

Inventor
Elmer E. Renshaw
Thomas J. Clanahan
By Myers & Co. Attorneys.

THE NORRIS PETERS CO., PHOTO-LITHO., WASHINGTON, D. C.

UNITED STATES PATENT OFFICE.

ELMER E. RENSHAW AND THOMAS J. CLANAHAN, OF GOLCONDA, ILLINOIS.

DITCHING-MACHINE.

SPECIFICATION forming part of Letters Patent No. 456,521, dated July 21, 1891.

Application filed August 26, 1890. Serial No. 363,114. (No model.)

To all whom it may concern:

Be it known that we, ELMER E. RENSHAW and THOMAS J. CLANAHAN, citizens of the United States of America, residing at Golconda, in the county of Pope and State of Illinois, have invented certain new and useful Improvements in Ditching-Machines, of which the following is a specification, reference being had therein to the accompanying drawings.

Our invention pertains to an improvement in ditching-machines, whereby a ditch of any width or depth may be readily cut and the earth taken therefrom thrown to one side thereof automatically.

A further object of our invention is its efficient operation on undulating ground and greater simplicity of mechanism, as will more fully be described in the following specification and shown in the accompanying drawings, in which—

Figure 1 is a side elevation of our invention in operation. Fig. 2 is a plan view thereof, the top frame or cover being in section. Fig. 3 is a detail view of the cutting or flanged wheel. Fig. 4 is a side elevation of the rear axle and the gearing thereon. Fig. 5 is a detailed horizontal section showing more especially the frame B and adjacent parts.

In the embodiment of our invention we employ frame A, composed of horizontal bars a a, inclined bars a' a^2, and the vertical uprights a^3, a^4, a^4, and $a^\times$, forming the forward end supports of the bars a a'. The rear traction-wheels have their axle a^5 bearing in the inclined bars a^2 a^2 on either side of the frame. Having its rear end pivotally supported upon said axle is a supplemental or inner frame B, which is approximately rectangular-shaped and has its forward end secured to one of the two uprights or bars d^4, the other of said uprights or bars being secured to cross-pieces d^5, fastened to the bars a^4, as in Fig. 1.

Between two parallel bars b, secured to the bars a^4, is journaled the cutting or flanged wheel C, which may be made of any desired width, and has formed on its periphery (or it may be cast in one piece) a number of sharpened flanges b' b', spaced apart and running parallel with one another around said wheel's periphery, which cut into the earth, causing it to fill the spaces between said flanges, thus elevating it until it comes in contact with the spring-scrapers c, pivoted between the upper ends of an approximately inverted-U-shaped frame b^2, rigidly attached at its lower ends to the bars b b. Scraper c is formed in the manner of a fork, having a number of tongues c' c', corresponding to the number of the spaces between the flanges b' b', in which spaces said tongues are designed to project and where they may be adjusted by means of a lever c^2, which is connected to its shaft. Thus it is obvious that by adjusting the scraper c, with its tongues c', by properly manipulating its lever c^2 so as to more or less remove said tongues away from the periphery of the wheel C, the depth of cutting can be regulated, since the farther the tongues are distanced from the wheel the less of the adhering dirt will be taken from the wheel. Consequently thereafter the less will be the depth of penetration of the cutting-flanges b' of the latter. Vice versa, the closer the said tongues are brought to the periphery of the wheel the greater the amount of adhering dirt will be removed. Consequently thereafter the greater the depth of penetration of said cutting-flanges. The purpose of the scraper c is to throw the earth elevated by the flanged wheel C into a trough D, pivoted upon a shaft d, suitably supported in the frame B, said trough being held between the bars d^4 d^4. The trough D extends on one side of the machine for some distance and is supported at its outer end by means of a small wheel d^5, pivoted in a frame d^6, depending beneath the trough D.

Arranged in either end of the trough D are sprocket-wheels e e', the upper edges of said wheels being aligned horizontally with the bottom of the trough. The inner wheel e is journaled on the shaft d, and the outer one e' is journaled on a shaft e^2, secured in a frame e^3, having arms e^4 e^4, secured to the sides of the trough D.

Encompassing the wheels e e' is a sprocket or elevating chain E, composed of short pivoted links g g, to which are secured vertically, at equal intervals, plates or strips g', conforming in width to that of the trough D and having their lower edges bearing against the bottom thereof, thus carrying all the earth emptied

therein to the outer end of said trough, where it is deposited or expelled at one side of the ditch.

The sprocket or elevating chain E is operated by means of driving mechanism consisting of the pinion d', carried by the shaft d, and geared to a larger gear-wheel h', journaled loosely upon the rear axle a^5 and caused to revolve therewith by means of a ratchet-clutch h^2, sliding on a rectangular portion h^3 of the axle a^5, which clutch engages a corresponding clutch h^4, cast integral with the gear-wheel h', and is adapted to be actuated by the lever h^5, of ordinary construction. Having their lower ends pivoted to the forward ends of the bars b are two vertically-inclined bars or uprights i i, having pivoted thereto one end of plate i', which is pivoted at its other end on a shaft i^2, journaled in the bars a a of the frame A. Adapted to bear upon the plate or bar i' is a stout spring-rod i^3, firmly secured to the yoke or frame $i^\times$, journaled upon the shaft i^2 and having secured thereto a lever i^4, engaging a segmental rack on the side of the machine. Thus by operating the lever i^4 in the proper direction the pressure upon the wheel C may be increased or lessened, as desired, according to the density or hardness of the soil, since the pressure thus exerted upon the plate i' through said lever will act to force the axle with the wheel downward.

During the transportation of the machine the wheel C may be raised or lowered by means of two parallel bars l l, having their ends turned inward at right angles thereto at l' l', which ends engage approximately L-shaped flanges $i^{\times\times}$ $i^{\times\times}$ projected from the outer sides of the uprights i i, near the upper ends thereof, the bars l l being pivoted near one end to links l^2 l^2, pivoted in turn to the frame A at l^3, said bars l l being held in an elevated position by means of a spring m engaging a rod m', connecting the front ends of the bars l l. This is obvious from the fact that by pressing downward upon the outer ends of the bars l l the inner ends of the latter are caused to engage and exert upward pressure upon the flanges $i^{\times\times}$ $i^{\times\times}$, lifting the uprights i with the axle and wheel C.

Having thus fully described our invention, what we claim, and desire to secure by Letters Patent, is—

1. In a ditching-machine, the combination of the cutting-wheel pivoted to the frame of the machine, the plate bearing on said wheel, and the spring bearing against the upper face of the plate, substantially as shown and described.

2. In a ditching-machine, the combination of the cutting-wheel, the plate bearing on said wheel, and the spring bearing against the upper face of said plate, actuated by means of a lever, substantially as shown and described.

3. In a ditching-machine, the combination of the cutting-wheel pivoted between the parallel bars, the vertically-inclined uprights connected thereto, and the bars l l, pivoted to the frame A, substantially as shown and described.

4. In a ditching-machine, the combination of the cutting-wheel pivoted between the parallel bars, the vertically-inclined uprights connected thereto, and the bars l l, pivoted by means of short links to the frame A and carrying a rod in their forward ends, which engages a spring, substantially as shown and described.

5. In a ditching-machine, the combination of the cutting-wheel pivoted between the parallel bars, the vertically-inclined uprights connected thereto, having the L-shaped flanges on their upper ends, and the bars l l, pivoted by links to the frame A and having their inner ends turned inward at right angles thereto and carrying a rod in their forward ends, which engages a spring, substantially as shown and described.

In testimony whereof we affix our signatures in presence of two witnesses.

ELMER E. RENSHAW.
THOMAS J. CLANAHAN.

Witnesses:
J. M. HART,
F. M. BRIDGES.