May 20, 1969 C. H. COVINGTON 3,444,799

AIR CIRCULATING MEANS FOR A PATIO TABLE AND UMBRELLA THEREFOR

Filed Nov. 6, 1967

FIG. 1

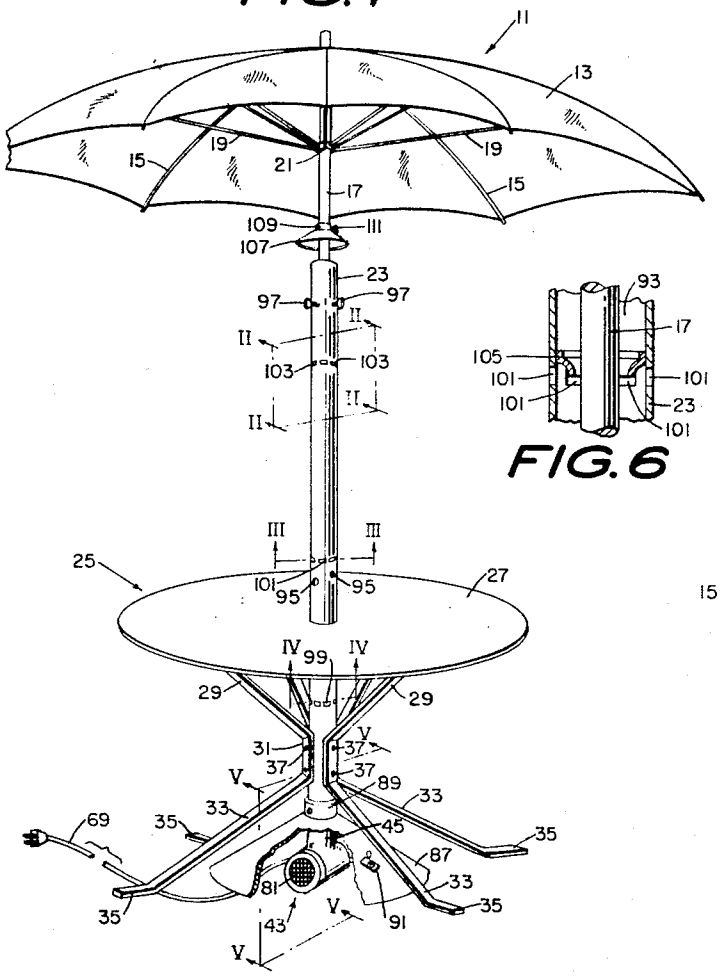

FIG. 6

FIG. 2

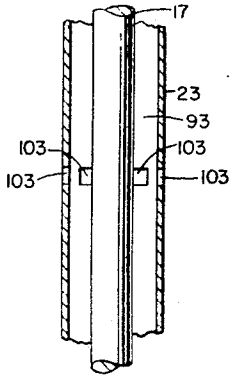

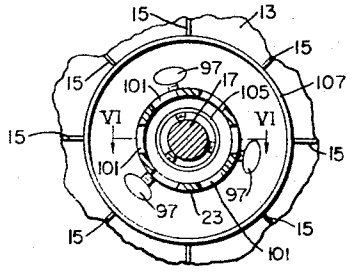

FIG. 3

FIG. 5

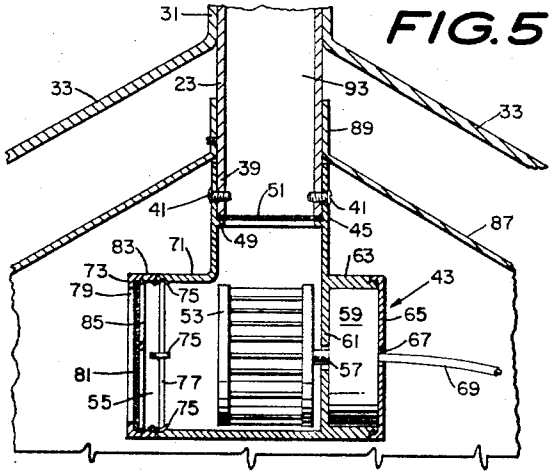

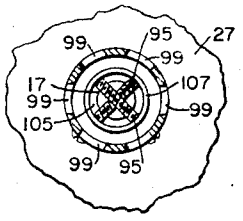

FIG. 4

INVENTOR,
Charles H. Covington

BY Wheatley Ford & Wheatley Ford
Attys

United States Patent Office 3,444,799
Patented May 20, 1969

3,444,799

AIR CIRCULATING MEANS FOR A PATIO TABLE AND UMBRELLA THEREFOR

Charles H. Covington, 1020 Malvern Ave., Hot Springs, Ark. 71901

Filed Nov. 6, 1967, Ser. No. 680,643
Int. Cl. F24f 7/00; A45b 3/00
U.S. Cl. 98—1 10 Claims

ABSTRACT OF THE DISCLOSURE

An apparatus for circulating air beneath a patio umbrella having a fan positioned at the lower end of a cylinder encircling the umbrella shaft to force a draft of air upwardly through the cylinder and against a deflector above the cylinder which directs the circulating air downwardly throughout the area beneath the umbrella canopy.

BACKGROUND OF THE INVENTION

Field of the invention

The present invention relates to air circulating means for umbrellas, and more particularly to air circulating means directed through positioned vented means along the interior of a cylinder employing forced draft means for urging the circulating air therethrough. The present invention additionally provides means for directing circulating air to positioned vent means therealong and deflector means therein to discharge the circulating air in and over a number of selected areas.

DESCRIPTION OF THE PRIOR ART

There have been prior similar devices utilizing forced draft means for circulating air beneath the canopy of an umbrella, but none of these prior devices have provided forced draft means for controllably moving air unidirectionally upwardly in alinement with the umbrella staff. These prior devices have additionally been unable to provide circulated air to more than one selected area under the canopy of a patio umbrella.

The device of the present invention further provides means for utilizing the air distribution means as a support for the umbrella staff.

A preliminary search disclosed the following reference: 3,177,881, C. H. Covington, Apr. 13, 1965.

SUMMARY OF THE INVENTION

The present invention provides means for circulating air in a selected area under the canopy of an umbrella.

The present invention further provides fan means mounted beneath an upstanding vented cylinder for moving the substantially cooler air at ground level upwardly through the cylinder and outwardly therefrom to the area covered by the canopy of an umbrella, having its staff supported substantially vertically by the upstanding cylinder.

The present invention additionally provides deflecting means for the air moving upwardly through the upstanding cylinder, the deflecting means attached to the staff of the umbrella externally above the top of the cylinder.

The present invention also provides filter means adjacent the fan means for preventing undesired materials and debris from mingling with the air being circulated from the fan upwardly through and beyond the cylinder, and shielding means surrounding the fan means to protect the fan means from damage.

OBJECTS OF THE INVENTION

The principal object of the present invention is to provide means for circulating air beneath the canopy of an umbrella.

Another object of the present invention is to provide fan means for circulating air beneath the canopy of an umbrella.

A further object of the present invention is to provide a cylinder for moving air from a fan to a selected area beneath the canopy of an umbrella.

Another object of the present invention is to provide vent means for directing air from a cylinder outwardly beneath the canopy of an umbrella.

A further object of the present invention is to provide deflector means for selectively directing circulating air beneath the canopy of an umbrella.

Another object of the present invention is to provide an air carrying cylinder with means included therein to support the staff of an umbrella positioned therein; and

A further object is to improve the design, construction and efficiency of air circulating means for umbrellas.

DESCRIPTION OF THE DRAWINGS

The means by which the foregoing and other objects of the present invention are accomplished and the manner of their accomplishment will be readily understood from the following specification upon reference to the accompanying drawings, in which:

FIG. 1 is a perspective view of the device of the present invention.

FIG. 2 is a fragmentary vertical cross-sectional view of the device of FIG. 1 as taken on the line II—II of FIG. 1.

FIG. 3 is a fragmentary transverse cross-sectional view of the device of FIG. 1 as taken on the line III—III of FIG. 1.

FIG. 4 is a fragmentary transverse cross-sectional view of the device of FIG. 1 as taken on the line IV—IV of FIG. 1.

FIG. 5 is a fragmentary vertical cross-sectional view if the device of FIG. 1 as taken on the line V—V of FIG. 1; and

FIG. 6 is a fragmentary vertical cross-sectional view of the device of FIG. 1 as taken on the line VI—VI of FIG. 3.

DESCRIPTION OF THE PREFERRED EMBODIMENT

Referring now to the drawings in which the various parts are indicated by numerals, the present invention comprises an umbrella **11** provided with a canopy **13** formed of fabric or similar material mounted upon and attached to a plurality of circumferentially positioned radially disposed rib members **15**. The canopy **13** is embracingly attached to a staff **17** substantially at the center of the canopy **13** extending slightly above the canopy **13**. The ribs **15** are provided with support arms **19** hingedly affixed at one of their ends to the ribs **15** substantially medially thereof, extending inwardly therefrom into pivotal engagement with the collar **21** slidably attached to the staff **17**.

The present invention further comprises an elongated cylinder **23**, best illustrated in FIG. 1 of the drawings, concentrically surrounding the staff **17**, positioned somewhat below the top thereof in axial alinement therewith, and depending downwardly below the bottom of the staff **17**. As shown in FIG. 2, cylinder **23** is spaced from staff **17** having an open upper end for the insertion of the staff **17** therein. A patio table **25**, including a table top **27**, table legs therefor provided with table supporting portions **29**, angularly offset central sections **31**, leg members **33** attached to the off-set sections and extending angularly downwardly therefrom, and foot portions **35** integrally connected to the distal ends of the leg members **33** to support the table **25** in an upright position for use.

The central sections **31** of the table legs are provided

with bolt means 37 for attaching the central sections 31 to the cylinder 23 to further support and maintain the cylinder 23 in a substantially vertical position relative to the table top 27.

Offset central portions 31 are provided with bolt means 37, threadedly engaged therewith and extending radially inwardly thereof to bear against and maintain a portion of the cylinder 23 peripherally therein to further support and hold the cylinder in a substantially vertical position relative to the table top 27. The cylinder 23 additionally comprises a base section 39 depending from the offset central sections 31 to provide attachment means thereto, as by the bolts 41 spaced in diametrically opposite alinement, of the fan housing 43 therebelow.

The fan housing 43 is provided with an upwardly extending throat 45 in overlying circumferential abutment with the cylinder base section 39, and is detachably connected thereto by the bolts 41. The throat 45 is provided with an internally disposed annular shelf 49 positioned below the bolts 41, and beyond the lowermost end of the cylinder base 39, for the retention upon the upper surface of a disc-like perforate grid 51. The perforate grid 51 is provided for trapping and preventing debris and similar material within the cylinder 23 from falling therebeyond into the housing 43 against the fan 53 in the inner chamber 55 of the housing 43.

The fan 53 is attached to a shaft 57 extending rearwardly thereof into attachment with the fan motor 59. The housing 43 is further provided with partition means 61 interposed between the fan 53 and the fan motor 59, centrally apertured to permit the fan shaft 57 to extend therethrough from the fan motor 59 into attachment with the fan 53. The rearmost end of the housing 43 is additionally provided with a closure 63 to contain the fan motor 59 therein and a closure cap 65 in threaded engagement therewith. The closure cap 65 is provided with an opening 67 for the passage therethrough of the electrical cable 69 extending from the fan motor 59 into connection with a suitable source of electrical power (not shown).

The present invention further comprises air intake means 71 integrally attached to the forward end of the housing 43, of substantial cylindrical configuration, a face plate 73, detachably connected to the air intake means 71 by the undulating clips 75 engaging the annular groove 77 attached to the internal periphery of the air intake means 71, and an orifice 79 formed in the forward end of the face plate 73 to provide for the uniterrupted passage of air therethrough into the chamber 55 of the housing 43. The face plate 73 is further provided with a substantially circular screen 81 positioned somewhat rearwardly of the orifice 79 peripherally adjacent the rim portion 83 of the face plate 73 and is rigidly maintained against the rim portion 83 by the snap ring 85 disposed peripherally rearwardly of the circular screen 81.

The present invention additionally comprises a substantially conical shield 87 surrounding the housing 43, having a collar 89 in detachable embraceable engagement with the base section 39 of the cylinder 23 positioned somewhat above the throat 45, and includes a switch 91 interposed in one of the leads of the cable 69 for energizing the fan motor 59.

In the use of the device the fan motor 59 is energized by the switch 91 causing the fan 53 to rotate on the shaft 57 moving air through the orifice 79, the screen 81, the air intake 71, and into the inner chamber 55 of the housing 43. The fan 53 urges the air in the chamber 55 upwardly therefrom through the throat 45 and into the cylinder 23.

The cylinder 23 is provided with an internally defined air passage 93 substantially coextensive in length with the cylinder 23 and in surrounding adjacency with the umbrella staff 17 interposed therein and lying along the vertical axis thereof. A pair of bolts 95, in overlying perpendicular relation to each other, are provided by the cylinder 23 to support the base of the umbrella staff thereupon. The umbrella staff 17 is further maintained in rigid spaced relation with the air passage 93 and the cylinder 23 by a plurality of wing bolts 97, in threaded engagement with the cylinder 23, positioned somewhat below the top thereof and extending radially inwardly through the air passage 93 into abutting contact with the staff 17.

The cylinder 23 further comprises a plurality of circumferentially spaced apertures 99 positioned somewhat below the table top 27 to direct a portion of the air ascending in the passage 93 outwardly therefrom to circulate in the area below the table top 27.

A like series of circumferentially spaced apertures 101, carried by the cylinder 23 somewhat above the table top 27, are provided for directing air outwardly from the air passage 93 across the upper surface of the table top 27.

Another like series of circumferentially spaced apertures 103 carried by the cylinder 23 somewhat below its top portion is provided for venting air from the passage 93 outwardly therefrom into the area under the canopy 13.

The apertures 99, 103, are provided with annular baffle means 105 having a substantially arcuate cross sectional configuration, spaced away from the staff 17 in the cylinder 23 somewhat above the apertures 99, 103, to facilitate and more accurately direct the flow of air from the passage 93 through the apertures 99, 103, and outwardly, downwardly therebeyond as best illustrated in FIG. 6.

The present invention is additionally provided with a substantially frusto-conical deflector 107 including an attachment collar 109, affixed to the apex thereof, and preferably adjustably attached to the umbrella staff 17 below the canopy 13 and above the top of the cylinder 23 to direct the air discharged from the upper end of the cylinder 23 outwardly and downwardly below the canopy 13 and above the table top 27. The attachment collar 109 is provided with a thumb bolt 111, threadedly engaged therewith for selectively positioning the deflector 107 on the umbrella staff 17 between the top of the cylinder 23 and the slidable collar 21 of the umbrella 11 as desired by the user.

It will be further readily seen that when it is desired to direct the air stream in the passage 93 through the apertures 99, 101, 103, the deflector 107 may be positioned in superjacent abutment with the top of the cylinder 23 preventing the air in the cylinder 23 from moving further upwardly therebeyond, while effecting outward diffusion of the moving air through the apertures 99, 101, 103 of the cylinder 23.

It will be understood that the cylinder 23 may be of the approximate dimensions as shown in the drawings or may be more abbreviated above the table top 27 to suit the convenience of the user without departing from the scope of the present invention. It will be further understood that if the abbreviated form of the present invention is desired, the portion of the cylinder 23 extending above the table top 27 must be of a sufficient length to include the peripheral apertures 101.

I claim:

1. In combination with an umbrella including a canopy therefor, means supporting said canopy, and an umbrella staff,

(A) air circulating means comprising:
  (1) an elongated cylinder concentrically surrounding said umbrella staff,
  (2) an air passage defined internally of said elongated cylinder,
  (3) means for holding said umbrella staff in spaced axial alinement with said elongated cylinder within said air passage,
  (4) said cylinder being perforated to provide a plurality of air discharge vents from said air passage externally of said cylinder,

(B) a table comprising:
  (1) a table top, said cylinder extending through and below said table top,

(2) table top support means,

(3) means connecting said table top support means to a portion of said elongated cylinder below said table top,

(C) forced draft means communicating with and attached to the base of said elongated cylinder for urging flow of air into said air passage within said elongated cylinder outwardly through said vents and upwardly therebeyond, including:

(1) a housing connected to a lower portion of said cylinder below said table top,

(2) fan means within said housing for causing said air flow.

2. Means in accordance with claim 1, wherein said cylinder is upwardly open and said air circulating means is provided with an air deflector adjustably affixed to said umbrella staff above the open upper end of said elongated cylinder.

3. Means in accordance with claim 1, wherein said housing is provided with shield means, said shield means affixed to said base of said elongated cylinder adjacent said housing.

4. Means in accordance with claim 3, wherein said shield means are formed in frusto-conical configuration.

5. Means in accordance with claim 1, wherein said air circulating means is provided with a first filter means, detachably connected to said air intake means of said housing and a second filter means inserted in said throat of said housing.

6. Means in accordance with claim 1, in which said plurality of air discharge vents are arranged in a multiplicity of series of circumferentially disposed vents.

7. Means in accordance with claim 6, in which at least one of said series of air discharge vents is disposed below the level of said table top.

8. Means in accordance with claim 6, in which said multiplicity of series of horizontally disposed air discharge vents are vertically spaced apart along said cylinder.

9. Means in accordance with claim 2, in which said air deflector is adjustably mounted on said staff for movement toward and away from the open upper end of said cylinder to effect control of discharge through said cylinder upper end.

10. Means in accordance with claim 6, in which said cylinder includes baffle means adjacent each of said series of vents and spaced from said staff.

References Cited

UNITED STATES PATENTS

2,488,467	11/1949	De Lisio	98—1
2,727,366	12/1955	Hagen	135—16
3,177,881	4/1965	Covington	135—16
3,228,317	1/1966	Westman	98—1

LLOYD L. KING, *Primary Examiner.*

U.S. Cl. X.R.

135—16