Nov. 30, 1971 E. H. KELLY 3,623,285

BUILDING CONSTRUCTION MODULE

Filed Sept. 26, 1969 2 Sheets-Sheet 1

FIG. 1

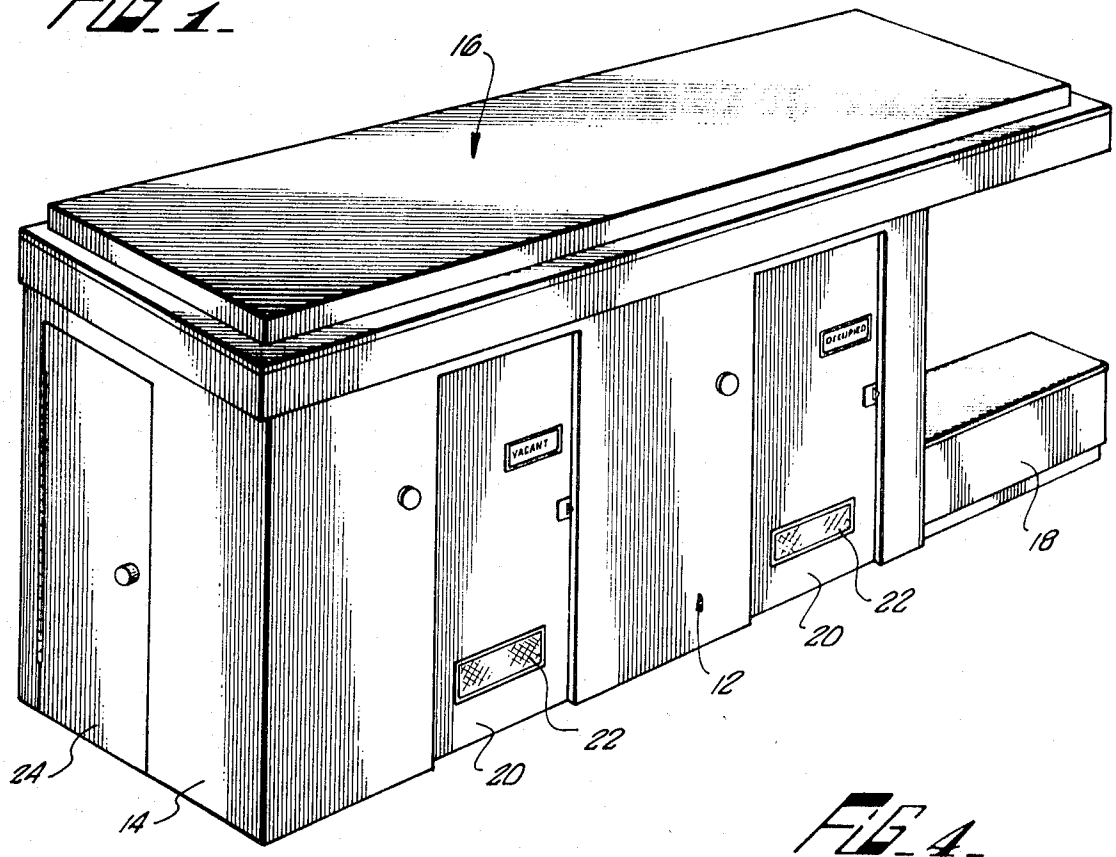

FIG. 4

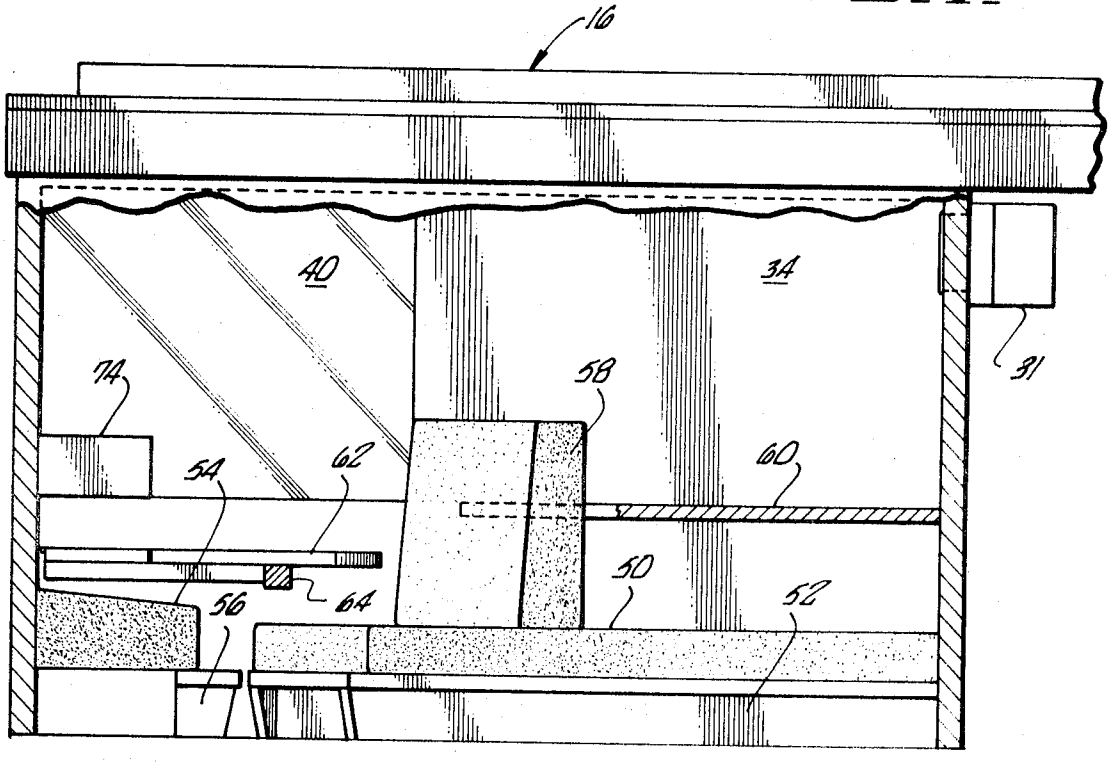

Nov. 30, 1971 E. H. KELLY 3,623,285

BUILDING CONSTRUCTION MODULE

Filed Sept. 26, 1969 2 Sheets-Sheet 2

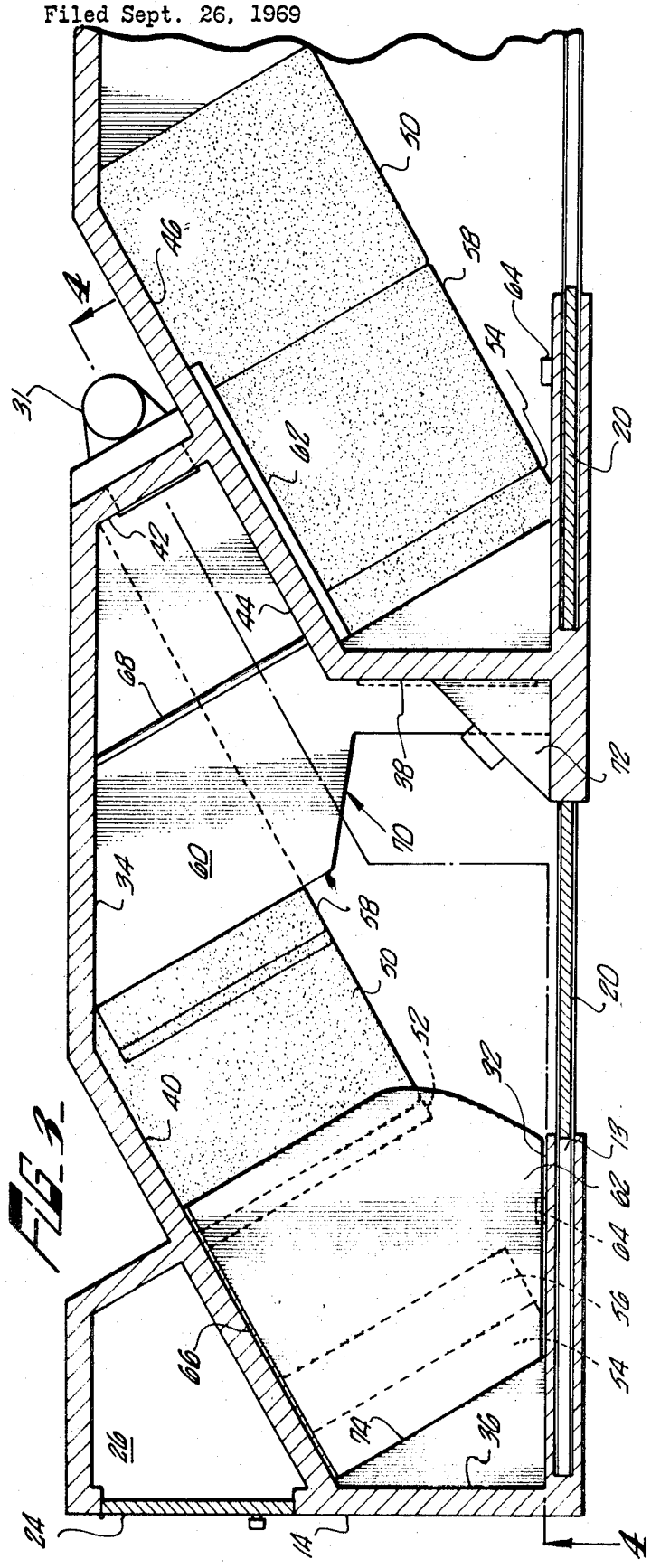

FIG. 3

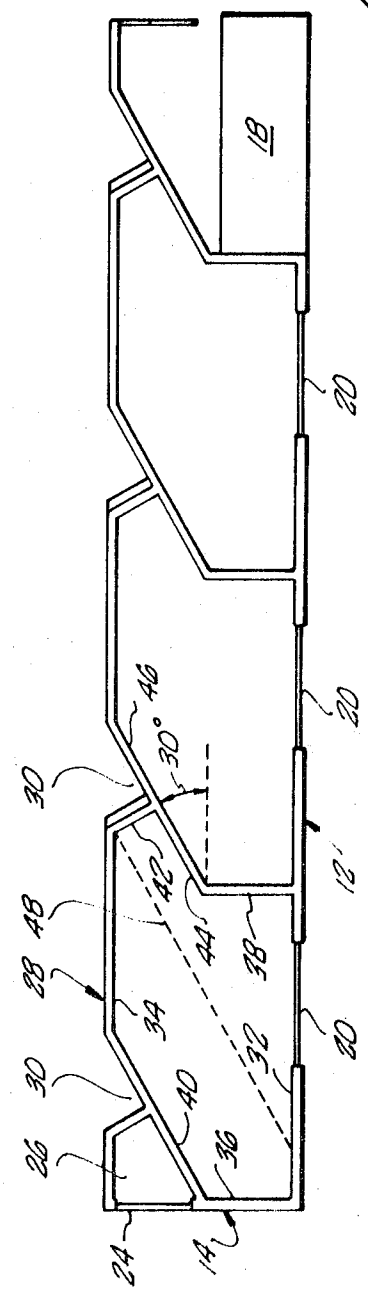

FIG. 2

INVENTOR.
EDWARD H. KELLY
BY Lyon Lyon
ATTORNEYS.

United States Patent Office 3,623,285 Patented Nov. 30, 1971

3,623,285

BUILDING CONSTRUCTION MODULE

Edward H. Kelly, Los Angeles, Calif., assignor to S.A.C. Electronics, Inc., Los Angeles, Calif.

Filed Sept. 26, 1969, Ser. No. 861,282
Int. Cl. E04h 3/02
U.S. Cl. 52—36 4 Claims

ABSTRACT OF THE DISCLOSURE

The present invention provides a building construction to be offered in the form of variously sized modules consisting of a plurality of rooms principally to be installed in airports and depots to afford a temporary sleeping or working area for rent. The principal feature of the design of the building construction is the way in which the interior of each room is oriented so as to optimize the useful space without creating an unnecessarily large size for the overall structure. Each room consists of a bed of size sufficient to accommodate a seven foot person and is convertible into a desk and working area complete with telephone, storage space for luggage and clothing plus suitable lighting and ventilation.

BACKGROUND OF THE INVENTION

Modern transportation facilities, particularly the large international airport terminals, are frequently located some distance from population centers for a number of reasons. Although transportation facilities are adequately provided, and hotel accommodations also are conveniently located, no facilities of a temporary nature have ever been provided at such transportation terminals other than the typical overnight hotel or motel type accommodations. Frequently a passenger will have a few hours between plane connections and while it would be unnecessary to acquire an overnight hotel accommodation, it is equally unpleasant to sit and wait around the terminal. Additionally, traveling salesmen who have a number of calls to make in a particular town, upon arriving at the airport usually must make a number of calls in order to set up their appointments for the next day. In order to do this they must conduct a good deal of their business in a telephone booth. No adequate facilities have been provided to accommodate the various needs of these type of of passengers.

SUMMARY OF THE INVENTION

The present invention has as its principal purpose accommodations which can be rented by passengers at transportation terminals to be used for short periods of time either to rest or relax, take a short nap, or as a work space to conduct business and make telephone calls.

The present invention provides a unique design for accommodations of this type in the form of modularly constructed units having a plurality of rooms designed to be installed inside airport and depot terminal buildings. Because the installation of these units utilizes floor space in the terminal, and since such terminals commonly lease or rent their floor space on a square footage basis, and sometimes upon a formula based upon the number of feet used away from the wall, the unique design of the present invention utilizes a minimum of floor space, and particularly extends an absolute minimum of space away from the wall while still accommodating a bed sufficient for a seven foot person, a desk and working space, telephone, baggage, and clothing storage facilities, all without sacrificing comfort. The floor plan of each room has the bed and work space oriented on approximately a 30° angle to the back wall and it is this particular angle of orientation which permits the optimum utilization of space within each room. It is also contemplated that the various wall sections be fabricated so that the construction of each modular unit at the sight is facilitated.

It is an object therefore of the present invention to provide a new building construction unit in modules of various sizes to be erected at transportation terminals and the like to provide both sleeping and working space on a temporary basis.

Further objects and advantages of the present invention will be readily apparent upon reading the ensuing description of the invention.

DESCRIPTION OF THE DRAWINGS

FIG. 1 is a perspective view of the exterior of a typical building construction unit made in accordance with the present invention having only two rooms.

FIG. 2 is a floor plan of a typical construction unit having three rooms.

FIG. 3 is a sectional floor plan view of the unit showing the disposition of the various cushions and shelves therein.

FIG. 4 is a sectional elevational view taken along line 4—4 of FIG. 3.

DESCRIPTION OF THE PREFERRED EMBODIMENT

FIG. 1 shows the outer appearance of a typical construction unit. The number of rooms provided may vary as conditions exist but units will comprise at least two rooms. The unit consists of the front wall **12**, an end wall **14**, a roof **16** of any suitable configuration and a service counter **18**. It will be noted from viewing FIG. 2 that the end wall **14** provides a rectangular finish to the construction unit although the configuration of the floor plan of each room at not rectangular. In addition, it wil be noted that the provision of the service counter **18** provides a rectangular finish at the opposite end of the unit and takes advantage of the non-rectangular formation at the other end of the unit to provide counter space for an attendant. Thus, all possible use is made of a rectangular area of minimum dimension even though the orientation of the floor plans of the rooms is non-rectangular.

For further utilization of space, the entry doors **20** can be provided as sliding doors and ventilation outlets **22** are provided as will be more fully described subsequently. In the end wall **14** there is provided a door **24** giving access to closet space **26** in which utility and maintenance equipment may be stored for the unit. The back wall **28** of the unit is provided with a plurality of triangular recesses **30** which afford a ventilation duct area as shown in FIG. 3. This recess **30** can then be provided with a ventilator fan **31** (FIG. 3) or provide means for connecting the ventilation ducts with the ventilation system at the site.

The floor plan of each room is best shown in FIG. 2. The room consists of the parallel front and rear walls **32** and **34** and the partial end walls **36** and **38** which are also parallel and positioned at 90° to the front wall **32**. From the partial end wall **36** an angled lateral wall **40** connects to the back wall **34**. The lateral wall **40** makes an angle of 30° with respect to the front wall **32**. The partial end wall **38** is connected to wall **42** by a lateral wall **44** which is formed by a portion of wall **46** of the next room, this wall corresponding in that room to wall **40** of the first room. The area of each room laid off for bedding is designated by the dotted line **48**, and this line extends parallel to wall **40**. Thus, although a rectangular bedding area is not provided, it has been found that this 30° angle of orientation for the bedding area provides the optimum utilization of space within the room while permitting the bed to be of the greatest usable length. This is accomplished without sacrificing other

room within the space which can be used for the storage of luggage and other articles together with space for movement by the occupant.

Turning now to FIG. 3, the furnishings provided in each room include a cushioned bedding area **50** provided on a raised platform shown in FIG. 4 at **52**. A second short bedding area **54** is provided near the end wall **36** upon a second raised platform **56**. It will be noted that both the platforms **52** and **56** extend past the edges of the cushions **50** and **54** but are spaced apart to provide leg room therebetween. A separate cushion back **58** is shown in FIG. 3 being propped up against the edge of shelf **60** to provide a seat back. Desk top **62** is shown in the left side of FIG. 3 in its downwardly hinged position whereupon it is resting upon member **64** secured to wall **32** so that it is retained in a horizontal position. Desk top **62** is hinged at **66** to the lateral wall **40** whereby it can be positioned in the horizontal position or pivoted upwardly as shown in the right half of FIG. 3.

The right half of FIG. 3 shows a partial view of the room with the desk top **62** pivoted upwardly against wall **46** and the separate cushion **58** positioned between the ends of cushions **50** and **54** to provide a continuous bedding area. The desk top may be held in the vertical position by any suitable latch (not shown) or a magnet (not shown) as desired. It will be obvious that cushion **58** rests upon the extensions of platforms **52** and **56**. Shelf **60** is situated at the narrow end of each room above the foot of the bed and affords a storage space for luggage and other personal items. A coat rack **68** is mounted above shelf **60** extending from wall **44** to wall **34**. Arrow **70** indicates a storage space beneath shelf **60** and between wall **40** and the edge of the platform **52** where luggage may be also stored. The corner between walls **32** and **38** provides a convenient place for mounting a telephone **72** which would probably be a pay telephone for use by the temporary occupants of each room. At the juncture between walls **36** and **32** a convenient reading lamp **74** is mounted. In addition, it will be noted that wall **40** is preferably covered with a mirrored surface so as to enhance the effect of spaciousness within each room. FIG. 3 shows that the wall **12** of each room is provided with a sliding door **20** adapted to be moved into the interior space **13** formed therein. It should also be noted in FIG. 4 that the construction unit does not include a floor per se. It is contemplated that the units will be installed in buildings already having floors and it is one feature of the invention to attach the walls of the unit directly to the floor. This accomplishes some degree of cost economy. There are several known methods of securing the device to the floor, one of which is adhesive strips.

It will thus be seen that what has been described herein is a unique building unit which affords a space which may be rented for short periods of time to be used either as a small office or as a sleeping room and is convertible to both purposes. Suitable lighting is provided, perhaps in the ceiling, as well as the reading lamp **74** and suitable ventilation is provided by the fan **31** and the air ducts **22** provided in the doors. The angle of orientation of the bed is found to be of considerable importance. A change of more than 5° in the angle materially increases the depth of the construction unit and the overall square footage occupied thereby. It is calculated that the most economic use of the space provides for a total overall width or depth of the unit of four feet. The entire construction unit should not extend over four feet out from the wall of the building and this presents the most inexpensive rental situation for the amount of space required. It is obvious that the floor plan can be reversed to place the counter space **18** at the opposite end of the unit and that any number of rooms can be included as space permits.

While the accompanying description and the drawings illustrate one preferred embodiment of the present invention, it will be obvious that there are a number of changes and alterations which could be made without departing from the general concept of this invention. It is the aim of the appended claims to cover all changes, modifications and equivalents as fall within the true scope and spirit of this invention.

I claim:

1. A building construction module comprising:

exterior walls providing a generally rectangular floor plan configuration;

a plurality of rooms within said exterior walls, said rooms having floor plans which are substantially non-rectangular; some of said room being sleeping rooms, said sleeping rooms having a bed, said bed being oriented within said rooms at an acute angle with respect to the major axis of said module, each of said sleeping rooms having at least two parallel interior walls oriented at the same angle as said bed, said interior wall providing common walls for adjoining rooms;

each of said beds comprising a platform having first and second sections, said first section comprising the head, said second section comprising the foot, said sections being separated at a location closer to the head, first and second cushions covering said first and second platform sections except for the edges thereof which are closer said separation, a third cushion adapted to be positioned between said platform sections by resting upon said edges;

a desk top comprising a planar member having one edge hingedly mounted upon one of said interior walls, said member being movable to a vertical position against said wall or downward to a horizontal position, first means cooperating with said planar member for maintaining the same in its horizontal position, second means cooperating with said planar member for maintaining the same in the vertical position, said third cushion of said bed being removable to another location on said platform to a somewhat vertical position to provide a seat back, said platform having an open space between said platform sections operative to provide leg room space when said movable cushion is removed therefrom, whereby said hingeable desk top may be moved downwardly to provide a usable desk and working areas; and

a roof of generally rectangular configuration supported by said exterior walls.

2. The structure of claim **1** further including individual closure means for each room and ventilation means mounted upon the walls of each room.

3. A building construction module as described in claim **1** wherein the acute angle of said bed in each room is within 25° to 35°.

4. A building construction module as described in claim **1** wherein the angle of said bed and said interior angled walls is within 25° to 35°.

References Cited

UNITED STATES PATENTS

1,036,038	8/1912	Vosler	105—315
1,282,583	10/1918	Hunter	52—234 X
2,583,960	1/1952	Murphy	105—315
3,002,233	10/1961	Obata	52—237 X
3,118,187	1/1964	Alimanestiano	52—36 X
3,254,458	6/1966	Van der Lely	52—236 X
3,346,997	10/1967	Parrish	52—237 X

PRICE C. FAW, JR., Primary Examiner

U.S. Cl. X.R.

52—237