March 13, 1928. 1,662,153

C. E. LUCKE

CONDENSER

Filed Aug. 3, 1925 3 Sheets-Sheet 1

Fig. 1.

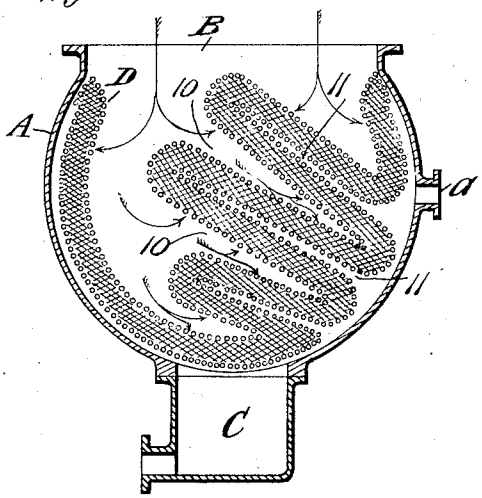

Fig. 2.

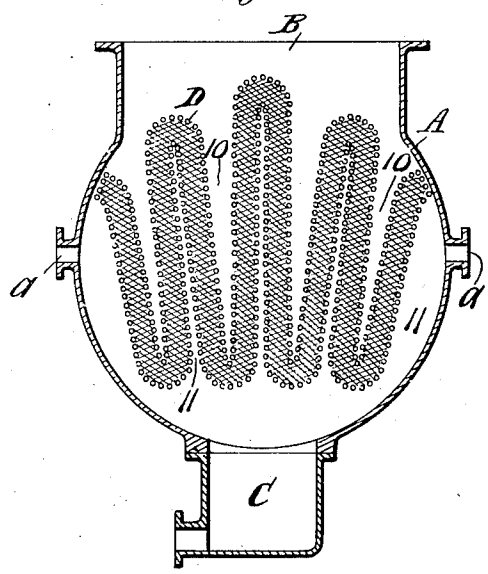

Fig. 3.

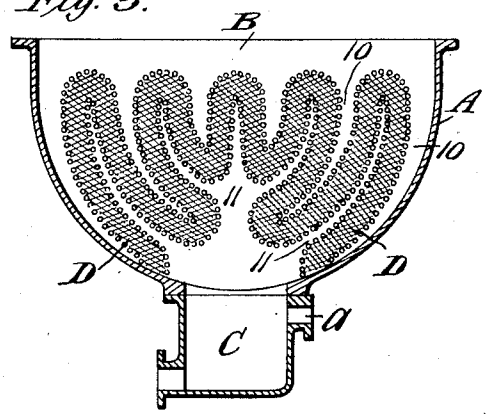

Fig. 4.

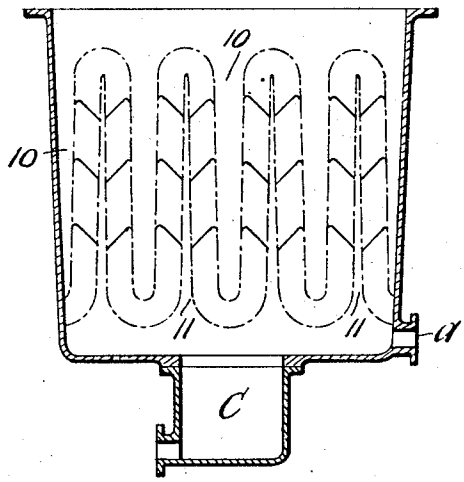

Inventor

Charles E. Lucke

By his Attorneys

Phelps Sawyer Reed & Kennedy

March 13, 1928. 1,662,153

C. E. LUCKE

CONDENSER

Filed Aug. 3, 1925 3 Sheets-Sheet 2

Fig. 5.

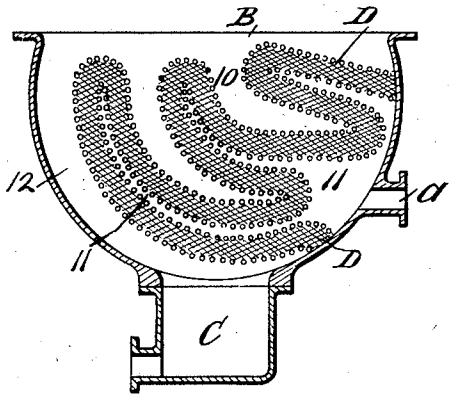

Fig. 6.

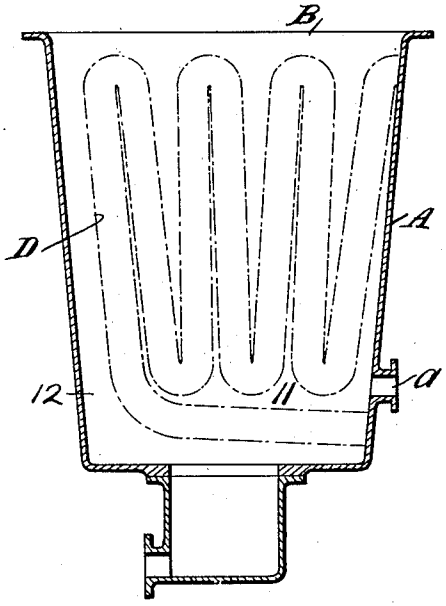

Fig. 7.

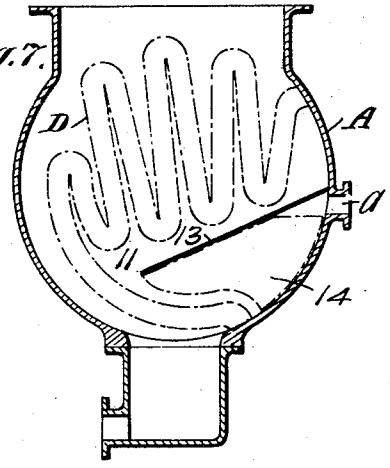

Fig. 8.

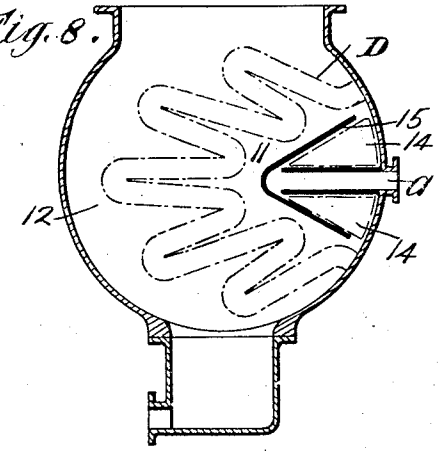

Fig. 9.

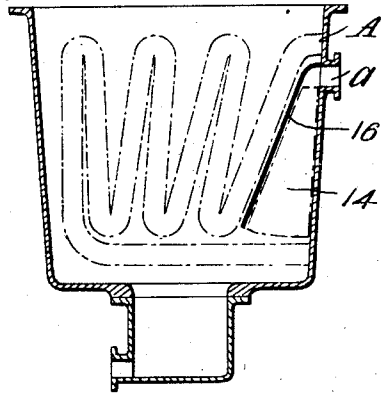

Inventor

Charles E. Lucke

By his Attorneys

Pierce, Scarborough & Kennedy

March 13, 1928. 1,662,153

C. E. LUCKE

CONDENSER

Filed Aug. 3, 1925 3 Sheets-Sheet 3

Fig. 10.

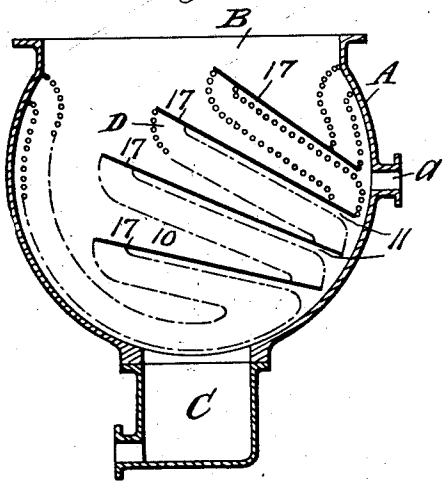

Fig. 11.

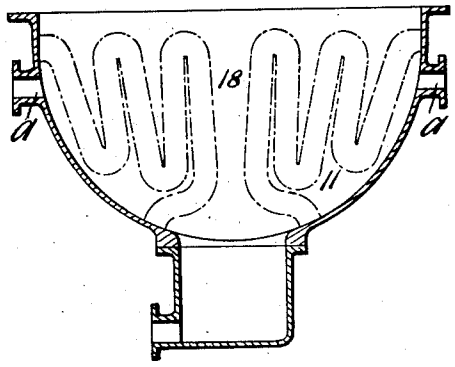

Fig. 12.

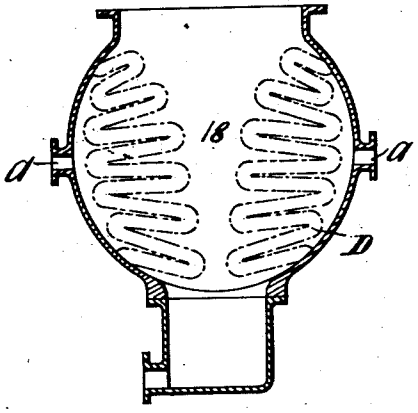

Fig. 13.

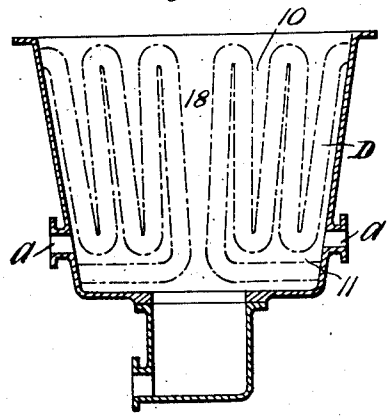

Inventor
Charles E. Lucke
By his Attorneys
Philip Sawyer Reed Reeves

Patented Mar. 13, 1928. 1,662,153

UNITED STATES PATENT OFFICE.

CHARLES E. LUCKE, OF NEW YORK, N. Y., ASSIGNOR TO WORTHINGTON PUMP AND MACHINERY CORPORATION, OF NEW YORK, N. Y., A CORPORATION OF VIRGINIA.

CONDENSER.

Application filed August 3, 1925. Serial No. 47,675.

This invention relates to steam condensers of the surface type, the especial object of the invention being to provide a construction of high vacuum surface condenser adapted especially for large sizes, in which each of the condenser tubes shall contribute the maximum area possible to active condensation of steam and thus reduce to a minimum the total tube surface required for a given rate of steam per hour.

In carrying out the invention, I aim especially to minimize the pressure drop between the tubes in the steam and air zones by a short path and by causing the steam to sweep all the tube surfaces substantially equally, so as to prevent any sluggish flow in any region, and to equalize the pressure drop across the steam flow paths between the tubes throughout the condenser by making these steam paths substantially equal in flow resistance. I aim, also, to present to the incoming steam a large percentage of the total condenser tubes so as to secure the maximum of condensing activity and to make this percentage of tubes presented to the incoming steam substantially constant and independent of the size of the condenser.

In attaining these specific objects, the condenser tubes are disposed in the form of a belt through which the steam passes from one side to the other, the flow resistance through this belt being uniform so that the steam will not pass through portions of the belt more freely than through other portions. The tubes in the belt may be uniform in number and spacing of tubes from the entrance side to the exit side, or the tubes may be spaced more closely on the exit side, it being necessary only that the flow resistance from the inlet to the outlet side should be the same throughout the length of the belt. Other means, however, may be employed for securing the uniform resistance to flow across the belt that is important for securing the result of uniform flow and maximum condensation from each of the tubes. This desired result of uniform flow and maximum condensation from each of the tubes may be secured by a thinner belt of tubes closely spaced or a thicker belt of tubes more widely spaced, and the belt need not be continuous throughout the condenser, but may be interrupted by a plate or plates and the uniform flow resistance through the active portion of the tube belt still be maintained. The belt will preferably be formed in folds or convolutions to provide large tube area within a certain condenser dimension with free admission of steam to a large percentage of the tube surface, and these folds or convolutions may be of any suitable shape and adapted to a shell of any desired form. The folds or convolutions will be so arranged as to provide equal access of steam to all the tubes of the outer row on the steam side of the belt and so as to provide equal freedom of escape of air from all the tubes on the outlet or air side of the belt. It is preferable that all steam flow areas should be proportioned to the number of tubes supplied by steam from any particular section of the steam flow passage, so that the steam velocity will be the same in entering the tube belt and likewise the air spaces between the tube folds will preferably be widest at the exit end of the air passage, which aids in securing a compact construction and reducing the total size of the condenser.

The general features of the invention above described may be used in condensers in which special provision is not made for heating the condensate or preventing contact of air with the condensate water, but it is usually important in high vacuum large condensers that the condensate should be delivered at a temperature as near the temperature of the exhaust steam as possible, and that air separated out by condensation of the steam should be taken off in such manner that the partial air pressure in the hot-well shall not be increased and the temperature of the condensate lowered by contact of such air.

A further object of my invention, therefore, is to provide for free access of exhaust steam to the hot-well and condensate water and to exclude air separated from the steam by condensation from contact with the condensate, and these results I secure in the preferred construction by arranging my belt of condenser tubes so as to leave a steam space for the free passage of exhaust steam to the

hot-well below the tube belt and by making ample provision for taking off the air from the entire outlet or air side of the tube belt.

For a full understanding of the invention, there are shown in the accompanying drawings forming a part of this specification forms of condensers embodying my invention in preferred forms, and these constructions will now be described in detail and the features forming the invention then be specifically pointed out in the claims.

In the drawings—

Figure 1 is a diagrammatic cross-sectional view showing a simple form of condenser embodying the broader features of the invention, without provision for the passage of steam to the condensate or special provision for excluding the air from the condensate and the hot-well;

Figures 2, 3 and 4 show modified forms of the same general character as shown in Fig. 1;

Figure 5 is a view similar to Fig. 1, showing an arrangement with both ends of the tube belt meeting the shell at one side of the hot-well, so as to pass steam to the condensate and with the air taken off from a space separated from the hot-well by the tube belt;

Figures 6, 7, 8 and 9 show modified forms of the same general character as shown in Fig. 5;

Figure 10 shows a construction with plates forming one side of the tube belt folds and acting as drain plates and air passage closures; and

Figures 11, 12 and 13 show constructions with a plurality of tube belts on opposite sides of a central steam space, each belt arrangement being of the same character as those shown in Figs. 5 to 9.

In the drawings, A is the condenser shell, B the steam inlet, C the hot-well, and *a* the air offtake connected to the usual air ejector or vacuum pump of any form. Tube belt D, as shown in Fig. 1, is a shallow, continuous bank of tubes, shown as of uniform depth, in which case the spacing of the tubes will be uniform throughout the length of the belt, so as to secure uniform flow resistance throughout the belt, and the ends of this belt join the casing near the exhaust inlet B, so as to compel all the steam to pass through the tube belt for condensation. The tube belt is formed in several folds or convolutions, the steam inlet spaces 10 being preferably of decreasing width within the folds, according to the extent of the tube belt to be supplied with steam by different sections of the inlet passage, thus securing a more compact construction and aiding in securing uniform flow through the belt, and the air passages 11 on the opposite side of the belt from the steam spaces, will preferably expand, increasing in size toward the outlet, for free flow of air with compactness of construction. It will be understood, however, that it is necessary only that the air spaces should be such as to secure the prompt and free flow of air from the outlet side of the tube belt.

It is not necessary that the number and spacing of the tubes should be uniform from inlet to outlet side of the belt, and in some cases it may be desirable to place the tubes nearer each other on the outlet side or to gradually decrease the tube spacing from the inlet to the outlet side, or otherwise provide for less free flow on the outlet side than on the inlet side of the belt. The decrease in tube spacing toward the outlet side allows for the steam condensed nearer the inlet side and the maximum condensation from each tube is thus secured with a larger tube surface in the same condenser dimensions or with a reduction in condenser size.

In Fig. 2 the arrangement is the same as in Fig. 1, except that the tube belt folds are substantially vertical instead of inclined, and two air offtakes *a* on opposite sides of the condenser are used, which avoid the passage of the air over the hot-well from the left side of the condenser to the offtake at the right hand, which is incident to the construction shown in Fig. 1.

In Fig. 3 a bowl-shaped condenser is shown, with the ends of the tube belt D meeting the casing on opposite sides of the hot-well. The air chamber with which the air passages 11 connect are thus central above the hot-well, the air offtake *a* being shown as in the upper part of the hot-well, although it is obvious that this air offtake might be located in any part of the central air chamber.

In Figure 4 a rectangular condenser casing is shown, with vertical tube belt folds and the ends of the tube belt joining the casing above the hot-well and air offtake *a*. In this construction, inclined guide plates in the tube belt are shown, these plates being arranged at intervals in the vertical tube belt folds and inclined toward the air passages 11, so as to act as drain plates for the condensate, by which the condensate is drained to the air passages 11 and thence downward to the bottom of the condenser and the hot-well.

Referring now to the constructions shown in Figs. 5–8, the ends of the tube belt in these figures join the casing on the same side of the hot-well, so as to form a free passage for the steam around one side of the tube belt to the top of the hot-well, and the tube belt is formed so as to enclose on its delivery side the air chamber and air offtake *a* so that the separated air is not in contact with the condensate in the hot-well. In Fig. 5 the tube belt is formed and folded approximately the same as in Fig. 1, except that the ends of the tube belt meet the casing on the same

side of the hot-well C instead of at opposite sides, as in Fig. 1, this construction of Fig. 5, therefore, leaving a free steam passage 12 from the exhaust inlet B around one side of the tube belt to the hot-well, and the ends of the tube belt meet the casing at opposite sides of the outlet *a* for the air, so that the tube belt encloses the latter and the separated air is shut off from the hot-well.

In Fig. 6 a rectangular condenser casing A is shown, with substantially the arrangement shown in Fig. 5, except that the folds or convolutions of the tube belt D are substantially vertical and the lower portion of the tube belt extends substantially horizontally across the condenser below the air offtake *a*.

In Fig. 7 a circular condenser casing A is shown, with the tube belt arranged substantially the same as in Fig. 5, except that an inclined plate 13 is used below the vertical belt folds to provide space below it for an air cooler 14 through which the air is drawn around the lower end of the plate 13 to the air offtake *a*, the plate 13 acting to prevent condensate being drawn into the air pump but draining the condensate to the hot-well.

In Fig. 8 a construction similar to Fig. 7 is shown, except that the tube belt folds are more nearly horizontal, and the air offtake *a* is enclosed by a V-shaped plate 15, with the air offtake *a* projecting into the air chamber and covered by a plate 15 so that the air is drawn from the condenser between the ends of the plate 15 and the casing and through the air cooler 14 to the inner end of the air outlet.

In Fig. 9 a construction similar to Fig. 6 is shown, except that the air off-take *a* is in the upper part of the casing A, and an inclined drain plate 16 provides for an air cooler 14 through which the air passes to the air offtake.

In some cases, the tube belt may not be continuous throughout, but may be interrupted by plates or other devices of such a character as to entirely close off the spaces between the sections of the tube belts, thus preventing any short-circuiting of steam through the condenser. In Fig. 10 I have shown such a construction, which is similar in form and arrangement of the tube belt to that shown in Fig. 1, except that one side of each tube belt fold is formed by a plate 17 which joins the ends of two successive folds of the tube belt and is spaced from the tube belt to leave the air passages 11 on the outlet side of the tube belt, from which passages the air passes to the air outlet *a*. These plates 17 also act as drain plates for condensate dropping from the tube belt folds above them.

In some cases, and especially in large condensers, it will be desirable to use more than one tube belt, and such constructions with two tube belts are shown in Figs. 11–13, in which two tube belts, similar to those previously described, are arranged on opposite sides of the vertical central line of the condenser, so as to leave a central passage 18 between them, through which exhaust steam may pass to the hot-well for heating the condensate. In these constructions, each of the tube belts encloses its own air chamber and air offtake, two air offtakes being used at opposite sides of the condenser.

It will be understood that the invention may be embodied in many other constructions differing in form and arrangement from those shown, and that the invention is not to be limited to the constructions illustrated, but includes all other constructions within the scope of the invention as defined by the claims.

What is claimed is:

1. In a steam condenser, a tube bank consisting of a shallow belt of tubes forming the steam condensing surface between the exhaust inlet and air outlet and of substantially uniform flow resistance throughout the length of the belt, said belt being arranged in folds providing steam spaces on the inlet sides of the folds and air spaces on the exit sides of the folds, said belt having its ends joining the casing on the same side of the hot-well and separated from the casing on the opposite side of the hot-well to leave a space for the passage of exhaust steam from the exhaust inlet to the hot-well between the tube casing and the tube bank.

2. In a steam condenser, a tube bank consisting of a shallow belt of tubes forming the steam condensing surface between the exhasut inlet and air outlet and of substantially uniform flow resistance throughout the length of the belt, said belt being arranged in folds providing steam spaces on the inlet side of the folds and air spaces on the exit sides of the folds, said belt being arranged to leave a space for the passage of steam outside the belt from the exhaust connection to the condensate discharge, an air chamber enclosed and separated from the condensate discharge by the tube belt, an air cooler in said chamber, and an air offtake from said air cooler.

3. In a steam condenser, a casing, a belt of tubes having its ends joining the casing in such manner as to leave a space for the passage of exhaust steam from the exhaust inlet to the hot well.

4. In a steam condenser, a casing, a belt of tubes having its end joining the casing in such manner as to leave a space for the passage of exhaust steam from the exhaust inlet to the hot well, and an air outlet separated by said tube belt from the hot well and exhaust inlet.

5. In a steam condenser, a tube bank consisting of a shallow belt of tubes extending between the exhaust inlet and air outlet, said belt of tubes being arranged in folds with the major length of each fold extending transversely to the direction of entrance of exhaust steam into the condenser.

6. In a steam condenser, a tube bank consisting of a shallow belt of tubes extending between the exhaust inlet and air outlet, said belt of tubes being arranged in folds providing contracting steam space on the inlet sides of the folds and expanding air space on the exit sides of the folds, the major length of each fold of said tube belt extending transversely to the direction of entrance of exhaust steam into the condenser.

7. In a steam condenser, a tube bank consisting of a shallow belt of tubes extending between the exhaust inlet and air outlet, said belt of tubes being arranged in folds providing contracting steam space on the inlet sides of the belts and expanding air space on the exit sides of the folds, the major length of each fold of said tube belt extending transversely to the direction of entrance of exhaust steam into the condenser, an air chamber enclosed and separated from the condensate discharge by the belt, and an air offtake from said air chamber.

In testimony whereof, I have hereunto set my hand.

CHARLES E. LUCKE.