Aug. 17, 1943. E. G. BUNJES 2,327,246

WINDOW

Filed Jan. 16, 1940 3 Sheets-Sheet 1

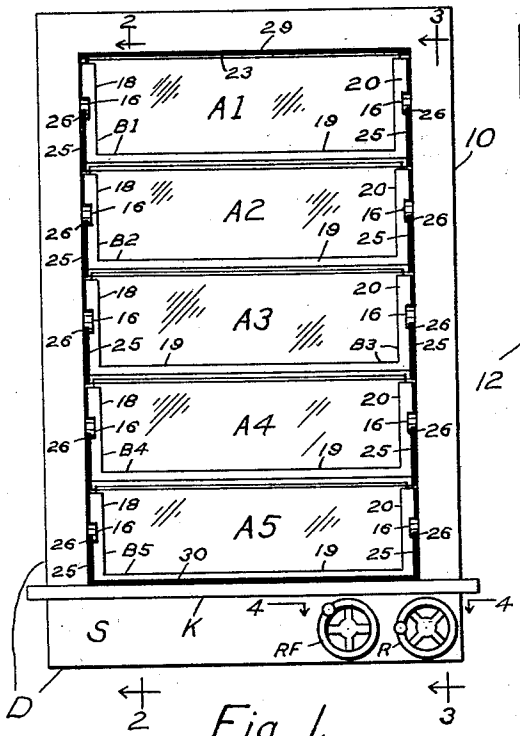

Fig. 1.

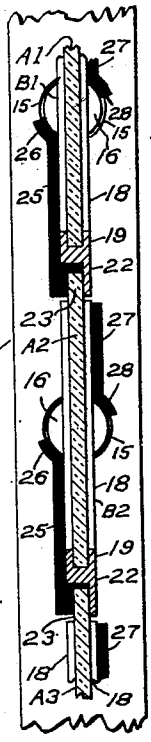

Fig. 2

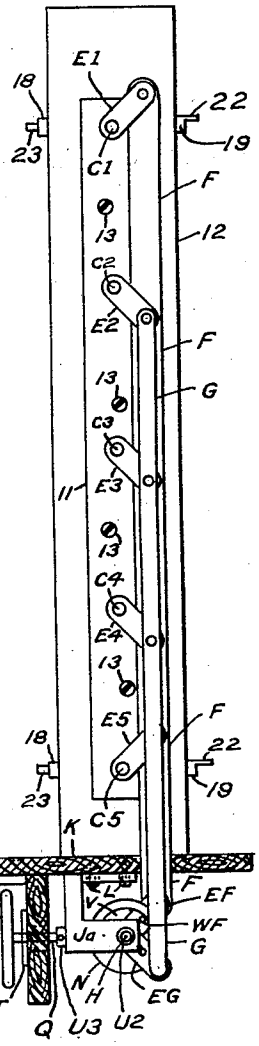

Fig. 3

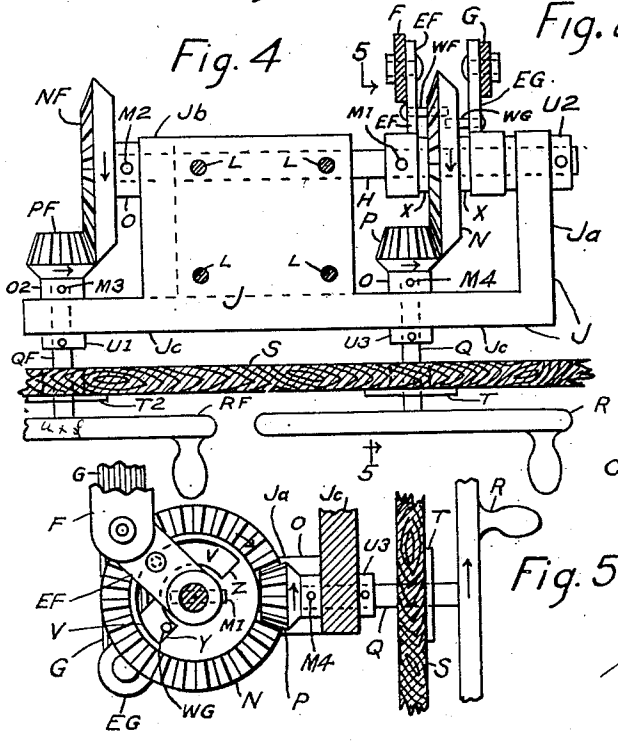

Fig. 4

Fig. 5

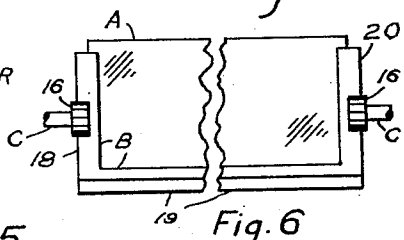

Fig. 6

INVENTOR:

Edwin G. Bunjes

Aug. 17, 1943. E. G. BUNJES 2,327,246

WINDOW

Filed Jan. 16, 1940 3 Sheets-Sheet 2

Fig. 7

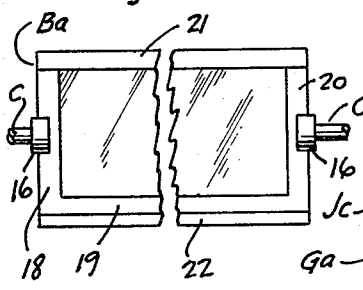

Fig. 8

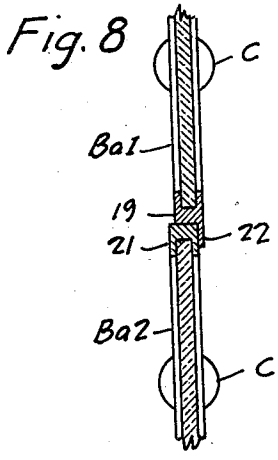

Fig. 11

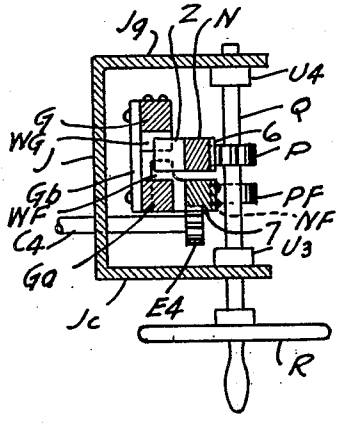

Fig. 9

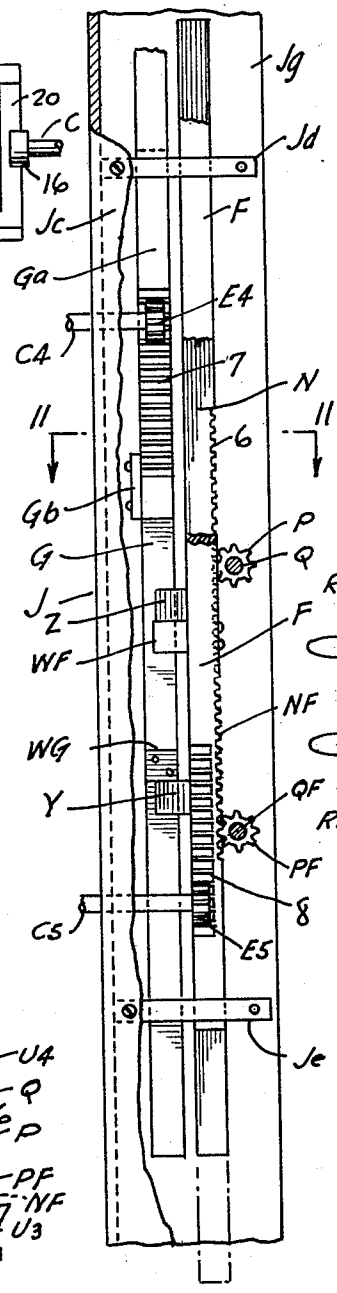

Fig. 10

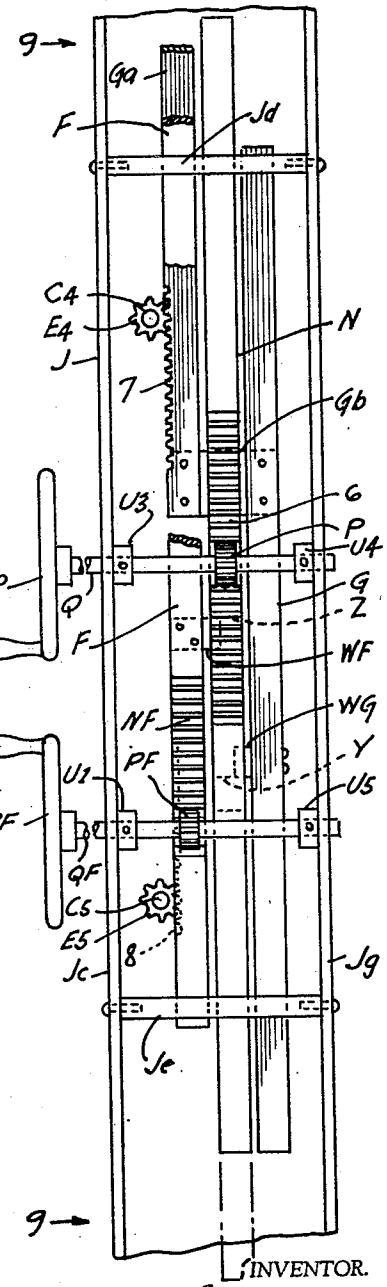

INVENTOR.

Edwin G. Bunjes

Aug. 17, 1943. E. G. BUNJES 2,327,246

WINDOW

Filed Jan. 16, 1940 3 Sheets-Sheet 3

Fig. 15

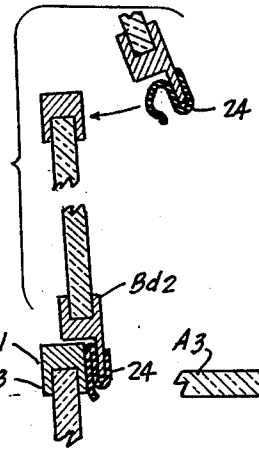

Fig. 12

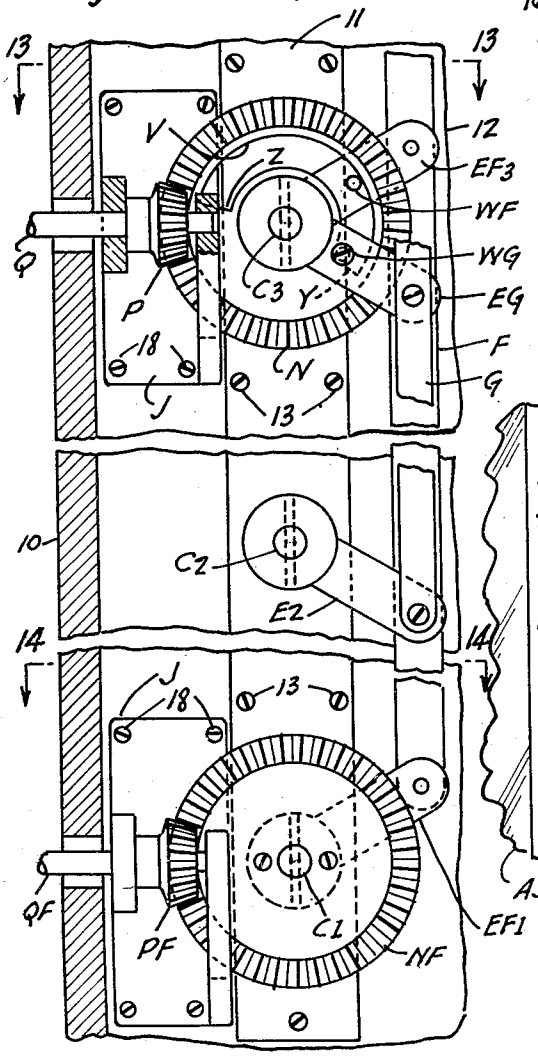

Fig. 13

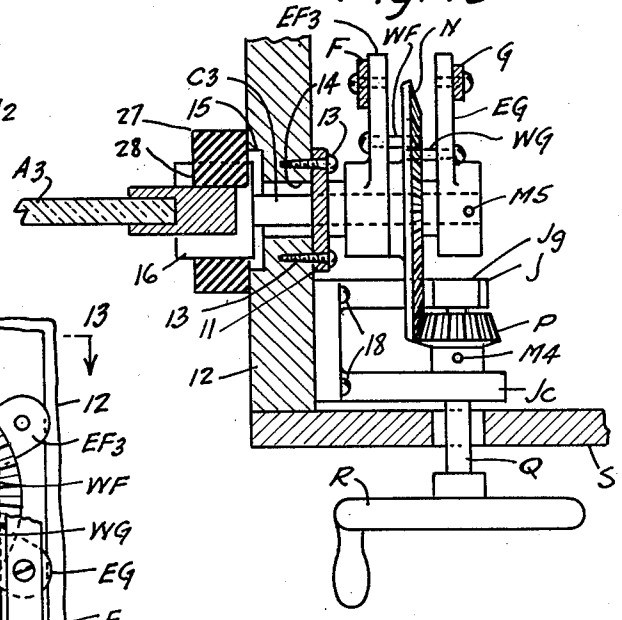

Fig. 14

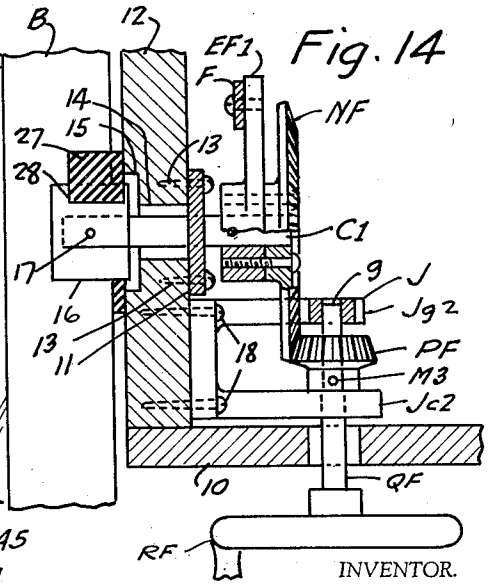

INVENTOR.

Edwin G. Bunjes

Patented Aug. 17, 1943 2,327,246

UNITED STATES PATENT OFFICE

2,327,246

WINDOW

Edwin G. Bunjes, Los Angeles, Calif.

Application January 16, 1940, Serial No. 314,063

7 Claims. (Cl. 268—21)

This invention relates to windows, and more particularly to windows comprising a plurality of panes.

Ordinary windows that are opened by raising the bottom half or lowering the top half, are incapable of being opened more than half way; and the French type interfere with curtains and drapes if they open toward the inside, or with the screens if they open outwardly. One of the objects of the present invention is to overcome these difficulties.

Heretofore, French windows have been the only type that could easily be cleaned on both sides by a person remaining entirely on the inside of the room, an advantage that has been offset by the above mentioned complications involving curtains, drapes and screens. An additional object of the present invention is to provide a window that may be as easily cleaned as the French type without any of the disadvantages associated therewith.

Other objects of the invention herein described, are the attainment of a decorative effect simulating that of Venetian blinds; the exclusion of rain and outside air; the provision of means for opening certain of the panes for ventilation or other purposes while leaving the remainder of the panes in closed position, and of means for opening and closing all of the panes by a single control. Still other objects will appear as the specification proceeds.

In the drawings:

Fig. 1 is a front elevation of one form of my new window as it appears from the inside of the room.

Fig. 2 is an enlarged fragmentary vertical section on line 2—2 of Fig. 1.

Fig. 3 is a vertical section approximately on line 3—3 of Fig. 1.

Fig. 4 is a fragmentary sectional plan view on line 4—4 of Fig. 1.

Fig. 5 is a fragmentary vertical sectional view on line 5—5 of Fig 4.

Fig. 6 is a fragmentary elevation of a single frame and pane of the type illustrated in Fig. 2.

Fig. 7 illustrates a modified frame suitable for each pane of the window.

Fig. 8 is a vertical sectional view of two panes of the type shown in Fig. 7, illustrating the means of articulation of adjoining panes.

Fig. 9 is a fragmentary sectional elevation of a modified form of my invention, showing the operating mechanism.

Fig. 10 is a fragmentary vertical section of the modification shown in Fig. 9, with certain parts and portions supplied that are missing in Fig. 9.

Fig. 11 is a section taken on line 11—11 of Fig. 10, with one of the operating handles added.

Fig. 12 is a side view corresponding to Figs. 3 and 10, and shows another modification of the operating mechanism.

Fig. 13 is a fragmentary sectional view taken substantially on line 13—13 of Fig. 12, but oriented 90 degrees counter-clockwise to show the operating handle as it would face the operator.

Fig. 14 is a fragmentary sectional view taken substantially on line 14—14 of Fig. 12, also oriented 90 degrees counter-clockwise.

Fig. 15 illustrates the articulation of a modified form of holder in which the lower rim is equipped with a special resilient strip for producing a closer fit with the next lower pane.

In the various figures, the same or similar reference letters and/or numerals refer to the same part, a part with the same function, or an identical part of a type of which there is a plurality.

In each of the three species of my invention covered by this specification, the window comprises a series of panes A1, A2, A3, A4, and A5, substantially as shown in Fig. 1, the exact number of panes being a matter of choice or design. Each of these panes is supported by a holder B, or B followed by other indicia, as indicated in Figs. 1, 2, 6, 7, 8 and 14. By means of shafts C that are integral with the holders, these panes are pivoted in the frame D, in a manner to be more fully described.

When ventilation only is required, it may frequently not be desirable to open all the panes, and for this reason provisions have been made whereby the upper and lower panes may be opened independently of the rest; and another control is provided for opening these intermediate panes when the upper and lower ones are already open, or for opening or closing the entire group. One form of this operating mechanism comprises a series of arms E1 to E5, Fig. 3, connected respectively to shafts C1 to C5. The upper and lower arms E1 and E5 are connected at the outer ends to rod F, and the intermediate arms E2, E3 and E4 are connected in like manner to rod G. The lower ends of rods F and G are connected respectively to operatings arms EF and EG, which are supported on shaft H, journaled in plates *Ja* and *Jb* of bracket J, attached to the under side of sill K by screws L. As indicated in Fig. 4, arm EG is freely rotatable on shaft H, while arm EF is attached to the shaft by pin M1. A bevel gear

NF is attached to shaft H by means of pin M2, and the hub O of this gear abuts against piece *Jb* of the bracket. Bevel gear PF meshes with gear NF, and is attached by means of pin M3 in its hub O2 to shaft QF, carrying crank wheel RF on its outer end. Shaft QF is journaled in piece Jc of bracket J, and is additionally supported by escutcheon T2, fastened to the under-sill S, through which said shaft passes. Longitudinal movement of shaft QF is prevented by hub O2 and collar U1.

Through the instrumentality of the mechanism just described, it will be obvious that the upper and lower panes may be opened and closed by the operation of crank wheel RF. The rotation of this crank to the right causes gear PF to turn in the direction indicated by the arrow thereon, causing gear NF, Fig. 4, to turn toward the operator, thus raising the operating arm EF and, through link F, arms E1 and E5, which rotate shafts C1 and C5 in the direction required to open panes A1 and A5. These sections of the window may, of course, be closed by turning crank RF to the left.

Gear N, which freely rotates on shaft H, functions to open panes A2, A3 and A4 if the upper and lower panes are already open, or to open and close them all. This gear is provided with an arcuate opening V, Figs. 3 and 5, extending from about 90° to 180° around the center. Pins WF and WG, attached respectively to operating arms EF and EG, both protrude into slot V, but they are positioned on these arms at different radial distances from the centers so that they may pass in slot V, which is wide enough to accommodate them both. As shown in Fig. 4, arms EF and EG are located on opposite sides of gear N, with washers X intervening. Gear N meshes with gear P, attached to shaft Q by means of pin M4 in hub O. The other end of shaft Q carries crank wheel R. This shaft is journaled in front piece Jc of bracket J, and is given additional support by escutcheon T, attached to under-sill S. Longitudinal movement of this shaft is prevented by its hub O and collar U3. Operating arm EG rotates arms C2, C3 and C4, through the linkage system previously explained.

Assuming that gear N is in the position shown in Fig. 5, it will be obvious that arm EF, in opening the upper and lower panes, could have been turned to the position indicated by means of the mechanism previously explained without imparting any motion to gear N, as pin WF, on arm EF, had free space in slot V in which to move. If crank R is now turned to the right, as indicated by the arrow, the associated gears will also turn in the directions indicated by the respective arrows. This movement of gear N will cause the lower edge Y of slot V to engage pin WG, thus raising arm EG and opening panes A2, A3 and A4, through the respectively associated arms C2, C3 and C4 and the interconnecting link G.

If it is now desired to close all the windows, crank R is turned in the opposite direction. As the upper edge Z of slot V will now be a considerable distance beyond pins WF and WG, crank R with the connected gears P and N must turn a considerable distance before the lost motion is taken up and pins WF and WG engaged. Edge Z will then press on these pins and move both arms EF and EG to their downward positions, closing all the panes. At the end of this operation, pin WG will be in the position shown in Fig. 5, but pin WF will have been turned to a position beside pin WG, and edge Z of slot V will be in engagement with both pins.

Should it now be desired to open the ventilating panes, the rotation of crank RF will cause the connected parts to move arm EF upward. Inasmuch as pin WF will be in contact with upper edge Z of slot V, this upward movement of arm EF will cause gear N to turn, but no motion will be imparted to arm EG because the lower edge Y of the arcuate slot will be a considerable distance behind pin WG and will therefore not engage it.

If the mechanism was last used to close all the windows, and it is next desired to open them all, edge Z of the slot will be found in contact with pins or lugs WF and WG, and crank R must therefore be turned until edge Y moves around to the position of pins EF and WG before the operating arms EF and EG will start to move and to open the panes.

If the upper and lower panes are open and the remainder closed, the operating arms will be in the positions shown in Fig. 5, and the position of gear N will be as indicated or somewhere between this position and one in which edge Z would be in contact with pin WF. In any of these possible positions of gear N, it is obvious that the closing of the ventilating panes and the necessary downward movement of operating arm EF and the attached pin WF, will not cause any movement of gear N, as pin WF will have free space within the slot in which to move.

The species of operating mechanism shown in Figs. 9 and 10 may at first appear radically different from the species hereinbefore explained, but the following explanation will disclose that it embodies the same invention, as broadly defined in the appended claims.

Crank RF, Fig. 10, for operating the ventilating vanes, is attached to shaft QF journaled in sides *Jc* and *Jg* of the channel shaped member J, and constrained against longitudinal movement by collars U1 and U5. This shaft bears pinion PF, meshing with rack NF, an integral part of rod F, mounted for longitudinal movement in horizontal pieces *Jd* and *Je*, supported in member J. Rod F bears another rack portion 8, meshing with pinion E5 carried on shaft C5, which operates the lower pane in the manner previously described and therefore not repeated here. The upper portion of rod F has another rack section like rack portion 8, for operating the upper pane through another pinion and shaft, but as these parts are duplicates of those just referred to, they are not shown in the drawings.

Crank R is attached to shaft Q, carrying pinion P, and prevented from moving longitudinally by collars U3 and U4. Pinion P meshes with rack portion 6 on rod N, which serves the same purpose as gear N in the species previously explained. Two spaced lugs, Y and Z, are mounted on one side of rod N. Tappets WF and WG are mounted respectively on rods F and G in such a manner that they enter the paths of lugs Y and Z so as to be engaged thereby upon longitudinal movement of rod N, which is slidably supported in pieces *Jd* and *Je*. Tappets WF and WG are adapted to pass each other without interference, as will be apparent from Fig. 10. Rod G is attached to rod *Ga* by an intermediate member *Gb*, jointed by bolts, screws or other appropriate means so that rods *Ga* and G move rectilinearly as a unit in the supports *Jd* and *Je*. Rod *Ga* has a rack portion 7, meshing with pinion E4 on shaft C4, and other identical rack portions, not

shown in the drawings, are provided for other pinions that are similarly connected to the shafts that operate the other intermediate panes.

If the rods are in the position illustrated in the drawings, the upper and lower panes will be open and the intermediate panes closed. If crank R is now turned so that shaft Q rotates in the direction indicated by the arrow around it, rod N will be moved upward through the action of pinion P on rack section 6, and lug Y, shown in engagement with tappet WG, will raise this tappet and thus move rods G and G*a* upward, opening the center group of panes through the instrumentalities of the various associated parts already described.

After the operation just mentioned, all the windows will be open and lug Y will be in contact with both tappets WF and WG. If it is now desired to close all the panes, crank R is turned in the opposite direction, but no movement will be imparted to rods F and the integral G—G*a* assembly until the lost motion is taken up between lug Z and the tappets. After they have been engaged, however, the further downward movement of rod N will cause the tappets to push their associated rods downward, thus closing the panes.

If the ventilating panes are open and the remainder closed, the operating rods will, of course, be in the position shown in the drawings. It will be obvious that the downward motion of rod F to close the ventilators will not cause any movement of rod N, because tappet WF will move through the open space between lugs Z and Y.

If the last operation of the mechanism was to close all the windows, tappet WG will be in the position shown in the drawings, but tappet WF will be beside it, with lug Z in engagement with them both. Should it now be desired to open all the panes, the rotation of crank R will cause rod N to move up until lug Y contacts tappets WF and WG without imparting any motion to the rest of the mechanism, but after the tappets have been engaged, the further upward movement of rod N will raise both tappets and the rods to which they are attached, thus opening all the windows through the operation of the various previously described interconnected parts.

The preferred form of my operating mechanism is that shown in Figs. 12, 13 and 14. In this embodiment, which resembles the species first described, bevel gear NF and operating arm EF1, attached so that both turn as an integral unit, are mounted on shaft C1 of lower pane A5. Bevel gear PF, Figs. 12 and 14, meshes with gear NF, and is attached to shaft QF journaled in pieces J*c*2 and J*g*2 of bracket J, the latter piece being adapted to receive the reduced end 9 of shaft QF, which passes through the trim, or window mold, piece 10 of frame D to carry crank wheel RF on its outer end.

Bevel gear N, Figs. 12 and 13, is free to rotate on shaft C3 of the middle pane holder, but it will be understood that shafts C2 or C4 would suffice as well. Operating arm EF3 is also free to rotate on this shaft. Rod F is attached to operating arms EF and EF3, as well as to arm EF1, this last arm EF and connection not being shown in Fig. 11 because this part of the construction is identical to that pictured in Fig. 3. Operating arm EG is attached to shaft C3 by pin M5. Gear N has an arcuate slot V like that in the corresponding gear in Figs. 3, 4 and 5, and into this slot protrude the tappet pins WF and WG attached respectively to operating arms EF3 and EG. Link or rod G is attached to operating arm EG, which operates the intermediate panes in identically the same way as does rod G in the embodiment first described. The only difference in the operation of this third species of my operating mechanism and that of the first species, lies in the fact that the independent operation of the ventilating panes is controlled from a different shaft than that which moves them in conjunction with the other, or intermediate, panes.

If the bracket J of Figs. 9 and 10 is of metal, the shafts *c* of the pane holders may be journaled directly in the bracket on the right side of the window. On the left side, independent bearings may be provided, or a strip of metal similar to 11 in Fig. 12 may be used to furnish bearings for all the shafts. In the first and third species, this last bearing means is preferred, because the bearing holes may be drilled in two such strips simultaneously from a template, and these may be mounted on the outer surfaces of the stiles of the window frame, as indicated in Figs. 12, 13 and 14, in which bearing strip 11 is shown attached by means of screws 13 to stile 12. The stiles are drilled to provide holes 14, Figs. 13 and 14, for each of the pane holder shafts, and each hole has a counter-sunk or enlarged portion 15 to receive the hub 16 of the associated pane holder, into which hub the shaft is rigidly attached by pin 17 or other appropriate means.

The brackets J, Figs. 12, 13 and 14, are attached to the stile by screws 18.

Each side of the pane holders B is U-shaped or channeled, as indicated in Figs. 2, 8, 13 and 15, and in the form shown in Figs. 2 and 6, it consists of three integral sides 18, 19 and 20 into which the plate of glass may be slipped and cemented. When the holders are four-sided, as in Figs. 7 and 8, it is necessary that the fourth side 21 be made in a separate piece so that the glass may be slipped into the three-sided portion 18, 19 and 20 and then the fourth side 21 slipped over the remaining edge of the pane. This fourth side can be cemented to the glass, and then, if desired, it may be soldered, welded or otherwise attached to sides 18 and 20. It is, of course, immaterial which three sides are made in one piece, and which becomes the fourth side.

When the holders are three-sided, they articulate as shown in Fig. 2, the upper unprotected edge 23 of each plate of glass fitting against portion 22 of the lower edge of side 19 of the adjoining pane-holder above. This construction prevents wind or rain from passing the joint.

When the holders are four-sided, the upper side 21 of the frame fits against the abutment 22 on side 19 of the holder next above.

If it is desired to provide a tighter fitting joint between adjacent pane holders, this may be accomplished by attaching a piece of spring metal to portion 22 of the lower side of the holder. This spring metal strip should have a cross section similar to that shown in Fig. 15, in which pane A1 is shown partly opened, with strip 24 out of contact with edge 21 of the next lower pane holder. When the pane is closed, the spring strip presses tightly against edge 21 of the holder below, causing it to take substantially the shape indicated on holder B*d*2.

It is necessary that stops or a beading be provided to limt the angular movement of the pane holders and to close the space that would otherwise exist between their outer edges and the ad-

joining stiles. The stops may be made of wood, rubber, or other material, such as a plastic. Molded rubber is perhaps the best. A stop **25**, Fig. 2, is provided for the lower part of each pane holder, and another stop **27** for the upper part. These stops **25** and **27** have formed portions **26** and **28** respectively to fit around the hub **16**. Beading or stops of the type just described is used on both the right and left stiles of the window, with a pair of stops for each end of each pane holder. A strip of beading or moulding **29** is attached to the upper portion of the window frame for the edge **23** of pane **A1** to fit against in the closed position, and another similar strip **30** is provided at the bottom to close the space that would otherwise exist between sill K and the lower side **19** of pane holder **B5**.

Various modifications and substitutions may be made in the embodiments of my invention as described and claimed herein without departing from its general spirit and scope.

My claims are:

1. In a closure device having a plurality of movable sections, a combination including: a first means for moving certain of said sections independently of the others; said means comprising an angularly movable member carrying a tappet; and a second means for moving all of said sections simultaneously from certain positions, said second means comprising a second angularly movable member carrying a tappet; said members having coincident rotational axes; said second means also comprising a component having a recess therein; one edge of said recess adapted to engage said tappets for moving their associated members in one direction, and the opposite edge of said recess adapted to engage said tappets for moving their associated members in the opposite direction.

2. In a closure device having a plurality of movable sections, a combination including: a first means for moving certain of said sections independently of the others; an angularly movable member carrying a tappet and having an operating connection with said first means; and a second means for moving all of said sections simultaneously from certain positions, said second means comprising an angularly movable member carrying a tappet; said second means also comprising an angularly movable component having an arcuate recess therein; one edge of said recess adapted to engage said tappets for moving at least certain of said sections in one direction, and another edge of said recess adapted to engage said tappets for moving at least certain of said sections in an opposite direction.

3. In a closure device having a plurality of angularly movable parallel sections, a combination including: a supporting frame for said sections; a housing attached to said frame; a shaft disposed in said housing parallel to said sections; a first means for moving certain of said sections independently of the others, said means comprising an arm attached to said shaft and carrying a tappet; and a second means for moving all of said sections simultaneously from certain positions, said second means comprising a second arm free to rotate on said shaft and carrying a tappet; said second means also comprising a member having a recess therein; one edge of said recess adapted to engage said tappets for moving their associated arms in one direction, and the opposite edge of said recess adapted to engage said tappets for moving their associated arms in the opposite direction.

4. In a closure device having a plurality of closure elements, a first motion-transmitting means for opening and closing certain of said elements; a second motion-transmitting means for opening and closing certain other of said elements; a first manually operable driving means having a positive operating connection to said first motion-transmitting means; and a second independent manually operable driving means having a lost-motion operating connection with both of said motion-transmitting means.

5. In a closure device having a plurality of closure elements, a first motion-transmitting means for opening and closing certain of said elements; a second motion-transmitting means for opening and closing certain other of said elements; a first driving means having a positive operating connection to said first motion-transmitting means and comprising a first manually operable member; and a second independent driving means having a lost-motion operating connection with both of said motion-transmitting means for actuating both of said motion-transmitting means, said second driving means comprising a second manually operable member.

6. In a closure device having a plurality of closure elements, a first motion-transmitting means for opening and closing certain of said elements; a second motion-transmitting means for opening and closing certain other of said elements; a first driving means having a positive operating connection to said first motion-transmitting means and comprising a first manually operable member; and a second independent driving means having a lost-motion operating connection with both of said motion-transmitting means and comprising a second manually operable member, said second driving means constructed and arranged to effect the opening of all closed elements upon operation of said second member in one operative direction by engaging and moving the motion-transmitting means associated with said closed elements, and to effect the closing of all open elements upon operation of said second member in the opposite operative direction by engaging and moving the motion-transmitting means associated with said open elements.

7. In a closure device having a plurality of closure elements, a first motion-transmitting means for opening and closing certain of said elements and comprising a first rectilinearly movable structure; a second motion-transmitting means for opening and closing certain other of said elements and comprising a second rectilinearly movable structure; a first manually operable driving means having a positive operating connection to said first motion-transmitting means; and a second manually operable driving means comprising a third rectilinearly movable structure having a first portion adapted to engage a portion of each of said first and second structures for moving the same to effect the opening of all closed elements; said third structure also having a second portion for engaging a portion of each of said first and second structures for moving the same to effect the closing of all open elements.

EDWIN G. BUNJES.