# United States Patent [19]

**Cone**

[11] **Des. 257,299**

[45] ** **Oct. 14, 1980**


[54] **PLAYPEN**


[75] Inventor: **Richard E. Cone**, Dayton, Ohio

[73] Assignee: **Questor Corporation**, Toledo, Ohio



[**] Term: **14 Years**

[21] Appl. No.: **944,208**

[22] Filed: **Sep. 20, 1978**

[51] **Int. Cl.** ..... **D6—06**
[52] **U.S. Cl.** ..... **D6/13**
[58] **Field of Search** ..... D6/13; 5/98 R, 93 R, 5/98 A, 99 A, 99 C



[56] **References Cited**

U.S. PATENT DOCUMENTS

| | | | |
|---|---|---|---|
| D. 244,890 | 7/1977 | Adams | D6/13 |
| 2,710,976 | 6/1955 | Martensen | D6/13 X |
| 3,309,718 | 3/1967 | Sarasin | D6/13 X |
| 3,430,273 | 3/1969 | Stillwaugh | 5/98 |



*Primary Examiner*—Bruce W. Dunkins
*Attorney, Agent, or Firm*—Donald R. Bahr


[57] **CLAIM**

The ornamental design for a playpen, as shown and described.

**DESCRIPTION**

FIG. 1 is a perspective view of a playpen showing my new design;
FIG. 2 is a top plan view thereof;
FIG. 3 is a side view thereof; and
FIG. 4 is a bottom view thereof.
Only one side of the playpen is shown in the subject drawings. All four sides of the playpen of the subject invention are essentially identical.

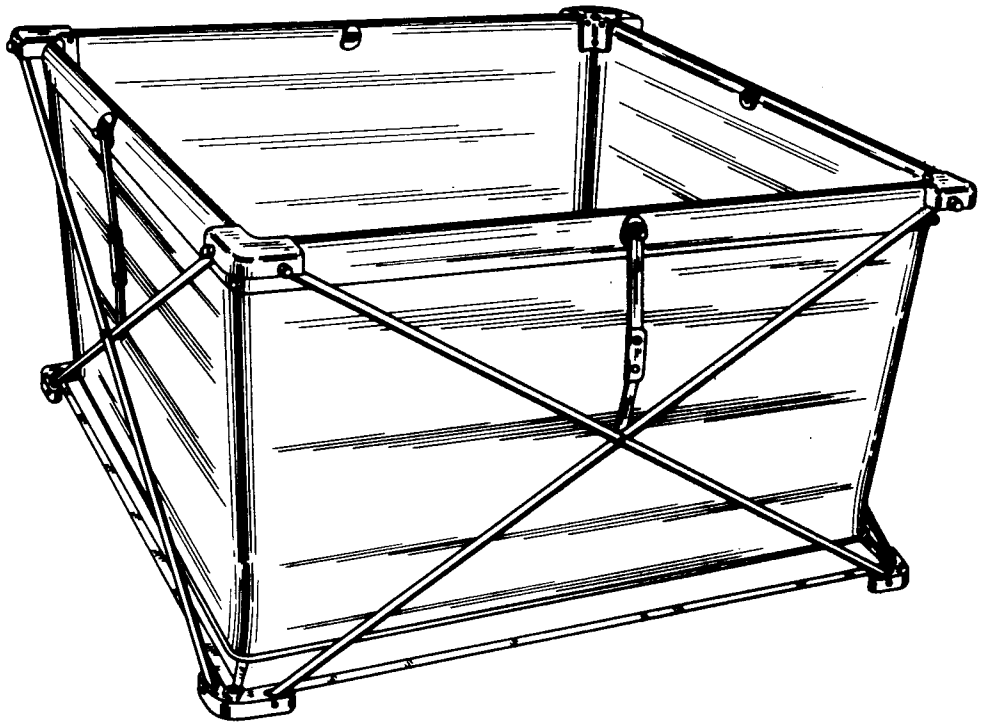

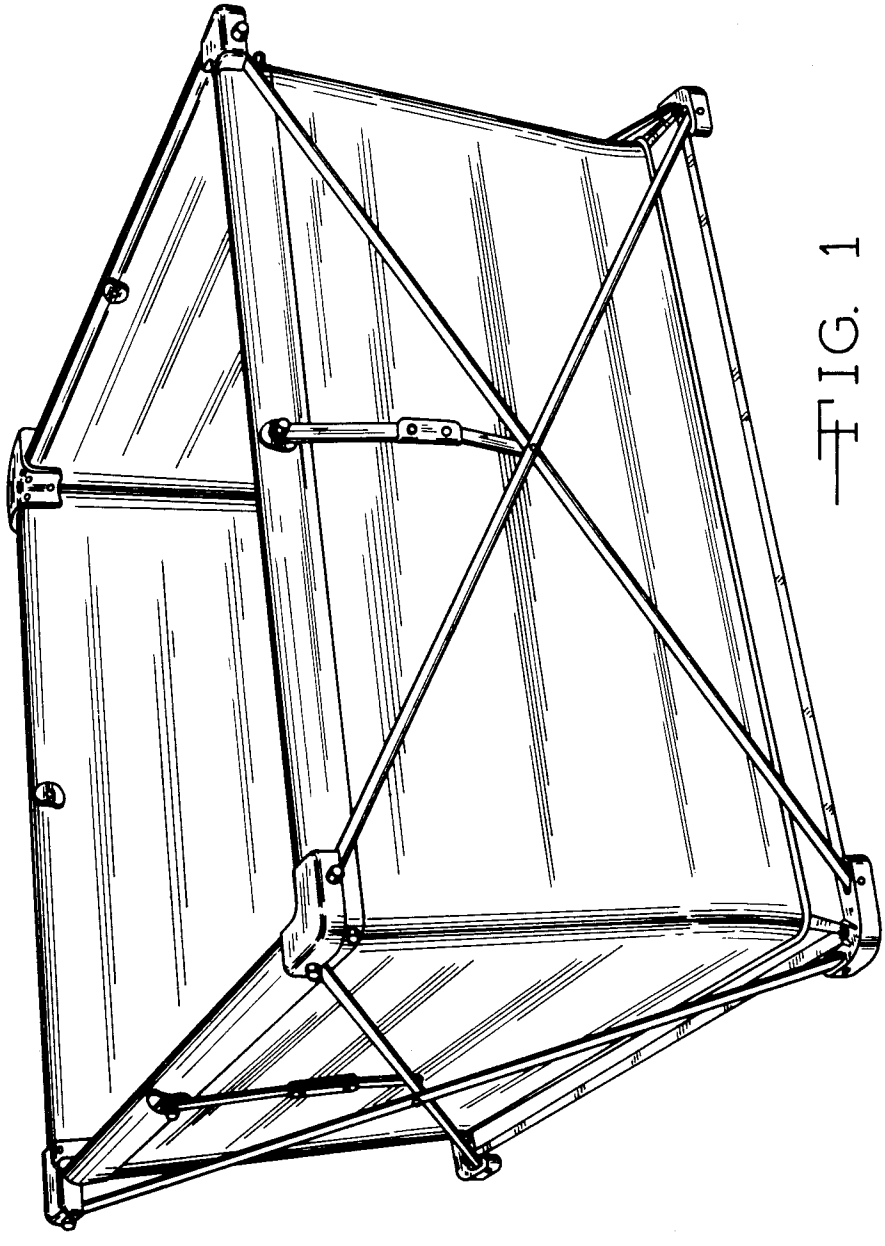

FIG. 1

FIG. 2

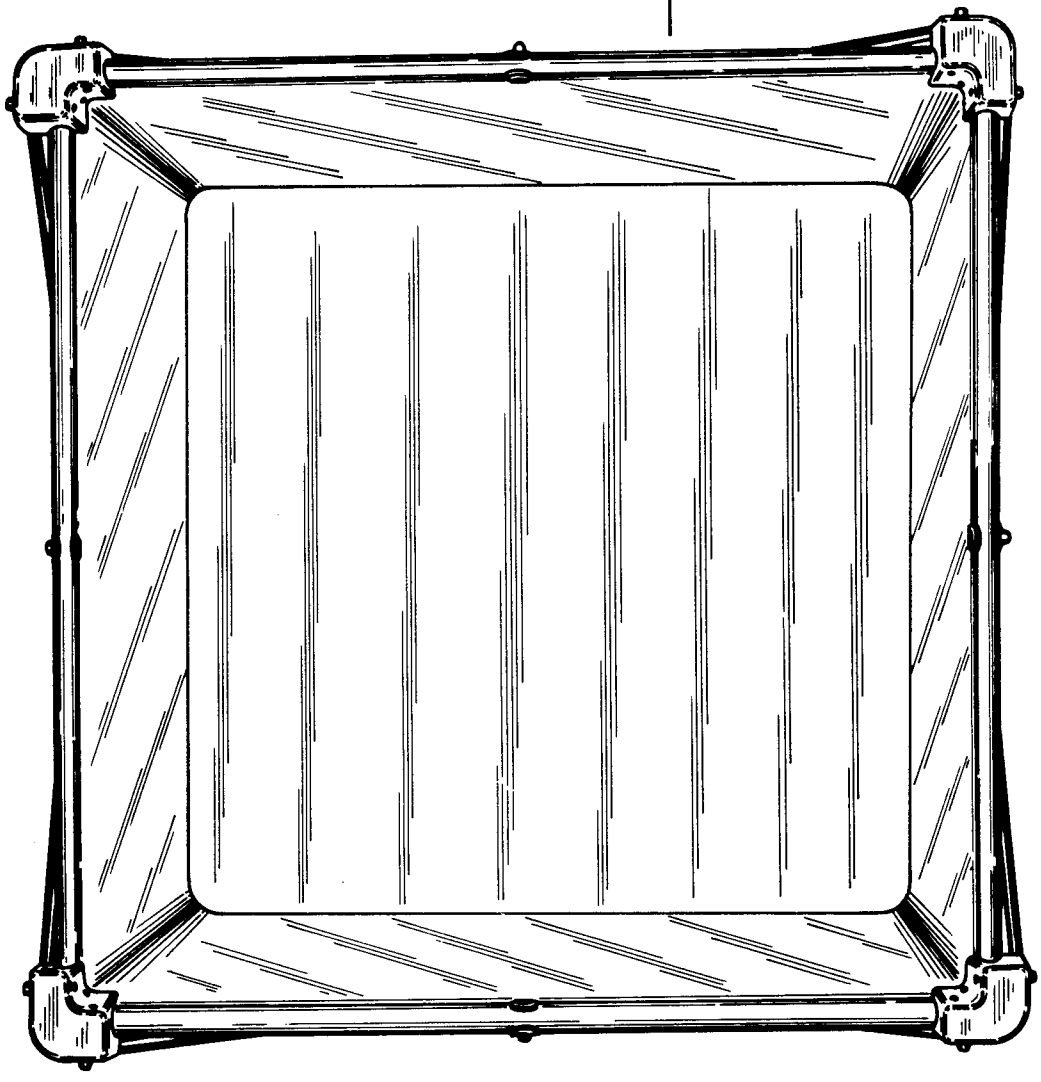

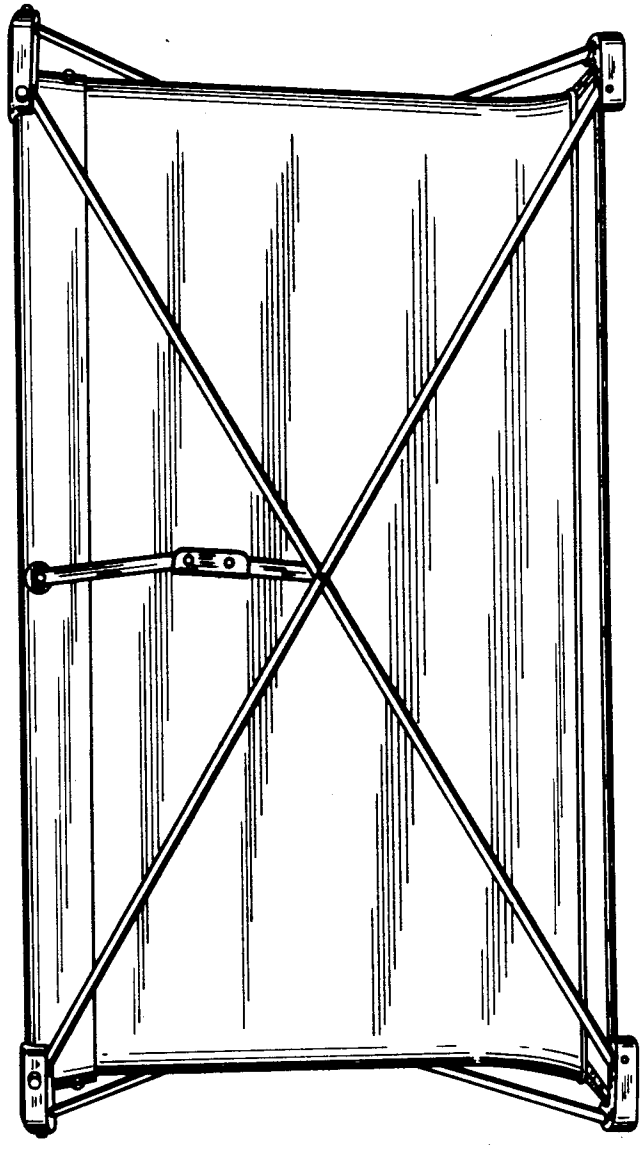

FIG. 3

FIG. 4

