Oct. 28, 1969 R. C. ROBINSON ET AL 3,474,617

SELECTABLE INTERVAL TIMER FOR CLOCKS

Filed June 6, 1967 2 Sheets-Sheet 1

FIG. 1

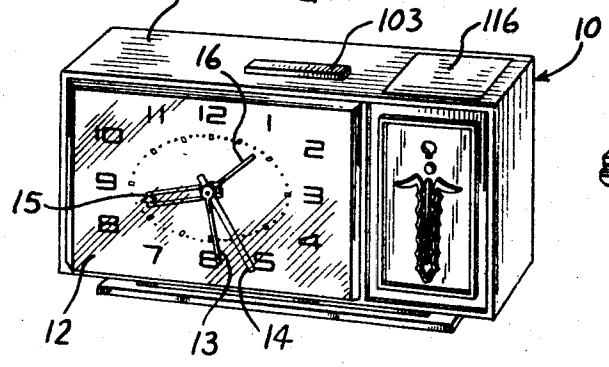

FIG. 2

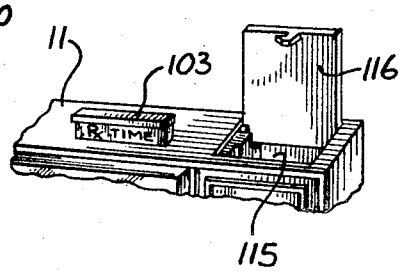

FIG. 3

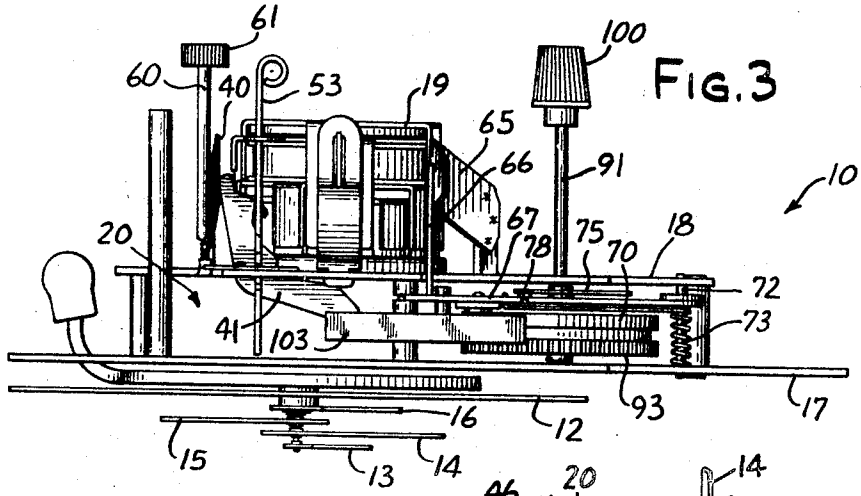

FIG. 4

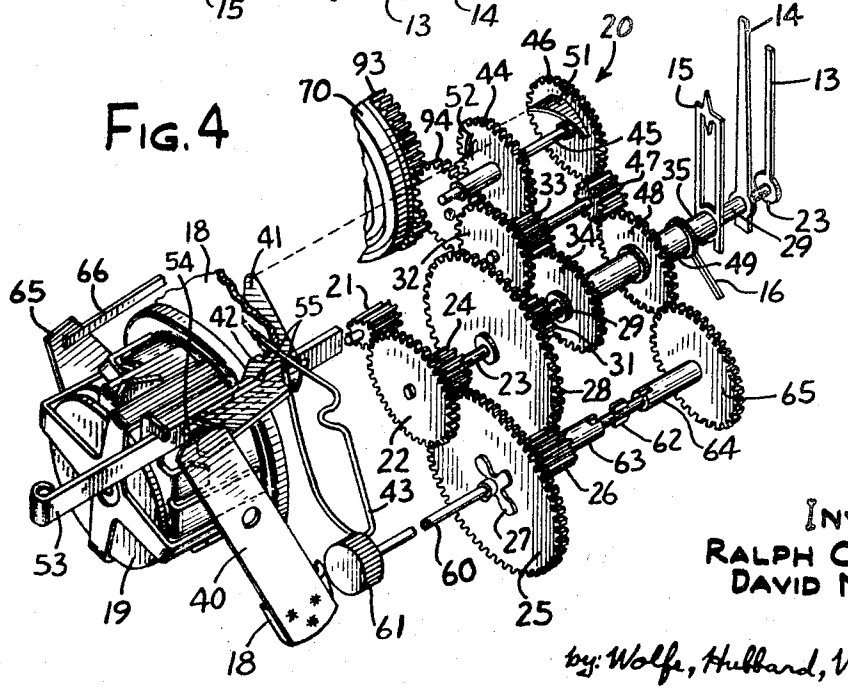

INVENTORS
RALPH C. ROBINSON
DAVID MORRISON

by: Wolfe, Hubbard, Voit & Osann
ATTYS.

Oct. 28, 1969 R. C. ROBINSON ET AL 3,474,617

SELECTABLE INTERVAL TIMER FOR CLOCKS

Filed June 6, 1967 2 Sheets-Sheet 2

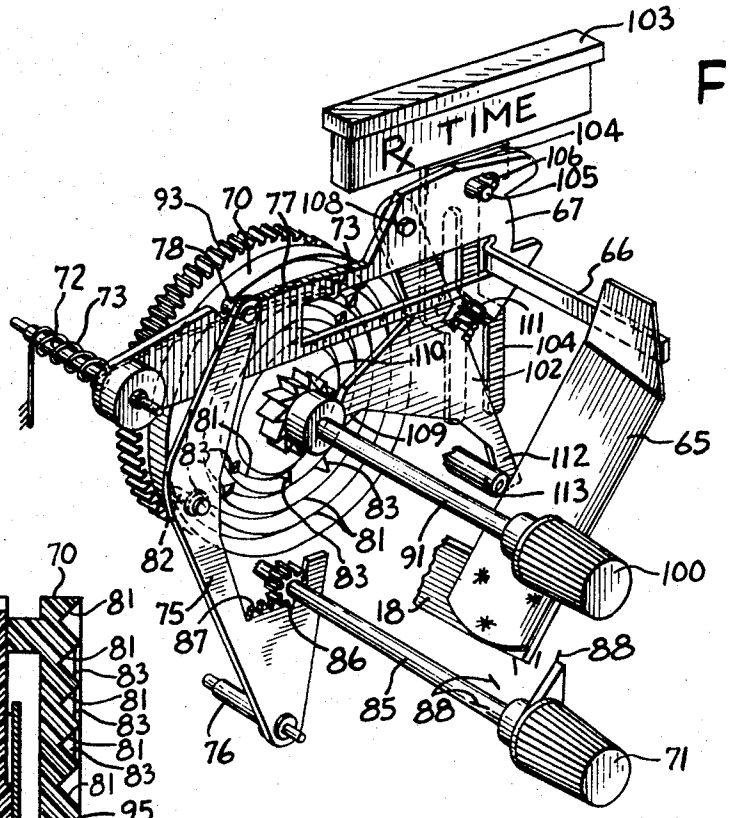

FIG. 5

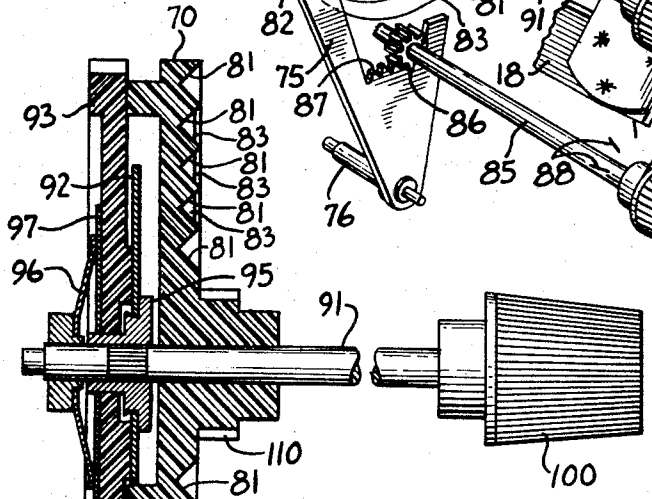

FIG. 6

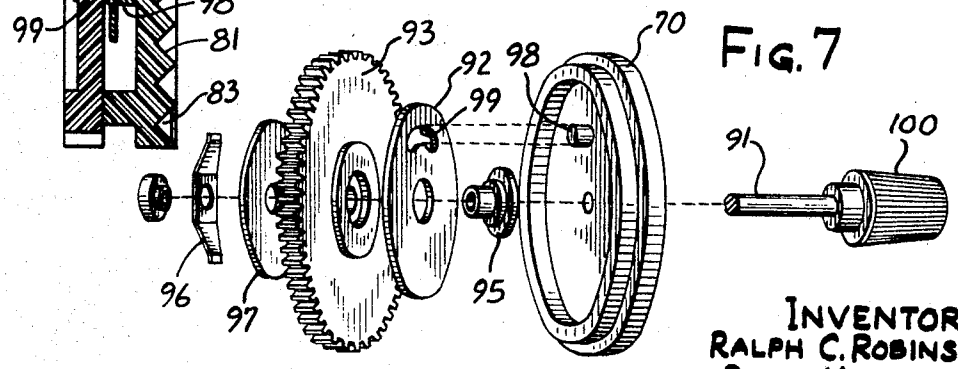

FIG. 7

INVENTORS
RALPH C. ROBINSON
DAVID MORRISON

by: Wolfe, Hubbard, Voit & Osann
ATTYS.

United States Patent Office 3,474,617 Patented Oct. 28, 1969

3,474,617

SELECTABLE INTERVAL TIMER FOR CLOCKS

Ralph C. Robinson, Athens, Ga., and David Morrison, Davidson, N.C., assignors to General Time Corporation, Stamford, Conn., a corporation of Delaware

Filed June 6, 1967, Ser. No. 643,858
Int. Cl. G04b 23/06, 13/00; G04c 21/30
U.S. Cl. 58—16.5 8 Claims

ABSTRACT OF THE DISCLOSURE

A standard alarm clock modified to give an audible and visual alarm at pre-selected time intervals, from a few to 24 hours, and having a manual operator which silences the alarm and starts the next timing cycle. The clock is mounted in a case having a pill compartment enabling the user, alerted by the alarm, to obtain and take medicine.

DESCRIPTION OF THE INVENTION

This invention relates to alarm clocks and more particularly concerns a clock capable of signalling at regular, selectable intervals.

Medical treatments, such as the taking of pills, are often prescribed for regular intervals with the cycle running up to 24-hour, or daily, applications. It is human nature to forget such schedules, particularly when they are new and unfamiliar, and also when they become too familiar and without novelty.

It is the aim of the present invention to provide an alarm clock mechanism which can be easily and conveniently set to give a signal at any one of a number of selectable time intervals, thus providing a reliable reminder for the taking of medicine or any other repetitive activity.

It is also an object of the invention to provide a mechanism of the above kind which is reliable in operation, capable of economical large-scale manufacture, and suitable for incorporation into an otherwise standard clock assembly.

A collateral object is to provide a mechanism of the above kind with a case or housing embodying a lockable pill compartment providing a convenient place to obtain pills as the user shuts off the interval signal and starts the next cycle.

In more detail, it is an object to provide a mechanism as characterized above which gives both an audible signal and a visual signal at the end of each timed interval, the visual signal being in the form of a pop-up button that, when manually depressed, shuts off the audible alarm, locks in its down or off position, and resets the timing mechanism to start a new cycle of the selected interval.

Other objects and advantages of the invention will become apparent upon reading the following detailed description and upon reference to the drawings, in which:

FIGURE 1 is a perspective of a clock embodying the invention;

FIG. 2 is a fragmentary perspective similar to FIG. 1 but with parts shown in alternate positions;

FIG. 3 is a top plan of the mechanism embodied in the clock of FIG. 1;

FIG. 4 is a rear perspective, somewhat expanded, of a portion of the mechanism shown in FIG. 3;

FIG. 5 is a rear perspective of another portion of the mechanism shown in FIG. 3;

FIG. 6 is an enlarged section taken through a portion of the mechanism shown in FIG. 5; and

FIG. 7 is an exploded perspective of the parts shown in FIG. 6.

While the invention will be described in connection with a preferred embodiment, it will be understood that we do not intend to limit the invention to that embodiment. On the contrary, we intend to cover all alternatives, modifications and equivalents as may be included within the spirit and scope of the invention.

Turning to the drawings, there is shown a clock **10** embodying the invention and encased in a housing **11** having a dial **12** over which moves a stack of hands including a second hand **13**, a minute hand **14**, an hour hand **15** and an alarm setting hand **16**. Within the housing, a pair of frame plates **17** and **18** mount the dial **12**, the hands **13–15**, a synchronous motor **19** and a timing train **20** driven by the motor **19**. The motor **19** has an output pinion **21** which meshes with a second wheel **22** that is secured to a shaft **23** on which the second hand **13** is mounted. A pinion **24** on the shaft **23** engages a wheel **25** which is frictionally held against a pinion **26** by a spring device **27**, and the pinion **26** meshes with a minute wheel **28** secured to a sleeve **29** on which the minute hand **14** is mounted. A pinion **31** on the sleeve **29** drives, through a wheel **32** and a connected pinion **33**, an hour wheel **34** secured to a sleeve **35** on which the hour hand **15** is mounted.

The clock **10** has a conventional alarm provided by a vibrator **40** anchored to the rear frame plate **18** in the magnetic field in the motor **19**. The vibrator **40** is normally held disabled, or off, by a lever **41** pivoted in a notch **42** of the frame plate **18** and biased away from the vibrator **40** by one arm of a spring **43**. The other end of the lever **41** bears against a trip gear **44** slidably mounted on a shaft **45** and in meshing engagement with the gear **33** so as to rotate at the speed of the hour gear **34**. A cam gear **46** is positioned on the shaft **45** adjacent the trip gear **44**, and the cam gear is coupled by a pinion **47** to an alarm setting gear **48** on a sleeve **49** that carries the alarm setting hand **16**. The cam gear **46** carries a cam **51**, and the trip gear **44** is formed with a slot **52**. When the cam **51** is alined with the slot **52**, the trip gear **44** can move axially and the spring **43** swings the lever **41** away from the vibrator **40** thus sounding the alarm.

A manual alarm shut-off bar **53** slides in the frame plate **18** and, when pushed in, the end of a slot **54** in the bar **53**, which embraces the lever **41**, cams the lever **41** against the vibrator **40**. One end of the spring **43** detents in notches **55** in the bar **53** to establish alarm set, and alarm off, positions.

For time setting, a setting shaft **60** with a knob **61** that extends from the rear of the housing **11** is mounted for rotation and axial movement in the frame plates **17**, **18**. Pulling rearwardly on the knob **61** causes a lug **62** to engage a slotted collar **63** on the gear **26**, thus coupling the knob **61** with the minute and hour hands. For alarm setting, the shaft **60** is moved forward so that the lug **62** engages a slotted collor **64** on a wheel **65** that meshes with the alarm setting gear **48**.

In carrying out the invention, the clock **10** includes a signal device in the form of a second alarm vibrator **65** fixed to the frame plate **18** in the magnetic field of the motor **19** and controlled by an arm **66** on a signal lever **67**. Preferably, the vibrator **65** is formed differently from the vibrator **40** so as to have a slightly different sound when freed by the arm **66**.

Pursuant to the invention, a cam in the form of a cam wheel **70** is drivingly coupled to the timing train **20** and formed with a plurality of cam tracks for tripping the signal lever **67** and sounding the alarm vibrator **65**, a manual control **71** is provided for selecting one of the cam tracks on the cam wheel **70**, and each cam track is formed to trip the signal lever **67** at different time intervals. In the illustrated construction, the signal lever

67 is pivoted on a shaft 72 mounted in the frame plates 17, 18, and the signal lever 67 is biased upwardly by a spring 73 toward a signal-causing position in which the arm 66 clears the vibrator 65.

A latch 75 couples the cam wheel 70 and the signal lever 67, and the latch is shiftably mounted by being pivoted on a shaft 76 extending between the frame plates 17, 18. The signal lever 67 and the latch 75 have engageable latching surfaces in the form of an edge 77 on the lever 67 and a stub pin 78 on the latch 75. With the pin 78 over the edge 77, the latch 67 is held down against the bias of the spring 73 in the alarm off position with the arm 66 engaging and disabling the vibrator 65.

The cam tracks on the cam wheel 70 and the latch 75 have mutually engaging camming means for slightly bending the latch 75 and moving the pin 78 from the edge 77. In the arrangement illustrated, the cam tracks are shallow, radially-spaced, circular grooves 81 in one of the flat faces of the cam wheel 70, and the camming means includes a finger 82 on the latch 75 which rides in the grooves 81 and peripherally spaced lobes 83 in the grooves 81. Preferably, one of the grooves 81 has no cam lobes 83 so that when the finger 82 rides in that groove there will be no operation of the alarm vibrator 65. In the preferred construction, the cam wheel 70 is driven at a rate of one revolution per 24 hours and there are five grooves 81; the innermost groove having no lobes, the next groove having six equally spaced lobes, the next having four lobes, the next groove two lobes, and the outer groove only a single lobe 83. This means that with the finger 82 in the inner groove, the signal vibrator 65 will not sound, with the latch finger in the adjacent groove 81 the alarm will sound four hours after each setting, the next groove establishes a six-hour cycle, the next a twelve-hour cycle, and the outer groove 81 a twenty-four hour or daily cycle for sounding of the alarm vibrator 65.

To set the latch finger 82 into any one selected groove 81, the manual control 71 which extends rearwardly from the housing 11 is fixed to a shaft 85 journalled in the frame plates 17, 18 which carries a pinion 86 that meshes with a gear segment 87 formed on the latch 75. Suitable indicia marks 88 are provided on the back of the housing 11. Turning of the manual control 71 thus rotates the pinion 87 and drives, through the gear segment 87, the latch 75 about its pivot shaft 76 so as to position the finger 82 in the groove 81 that corresponds to one of the indicia marks 88. The seating of the finger 82 in one of the grooves 81 provides a detenting action that holds the latch 75 in the position set by the control 71.

For coupling the cam wheel 70 to the timing train 20, the cam wheel is journalled on a shaft 91 adjacent a driver 92 which is frictionally engaged for rotation with a gear wheel 93. The gear wheel 93 is connected by an intermediate wheel 94 to the pinion 33 so as to rotate at the desired one revolution per 24-hours rate. In the illustrated construction, the driver 92 is fixed to a hub 95 that is splined to the shaft 91, and a spring device 96 presses, through an anti-wear disk 97, the gear wheel 93 against the driver 92 to establish a frictional drive. A one-way connection between the driver 92 and the cam wheel 70 is provided, in the preferred arrangement, by a pin 98 on the cam wheel 70 fitting in an arcuate slot 99 in the driver 92.

The gear wheel 93 rotates clockwise as seen in FIG. 5 at a constant rate, frictionally pulling the driver 92 also clockwise. The end of the slot 99 abuts the pin 98 so as to drive the cam wheel 70 also clockwise. The shaft 91 carries a manual control 100 that extends rearwardly from the clock housing 11 and which permits manual turning of the driver 92 and hence rotation of the cam wheel 70 ahead of the gear wheel 93. It will also be seen that the cam wheel 70 can be advanced ahead of the driver 92 by virtue of the one-way connection; the pin 98 simply moving away from the end of the slot 99.

In keeping with the invention, a manual control is provided for moving the signal level 67 to off position, thus silencing the alarm vibrator 65, and a pawl 102 on the signal lever 67 is arranged to advance the cam wheel 70 when the signal lever 67 moves to off position, thus separating the finger 82 from the cam lobe 83 that tripped the alarm into action. In the preferred arrangement, the manual alarm-off control is a signal button 103 slidably mounted in the top of the housing 11 and bearing a suitable legend. The button 103 is secured to a slide bar 104 which, in turn, is connected to the signal lever 67 by a pin 105 and a slot 106 connection. The pin and slot connection 105, 106 gives some freedom for the parts to float so that slight misalinement between the frame plate mounted signal level 67 and the housing guided button 103 will not cause binding in their operation. When the signal lever 67 moves up to signal-causing position, the button 103 rises (see FIG. 2) giving a visual signal that the alarm has sounded. Pushing the button 103 down moves the signal lever 67 back to its off position.

The pawl 102 is pivoted at 108 on the signal lever 67 and formed with a finger portion 109 which engages a circular array of ratchet teeth 110 formed on the cam wheel 70. A spring 111 is interposed between the pawl 102 and the signal lever 67 to bias the finger portion 109 toward the ratchet teeth 110. A tail portion 112 on the pawl 102 is positioned to abut a post 113 extending between the frame plates 17, 18 and prevent excessive counterclockwise movement of the pawl 102 under the force of the spring 111. In operation, movement of the signal lever 67 down to off position causes the pawl finger portion 109 to engage the ratchet teeth 110 and slightly advance the cam wheel 70. It will be recalled that the signal lever 67 is unlatched for movement to signal-causing position by one of the cam lobes 83 engaging the finger 82 to shift the latch pin 78 from the edge 77. When the pawl 102 slightly advances the cam wheel 70 incident to turning the alarm off, the actuating lobe 83 is moved from under the finger 82 and the latch 75 is ready to return to latching position with the pin 78 snapping over the edge 77 as soon as the signal lever 67 reaches its off position. This movement of the cam wheel 70 does not disturb the timing interval because of the one-way connection between the cam wheel 70 and the driver 92. The slight advance movement of the cam wheel through the pawl 102 simply pulls the pin 98 away from the end of the slot 99 and the cam wheel 70 simply waits until the lost motion is taken up and the end of the slot 99 catches up to the pin 98 and resumes drive of the cam wheel.

As a feature of the invention, the housing 10 is formed with a small pill compartment 115 preferably having a top 116 which can be opened and closed. The compartment 115 provides a convenient place to store pills being taken under the scheduling of the clock 10.

Operation of the clock can now be readily seen. The clock can function in the normal manner of an alarm clock, with the user controlling the setting of the hands and operation of the alarm vibrator 40 through the setting knob 61 and the alarm shut-off bar 53. With the manual control 71 set in the zero position so that the finger 82 rides in the cam groove 81 having no lobes, the alarm vibrator 61 will remain silent.

To use the interval timing feature, the control 71 is set to the desired interval, from four to twenty-four hours in the embodiment described. The manual control 100 is then turned to advance the cam wheel 70 until a lobe in the selected cam track 81 shifts the latch 75 and causes the alarms, both the audible vibrator 65 and the button 103, to go into operation. The user then presses the button 103 down and the device is set to sound the alarm again at the end of the next selected interval. Each time the alarm sounds, pressing the button 103 resets the mechanism for another one of the selected intervals. The pill compartment 115 remains readily accessible each time the alarm is turned off and reset.

It can thus be seen that the clock **10** can be easily manipulated much in the manner of a normal alarm clock. The mechanism is reliable and capable of large-scale, economical production.

We claim as our invention:

1. A clock comprising, in combination, a stack of hands, a driven timing train coupled to said hands, a cam drivingly coupled to said timing train and having a plurality of cam tracks, an alarm signal, means positioned to be tripped from a set position by any one of said cam tracks to operate said signal, a first manual operator for resetting said means, and a second manual operator for selecting which of said cam tracks will trip said means, each of said cam tracks being formed to trip said means at different time intervals as said cam is driven.

2. The combination of claim **1** in which said clock is encased in a housing, and said housing includes a compartment for storing pills or the like.

3. In a clock having a frame mounting a driven timing train, the combination comprising, a cam wheel drivingly coupled to said timing train and having a plurality of spaced cam tracks, a signal lever mounted on said frame for movement between off and signal-causing positions and having a latching surface, a signal device positioned to be operated when said signal lever is in said signal-causing position, a latch shiftably mounted on said frame and having a latching surface engageable with the latching surface of said signal lever to hold the lever in off position, said cam tracks and said latch having mutually engaging camming means for moving said latch to release said signal lever and with each track being adapted to cause a different number of lever releasing latch movements in one complete revolution of said cam wheel, a first manual control for moving said signal lever from signal-causing position to off position, and a second manual control for shifting said latch to bring the camming means thereon into cooperative relation with a selected one of said tracks.

4. The combination of claim **3** in which one of said cam tracks has no camming means so that, when said latch camming means is in cooperative relation with that track, the latch does not release said signal lever upon rotation of said cam wheel.

5. The combination of claim **3** in which said cam tracks are shallow, radially spaced, circular grooves in one flat face of said cam wheel, and said camming means includes a finger on said latch and peripherally spaced lobes formed in said grooves.

6. The combination of claim **3** in which said signal device is an audible alarm, and said first manual control is a button coupled to said signal lever and comprising a visual signal when shifted by said lever as the lever moves to said signal-causing position.

7. The combination of claim **6** including an outer housing, said button being slidably mounted in said housing, and said housing having a compartment for storing pills or the like.

8. In a clock having a frame mounting a driven timing train, the combination comprising, a gear wheel coupled to said train for constant rotation, a cam wheel freely journalled adjacent said gear wheel, said cam wheel having a circular array of ratchet teeth and a plurality of spaced cam tracks, a driver frictionally engaged for rotation with said gear wheel and having a one-way connection for advancing said cam wheel, a signal lever mounted on said frame for movement between off and signal-causing positions and having a latching surface, means biasing said lever toward said signal-causing position, a pawl on said signal lever positioned to engage said ratchet teeth and advance said cam wheel when the signal lever moves to said off position, a signal device position to be operated when said signal lever is in said signal-causing position, a latch shiftably mounted on said frame and having a latching surface engageable with the latching surface of said signal lever to hold the lever against said bias in off position, said cam tracks and said latch having mutually engaging camming means for moving said latch to release said signal lever and with each track being adapted to cause a different number of lever releasing latch movements in one complete revolution of said cam wheel, a first manual control for moving said signal lever from signal-causing position to off position, a second manual control for shifting said latch to bring the camming means thereon into cooperative relation with a selected one of said tracks, and a third manual control for rotating said driver in its cam wheel advancing direction.

References Cited

UNITED STATES PATENTS

1,264,897 5/1918 Case.

RICHARD B. WILKINSON, Primary Examiner

J. F. GONZALES, Assistant Examiner

U.S. Cl. X.R.

58—21.15