(19) Europäisches Patentamt
European Patent Office
Office européen des brevets

(11) EP 0 781 915 A1

(12) EUROPEAN PATENT APPLICATION

(43) Date of publication:
02.07.1997 Bulletin 1997/27

(51) Int. Cl.[6]: **F02M 51/08**, F02M 61/12, F02M 61/16

(21) Application number: **96203324.7**

(22) Date of filing: **26.11.1996**

(84) Designated Contracting States:
DE FR GB

(30) Priority: **26.12.1995 US 576984**

(71) Applicant: **GENERAL MOTORS CORPORATION**
Detroit Michigan 48202 (US)

(72) Inventors:
- **Zdyb, Gary Michael**
  Rochester, New York 14624 (US)
- **Lavan, Michael Brian**
  Rochester, New York 14623 (US)
- **Muller-Girard, Otto, Jr.**
  Rochester, New York 14622 (US)
- **Bonnah, Harrie William, II**
  East Grand Rapids, Michigan 49506 (US)
- **Wahba, Brent Jack**
  Honeoye Falls, New York 14472 (US)
- **Sofianek, Jay Keith**
  Livonia, New York 14487 (US)
- **Ciesinski, Chester Henry**
  Adams Basin, New York 14410 (US)

(74) Representative: **Denton, Michael John**
Patent Section
1st Floor
Gideon House
28 Chapel Street
Luton Bedfordshire LU1 2SE (GB)

(54) Fuel injector

(57) A fuel injector (10), for use on an internal combustion engine includes a tubular injector body (12) defining an axial fuel passage. Disposed within the injector body is an armature (146), a solenoid assembly (18) which includes a spool-like bobbin (34) with a central through-bore and a wound wire coil (36). A pole piece (50) includes a tubular, cylindrical pole (48) having, at its terminal end, a working surface (66). The cylindrical pole (48) is configured for axial disposition within the central through-bore of the bobbin such that it is positioned with the working surface (66) intermediate of the ends of the wire coil. An axially extending non-magnetic cylindrical tube (64) has a first end received about the terminal end of the cylindrical pole (48) and has a second end, disposed axially downstream of the working surface of the pole (48) and of the central through-bore of the bobbin (34) within the axial fuel passage of the tubular injector body (12). The tubular member (64) is configured to receive the armature (146) and includes a radially inwardly extending, annular bearing surface (156) disposed intermediate of the first and the second ends for circumjacent, sliding support of said armature (146) therein. The second end of the non-magnetic tubular member (64) may cooperate with the injector tubular body (12) to form a seal against fuel entry into the wound wire coil (36) of the solenoid actuator.

Fig.3.

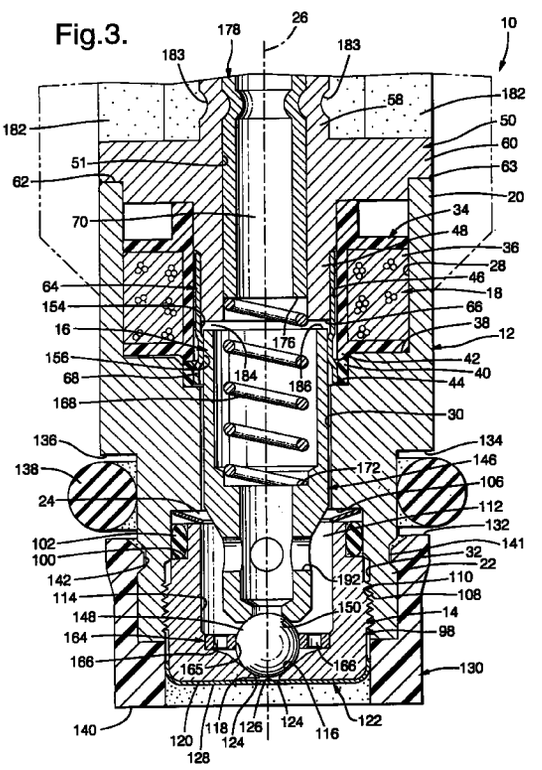

EP 0 781 915 A1

Description

TECHNICAL FIELD

The invention relates to fuel injectors for delivery of fuel to the intake system of an internal combustion engine.

BACKGROUND OF THE INVENTION

In electromagnetic fuel injectors for internal combustion engines it is preferable that the coil windings in the solenoid actuator be protected from excessive exposure to fuel in order to assure reliable performance. Chemical constituents in the fuel degrade the insulation and metal of the windings which can, over time result in degraded injector operation.

Use of elastomeric seals between injector components and a fuel resistant bobbin material is intended to prevent the passage of fuel to the coil windings. It is known to extend the upper pole piece to a location below that of the coil assembly where it may be used to establish a seal with the injector body. Such a design may be effective for sealing of the coil assembly from the fuel supply, however the efficiency of the magnetic circuit is not optimized due to the placement of the working air gap below the coil assembly. Non-optimal placement of the working air gap may result in excess magnetic flux leakage between the pole piece and parallel injector body surfaces which reduces the flux acting across the working air gap to move the armature.

SUMMARY OF THE INVENTION

Accordingly it is an object of the present invention to provide a fuel injector, for use in an internal combustion engine, having an actuator assembly which seals the coil against exposure to the fuel while optimizing the location of the working air gap relative to the coil.

A feature of the invention is to provide a pole piece having its lower, working surface disposed intermediate the ends of the coil bobbin. A non-magnetic, tubular extension member is fixed to the lower pole piece, adjacent the working surface and extends the pole piece beyond the coil to seal. A seal is established, between the non-magnetic extension and the injector body, against ingress of fuel into the coil assembly.

An additional feature of the invention may be to provide a reduced diameter, annular region intermediate of the ends of the pole piece tubular extension. The annular region may function as a bearing surface for an armature disposed for reciprocal movement relative to the working surface of the pole piece.

An embodiment of the present invention is described below, by way of example only, with reference to the accompanying drawings.

BRIEF DESCRIPTION OF THE DRAWINGS

Figure 1 is a side view of a fuel injector embodying features of the present invention;

Figure 2 is a cross section of the fuel injector of Figure 1 taken along line 2-2 of Figure 1;

Figure 3 is an enlarged view of a portion of Figure 2;

Figure 4 is an enlarged view of a portion of Figure 2, with parts removed for descriptive purposes;

Figure 5A is a sectional view of a non-magnetic cylindrical tube guide tube embodying features of the present invention;

Figure 5B is an enlarged view of a portion of the cylindrical tube guide of Figure 5A;

Figure 6A is a sectional view of second embodiment a non-magnetic cylindrical tube guide tube embodying features of the present invention; and

Figure 6B is an enlarged view of a portion of the cylindrical tube guide of Figure 6A.

DESCRIPTION OF THE PREFERRED EMBODIMENT

Referring to Figures 1 and 2, an electromagnetic fuel injector, designated generally as 10, includes as major components thereof a body 12, a nozzle assembly 14, a valve member 16 and a solenoid actuator assembly 18 used to control the movement of the valve member 16.

In the construction illustrated, the body 12 is of cylindrical, hollow tubular configuration and is of such external shape as to permit direct insertion, if desired, of the injector 10 into a socket provided for this purpose in an engine intake manifold, not shown.

The body 12, Figure 3, includes an enlarged upper solenoid case portion 20 and a lower end, nozzle case portion 22 of reduced internal and external diameter relative to the solenoid portion 20. An internal cylindrical cavity is formed in the body 12 by a stepped bore therethrough that is substantially coaxial with the axis 26 of the body. In the construction shown, the cavity 24 includes a cylindrical upper wall 28, a cylindrical intermediate wall 30 and a cylindrical lower wall 32. Wall 30 is of a reduced diameter relative to upper and lower wall portions 28 and 32, respectively.

Solenoid assembly 18 is disposed within the enlarged upper solenoid case portion 20 and includes a spool-like, tubular bobbin 34 supporting a wound wire solenoid coil 36. The solenoid assembly 18 is positioned within the upper case portion 20 adjacent shoulder 38 which extends between cylindrical upper wall 28 and the intermediate wall 30. A resilient sealing member such as o-ring 40 is disposed between a downwardly oriented (as viewed in the figures) cylindrical extension 42 located about the inner diameter of the tubular bobbin 34 and a seal shoulder 44 in the cylindrical intermediate wall 30. The bobbin 34 is provided with a central through bore 46 configured to encircle the lower, reduced diameter portion 48 of pole piece 50. A pair of

terminal leads 52, Figure 1, are operatively connected at one end (not shown) to the solenoid coil 36 and each such lead has its second end extending upwardly through an outer, overmolded casing 54, described in further detail below, to terminate in a terminal socket 56, for connection of the fuel injector to a suitable source of electrical power in a manner well known in the art.

Pole piece 50 includes an upper cylindrical portion 58, a centrally located circular, radial flange portion 60 and the lower reduced diameter cylindrical pole 48. The circular, radial flange portion 60 is slidably received at its outer peripheral edge within the cylindrical upper wall 28 of the body 12 to thereby close the enlarged upper solenoid case portion 20 of the body 12 and retain the solenoid assembly 18 therein. The pole piece 50 is axially retained within the upper cylindrical portion of the body 12 as by having its flange portion welded or otherwise suitably bonded to the shoulder 62 along the upper, opened end of wall 28.

Formed integrally with the pole piece 50 and extending downwardly from the flanged portion 60 is the lower cylindrical pole 48. Lower pole 48 is of a suitable exterior diameter so as to be slidably received in the central through bore 46 that extends coaxially through the coil bobbin 34 and of a suitable axial length to extend the working surface 66 to an optimum location intermediate the ends of the coil central through bore 46. Location of the working surface 66 of the pole piece 48 centrally of the coil axial length is important for maximization of magnetic efficiency. Received about the lower end of the lower cylindrical pole 48 of the pole piece 50 is a cylindrical tube 64 of non-magnetic material such as stamped or drawn stainless steel or other suitable material, Figures 3 and 4. The tube may be welded, bonded or otherwise sealed to the lower pole piece 48 so as to prevent fuel penetration of the joint between the tube 64 and the pole. The tube 64 extends axially downwardly beyond the lower end, or working surface 66 of the lower cylindrical pole 48, to a location substantially downstream of the pole. At its terminal end, the outer surface 68 of the non-magnetic tube 64 interfaces with resilient sealing member 40, seated between the lower end of the coil bobbin extension 42 and seal shoulder 44 of the body 12, thereby establishing a seal between the central, fuel passage 70 extending the length of fuel injector 10 and the solenoid assembly 18. The cylindrical, non-magnetic tube 64 operates to extend the pole piece 48 below the coil 36 to establish an efficient seal with the injector body 12 while providing an efficient magnetic circuit design by allowing working surface 66 to be located optimally within the coil through bore 46. The pole piece 50 combines with non-magnetic, cylindrical tube 64 and injector body 12 to define a dry coil design which effectively isolates the coil windings 36 from fuel exposure. In the event of fuel leakage past the seal member 40, the fuel is prevented from escaping the injector body, such as by a welded seal 63 at the interface of pole piece flange 60 and shoulder 62 of injector body upper case portion 20.

The pole piece 50, in the construction illustrated, is also provided with an upwardly extending cylindrical boss 58. The boss 58 is configured to receive an axially upwardly extending, deep drawn fuel inlet tube 74. The inlet tube has a first inlet end 76 having a flanged end portion 78 extending from the upper end thereof. The deep drawn fuel inlet tube is preferably formed using sheet stock which results in a final product having a nominal wall thickness. The fuel inlet tube 74 is fixed to the pole piece 50 and is overmolded to define upper housing 54, using a suitable encapsulant material which, as described above, also includes an integral terminal socket 56 with leads 52. The encapsulant allows the inner diameter of the fuel inlet tube to be tightly controlled while the outer diameter of the upper housing portion of injector 10 is controlled during the molding of the encapsulant. An upper seal shoulder 86 formed in the overmolded housing 54 is axially spaced from the tube flange 78 to define an annular seal groove 88 configured to carry a resilient sealing member such as o-ring 90 for leak free attachment to a source of pressurized fuel, not shown.

Within the fuel inlet tube 74, radially inwardly extending dimples 92 are disposed for engagement with the flanged portion 94 of the injector fuel filter assembly 96. The dimples 92 inhibit undesirable downstream translation of the filter assembly 96 in the fuel inlet tube 74.

The nozzle assembly 14 includes a nozzle body 98 having a cup-shaped, tubular configuration with a stepped upper shoulder 100 for receiving a sealing member such as o-ring 102. The sealing member 102 is disposed between the shoulder 100 on the outer surface of the nozzle body 98 and, the shoulder 106 which extends between the intermediate wall 30 and the lower wall 32 of the lower end nozzle case portion 22 of the body 12, thereby establishing a seal against leakage at the interface of the nozzle assembly 14 and the body 12. The nozzle body 98 includes a series of external threads 108 which engage corresponding internal threads 110 in the lower wall 32 of the body 12 providing axial adjustability of the nozzle body within the injector body. An internal cylindrical cavity 112 in the nozzle body 98 is defined by an inner cylindrical wall 114 which extends from the open, upper end of the nozzle body to terminate in an annular, frustoconical valve seat 116 disposed about an axially aligned, fuel discharge opening 118 at the lower end thereof. The cylindrical cavity 112 operates as a fuel supply repository within the nozzle assembly 12.

Over the exterior of the lower end 120 of the nozzle body 98 is placed a fuel spray director plate 122. The director plate 122 is formed of thin sheet stock and includes fuel directing openings 124 extending from the upstream side 126 to the downstream side 128. Fuel passing through the fuel discharge opening 118 in the valve seat 116 is delivered to the upstream side, or face 126 of the director plate 122 where it is distributed across the face to the fuel openings 124. The openings

124 are oriented in a predetermined configuration which will generate, in the discharged fuel, a desired spray configuration.

A cylindrical retainer sleeve 130 is also engaged over the lower end of nozzle body 98. The retainer includes an upper annular shoulder 132 which defines, with shoulder 134 of body 12, an annular groove 136 for the placement of resilient sealing member 138. The lower, downstream end 140 of the retainer sleeve 130 extends beyond the downstream side 128 of the director plate 122 and functions to protect the director plate 122 from contact with surfaces which could damage the plate by altering the precise alignment of the fuel directing orifices 124. The cylindrical retainer sleeve 130 is preferably constructed of a durable, temperature resistant plastic such as nylon and is snapped over the lower end, nozzle case portion 22 of the body 12 where small annular bead 142 on the inner wall of the cylindrical retainer sleeve 130 engages a corresponding groove 141 on the outer wall of the nozzle case portion 22 to fix the retainer sleeve against axial movement off of the injector 10.

Referring now to the valve member 16, it includes a tubular armature 146 and a valve element 148, the latter being made of, for example, a spherical ball having a predetermined radius, which is welded to the lower annular end 150 of the tubular armature 146. The radius of the valve element 148 is chosen for seating engagement with the valve seat 116. The tubular armature 146 is formed with a predetermined outside diameter so as to be loosely slidable within the non-magnetic cylindrical tube 64 received about and extending from the lower pole piece 48. The tube 64 includes an inner cylindrical wall 154 which extends coaxially with the axis 26 of the injector 10 along which the valve member 16 is aligned for reciprocal movement. Located intermediate of the ends of the tube 64 is an armature bearing 156 which extends radially inwardly to contact the outer surface of the tubular armature 146 in a circumjacent, supportive relationship therewith. Figures 5A,5B and 6A,6B illustrate two embodiments of the tube 64 and armature bearing 156. The bearing may be defined by a region of increased thickness 158 in the tube 64', as illustrated in Figures 6A,6B, or by a mechanically reduced diameter portion 160, as is illustrated in Figures 5A,5B. In either configuration, the armature tube bearing 156,156' is formed as a radius "R" such that the axially intermediate portion of the bearing 156 has the smallest internal diameter. The radiused bearing surface prevents the tubular armature 146 from resting on, or moving across a bearing edge which would likely cause premature wear and binding of the valve member 16 while accommodating some misalignment between the tubular extension 64 and the tubular armature 146.

Positioned within the cylindrical cavity 112 of the nozzle body 98, adjacent the valve seat 116, is an annular valve guide 164. The valve guide 164 has a centrally disposed guide opening 165 that extends about the valve ball member 148 and is operable to guide the member as it moves reciprocally into and out of engagement with the valve seat 116. Fuel openings 166 extend through the valve guide 164 at circumferentially spaced locations about the annulus to allow fuel to move freely from the fuel collecting internal cylindrical cavity 112 to the valve seat 116.

The armature bearing 156 in tube 64 and the annular valve guide 164 cooperate to control the movement of the valve member 16, in the longitudinal direction, within the injector 10. The valve member element 148 of valve member 16 is normally biased into a closed, seated engagement with the valve seat 116 by a biasing member such as valve return spring 168 of predetermined spring force which is inserted into the upstream end of the tubular armature 146. The first end of the spring 168 seats against shoulder 172 which is located intermediate the ends of the armature tube while the second end of the spring 168 seats against the lower end 176 of calibration sleeve 178 inserted into the central, through bore 51 of pole piece 50. The calibration sleeve is moved axially towards the valve seat to increase the spring preload exerted on the valve member 16 in the direction of the valve seat 116. Withdrawal of the calibration sleeve 178 lessens the spring preload on the valve member 16. The calibration sleeve 178 is fixed in position within the pole piece 50 through application of a staking process in which a mechanical staking tool (not shown) is inserted into openings 182 in the overmolded housing 54. Once the desired spring preload is achieved through axial movement of the calibration sleeve 178, the staking tool moves to deform the upper cylindrical portion 58, Figure 2, of the pole piece 50 radially inwardly 183 about the sleeve 178 thereby fixing the sleeve from axial movement.

A working air gap 184 is defined between the working surface 186 at the upper end of armature tube 146 of the valve member 16 and the working surface 66 at the lower end of the pole piece 50. Upon energization of the solenoid assembly 18, the tubular armature 146 and associated valve element 148 is drawn upwardly, off of the valve seat 116, by the action of the magnetic flux field operating across the working air gap 184 which operates against the bias of the spring member 168 to close the working air gap 184. Location of the working air gap intermediate the ends of the coil 36, as herein disclosed, maximizes directed flux across the working air gap which, in turn, enhances the efficiency of the solenoid actuator and, consequently, the performance of the injector 10. Fuel enters the injector 10 from the pressurized source, through the first, inlet end 76 of the fuel inlet tube 74 where it passes through the filter element 188 of the filter assembly 96. Fuel flows the length of the tube 74, the pole piece 50, the calibration sleeve 178 and the tubular armature 146 and into the fuel chamber 112 in nozzle body 98 through circumferentially spaced openings 192 in the second end of the armature tube 146. As described above, the fuel passes through the openings 166 in the valve guide 164 and exits the valve body 98 through the opening 118 in valve

seat 116. Fuel exiting the valve seat 116 is distributed onto the upstream side 126 of the fuel director plate 122 where it is distributed to the fuel director orifices 124 passing through the plate, for discharge from the fuel injector 10. Deenergization of the solenoid assembly 18 allows the field within the magnetic circuit defined by the pole piece 50, the body 12, and the armature 146 to collapse thereby allowing the valve member return to the closed position against the valve seat 116 under the bias of the spring member 168 to stop the flow of fuel therethrough.

The foregoing description of the preferred embodiment of the invention has been presented for the purpose of illustration and description. It is not intended to be exhaustive nor is it intended to limit the invention to the precise form disclosed. It will be apparent to those skilled in the art that the disclosed embodiments may be modified in light of the above teachings. The embodiments described were chosen to provide an illustration of the principles of the invention and of its practical application to thereby enable one of ordinary skill in the art to utilize the invention in various embodiments and with various modifications as are suited to the particular use contemplated. Therefore, the foregoing description is to be considered exemplary, rather than limiting, and the true scope of the invention is that described in the following claims.

Claims

1. A fuel injector (10) comprising a tubular injector body (12) defining an axial fuel passage, a solenoid assembly (18) disposed in said injector body and including a spool-like bobbin (34) with a central through-bore (46) and a wound wire coil (36) supported thereon, a pole piece (50) including a tubular, cylindrical pole (48) having, at its terminal end, a working surface (66), said cylindrical pole configured for axial disposition within said central through-bore of said bobbin to thereby position said working surface intermediate of said wire coil, and an axially extending non-magnetic cylindrical tube (64) having a first end received about said terminal end of said cylindrical pole and a second end disposed axially of said working surface and of said central through-bore of said bobbin, within said axial fuel passage of said tubular injector body, and a seal (40), disposed between said second end of said non-magnetic cylindrical tube and said tubular injector body to define a seal against ingress of fuel to said wire coil.

2. A fuel injector (10) comprising a tubular injector body (12) having a stepped axial through-bore comprising a first, cylindrical wall (20) and an intermediate cylindrical wall (22), a solenoid assembly (18) disposed in said stepped axial through-bore of said injector body adjacent said first cylindrical wall and including a spool-like bobbin (34) with a central through-bore (46) defining a fuel passage, and a wound wire coil (36) supported thereon, a pole piece (50) including a tubular cylindrical pole (48) having a radially extending flange portion (60) and, at its terminal end, a working surface (66), said cylindrical pole configured for axial disposition within said central through-bore of said bobbin to thereby position said working surface intermediate of said wire coil and to close said first, cylindrical wall of said axial through-bore of said injector body, and an axially extending non-magnetic cylindrical tube (64) having a first end received about said terminal end of said cylindrical pole and a second end disposed axially of said working surface and of said central through-bore of said bobbin, adjacent said intermediate cylindrical wall, said second end of said cylindrical tube defining a seal with said intermediate cylindrical wall against ingress of fuel to said wire coil.

3. A fuel injector (10) comprising an injector body (12), an armature (146), a solenoid assembly (18) operable to move said armature reciprocably within said injector body, a pole piece (50) including a tubular, cylindrical pole (48) configured for disposition within said solenoid assembly, and a cylindrical tube (64) having a first end in communication with said cylindrical pole and a second end configured to receive said armature therein, said cylindrical tube including a radially inwardly extending, annular bearing surface (156) disposed intermediate of said first and second ends for circumjacent, sliding support of said armature therein.

4. A fuel injector, as defined in claim 3, said annular bearing surface having an axially extending radiused configuration.

5. A fuel injector, as defined in claim 3, said annular bearing surface having an axially extending radiused configuration such that the axially intermediate portion of said bearing surface defines a minimum internal diameter of said cylindrical tube.

6. A fuel injector (10) comprising a tubular injector body (12) defining an axial fuel passage, an armature (146), a solenoid assembly (18) disposed in said injector body, operable to move said armature reciprocally within said injector body, and including a spool-like bobbin (34) with a central through-bore (46) and a wound wire coil (36) supported thereon, a pole piece (50) including a tubular, cylindrical pole (48) having, at its terminal end, a working surface (66), said cylindrical pole configured for axial disposition within said central through-bore of said bobbin to thereby position said working surface intermediate of said wire coil, and an axially extending non-magnetic cylindrical tube (64) having a first end received about said terminal end of said cylin-

drical pole and a second end, disposed axially of said working surface and of said central throughbore of said bobbin within said axial fuel passage of said tubular injector body, configured to receive said armature therein, said cylindrical tube including a radially inwardly extending, annular bearing surface (156) disposed intermediate of said first and said second ends for circumjacent, sliding support of said armature therein.

7. A fuel injector, as defined in claim 6, further including a seal member (40), disposed between said second end of said non-magnetic cylindrical tube and said tubular injector body to define a seal against ingress of fuel to said wire coil.

8. A fuel injector, as defined in claim 6a, said annular bearing surface having an axially extending radiused configuration such that the axially intermediate portion of said bearing surface defines a minimum internal diameter of said cylinder.

Fig.1.

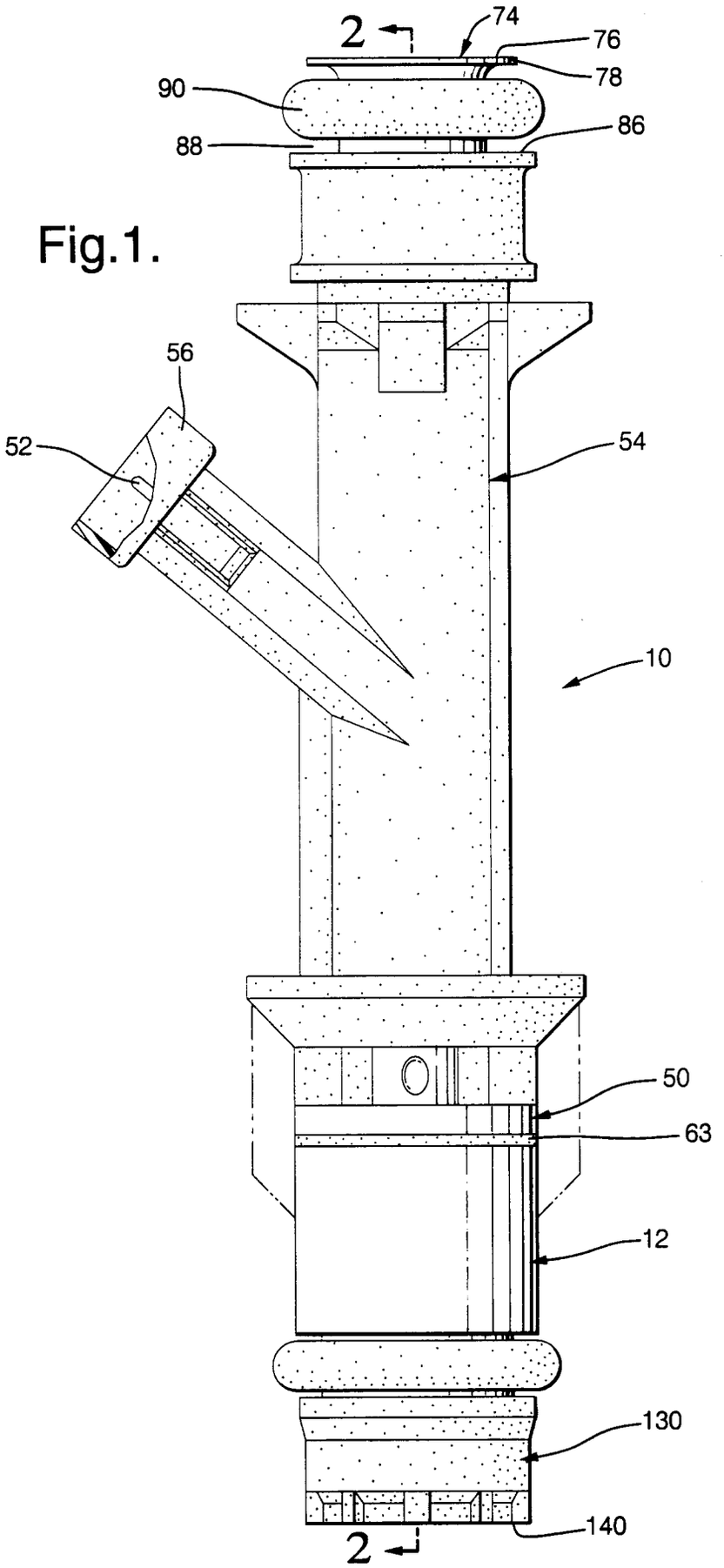

Fig.2.

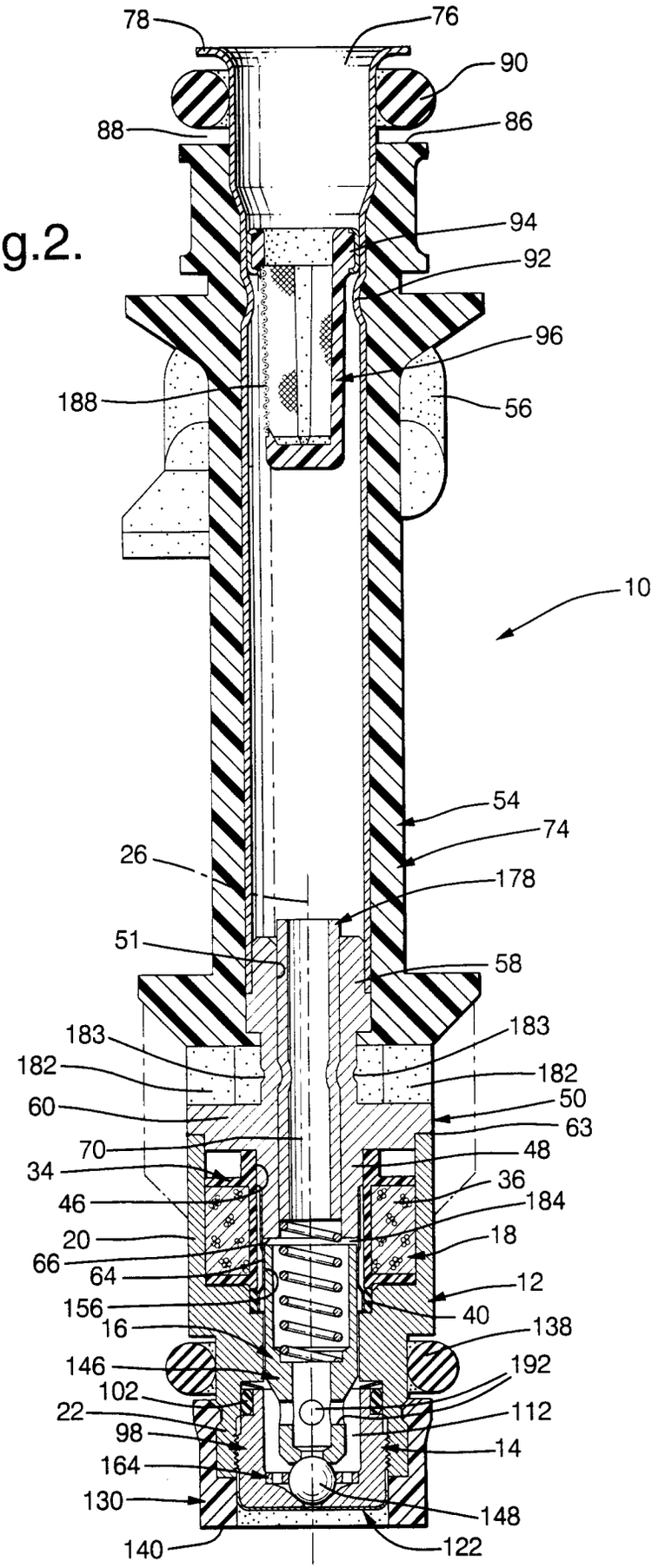
78
76
90
88
86
94
92
96
188
56
10
54
74
26
178
51
58
183
183
182
182
60
50
63
70
48
34
36
46
184
20
18
66
64
12
156
40
16
138
146
192
102
112
22
98
14
164
130
148
140
122

Fig.3.

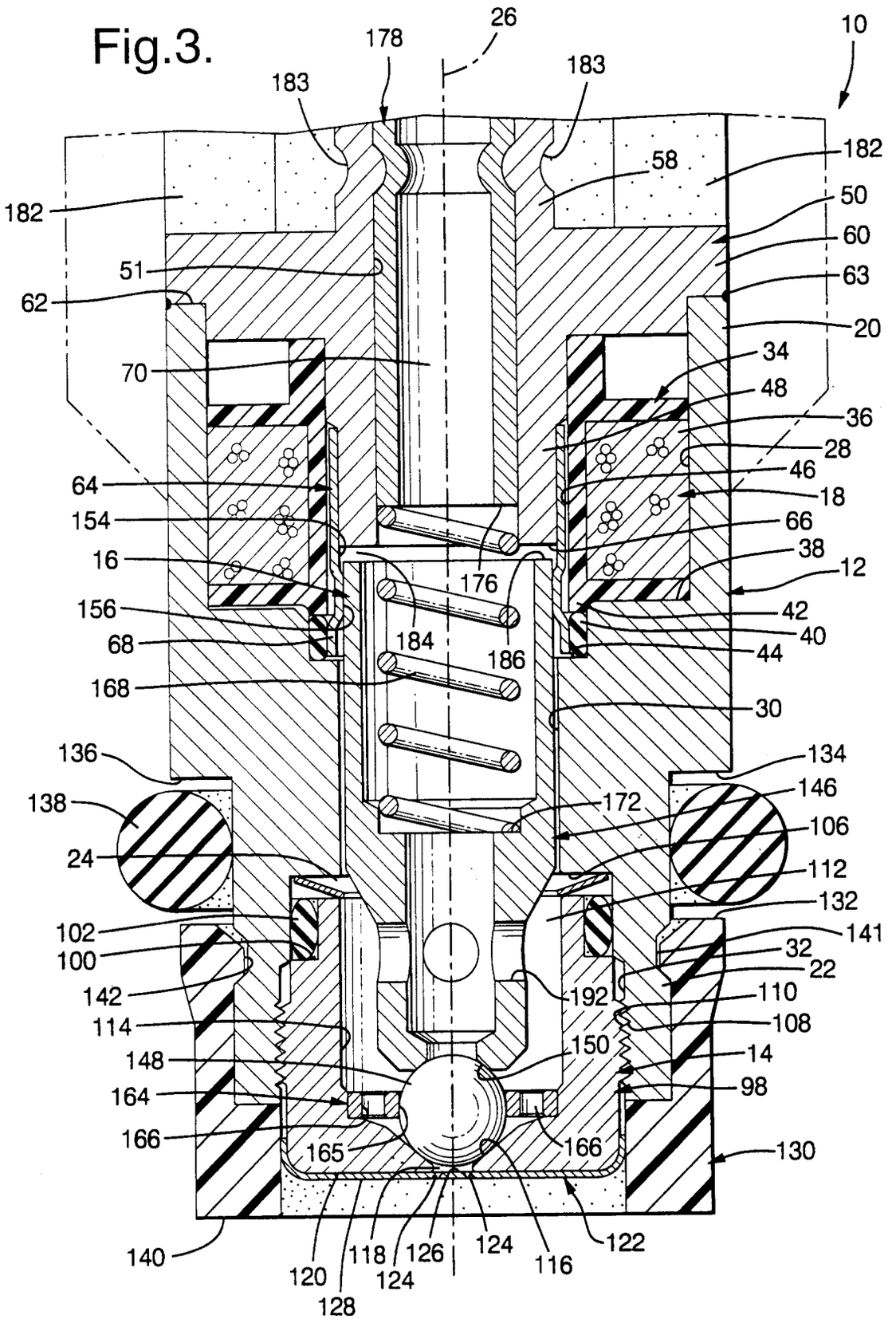
26
178
10
183
183
182
58
182
50
60
51
63
62
20
70
34
48
36
28
64
46
18
154
66
16
38
12
176
156
42
40
68
184
186
44
168
30
136
134
138
146
172
106
24
112
132
102
141
100
32
22
142
192
110
114
108
150
148
14
164
98
166
165
166
130
140
120
118
126
124
124
116
122
128

Fig.4.

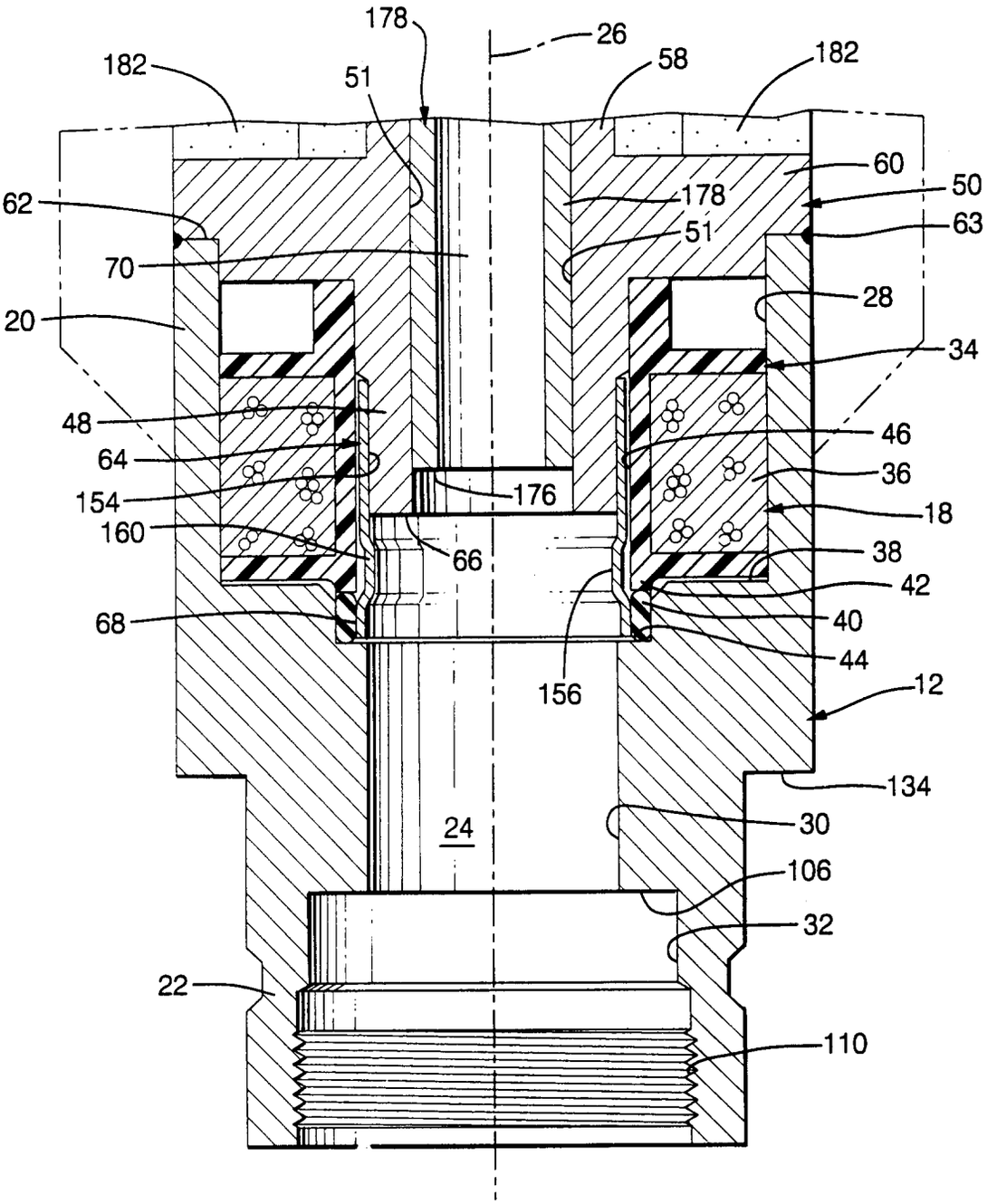
178
26
182
58
182
51
60
50
62
178
63
51
70
28
20
34
48
46
64
36
154
176
18
160
66
38
42
68
40
44
156
12
134
24
30
106
32
22
110

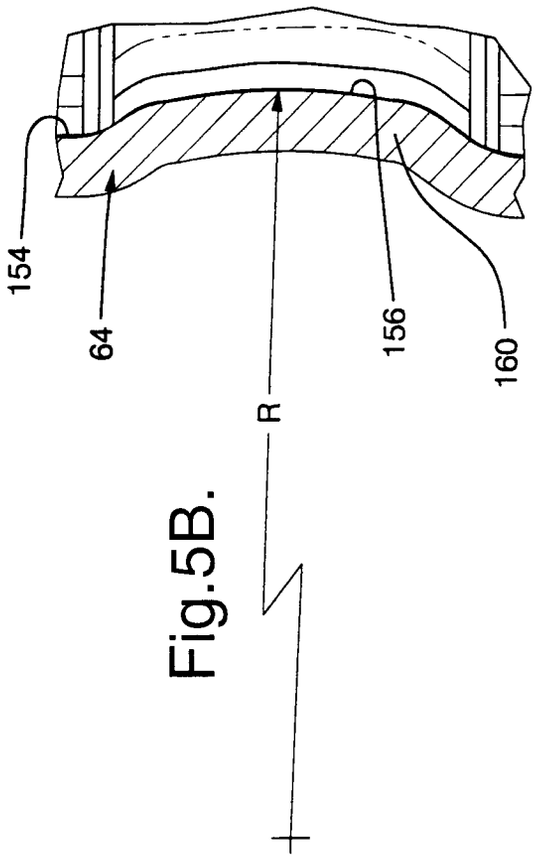

Fig.5B.

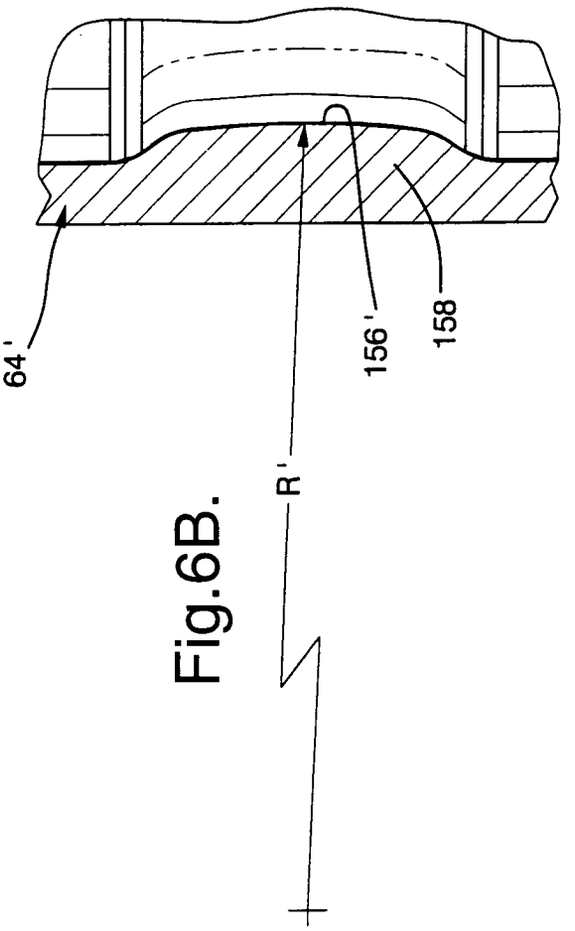

Fig.6B.

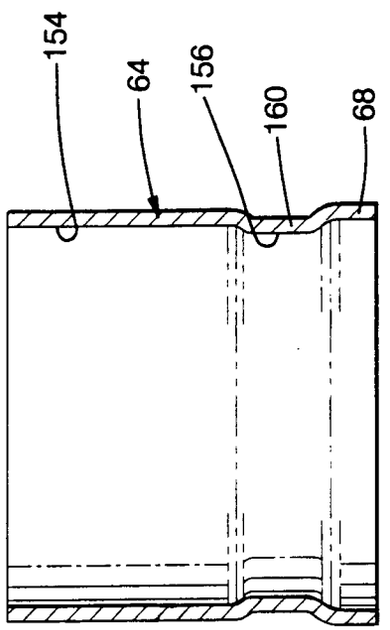

Fig.5A.

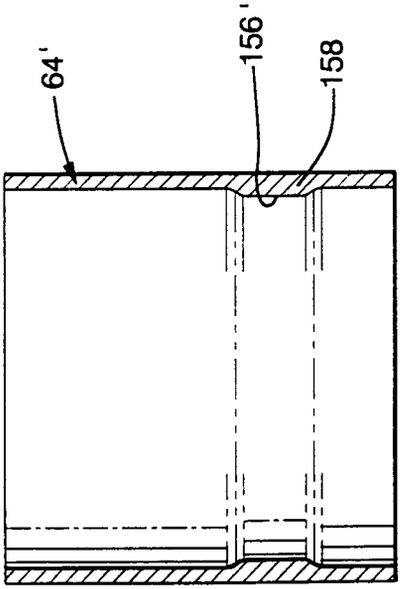

Fig.6A.

European Patent Office

EUROPEAN SEARCH REPORT

Application Number
EP 96 20 3324

DOCUMENTS CONSIDERED TO BE RELEVANT

Category	Citation of document with indication, where appropriate, of relevant passages	Relevant to claim	CLASSIFICATION OF THE APPLICATION (Int.Cl.6)
X	DE 39 42 306 A (BOSCH GMBH ROBERT) 27 June 1991	3,6	F02M51/08 F02M61/12 F02M61/16
A	* column 3, line 52 - column 4, line 8; figure 1 *	1	
A	DE 195 07 285 A (NIPPON DENSO CO) 7 September 1995 * column 5, line 25 - line 55; figure 2 *	1,2	
A	DE 20 08 830 A (SIBE) 27 August 1970 * page 5, paragraph 4; figure 2 *	1	
A	EP 0 215 527 A (SPICA SPA) 25 March 1987 * column 4, line 6 - line 32; figure 1 *	2	
A	DE 39 05 992 A (MESENICH GERHARD) 21 September 1989 * column 5, line 9 - line 14; figure 1 *	1,2	
A	DE 43 10 819 A (BOSCH GMBH ROBERT) 6 October 1994 * column 3, line 19 - column 5, line 62; figure *	1	

TECHNICAL FIELDS SEARCHED (Int.Cl.6)

F02M

The present search report has been drawn up for all claims

Place of search	Date of completion of the search	Examiner
THE HAGUE	17 March 1997	Torle, E

CATEGORY OF CITED DOCUMENTS

X : particularly relevant if taken alone
Y : particularly relevant if combined with another document of the same category
A : technological background
O : non-written disclosure
P : intermediate document

T : theory or principle underlying the invention
E : earlier patent document, but published on, or after the filing date
D : document cited in the application
L : document cited for other reasons

& : member of the same patent family, corresponding document

EPO FORM 1503 03.82 (P04C01)