April 20, 1965 M. R. JONES 3,179,448

WELLHEAD APPARATUS

Filed March 13, 1962 2 Sheets-Sheet 1

Fig. 1

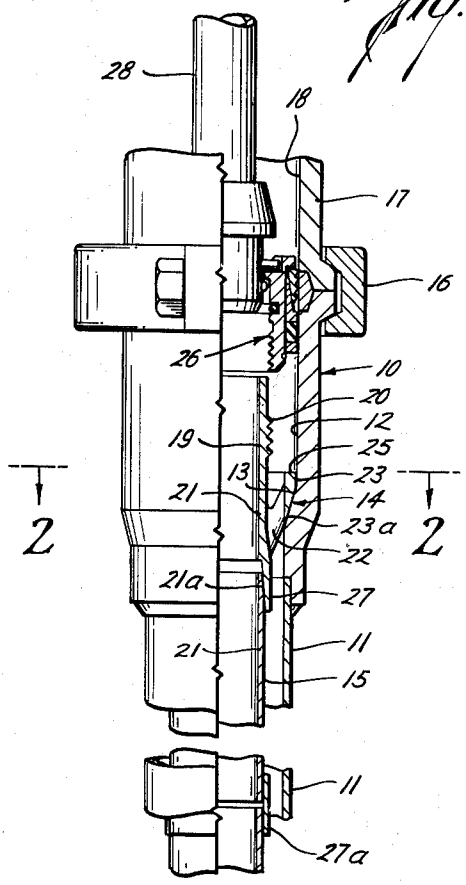

Fig. 2

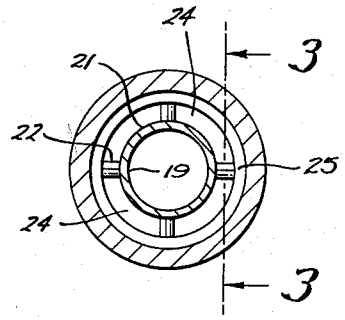

Fig. 3

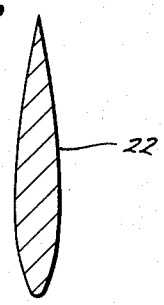

Fig. 4

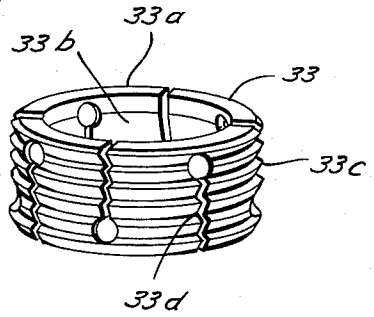

Marvin R. Jones
INVENTOR.

BY
Browning, Simms, Hyer & Eickenroht
ATTORNEYS

April 20, 1965 M. R. JONES 3,179,448

WELLHEAD APPARATUS

Filed March 13, 1962 2 Sheets-Sheet 2

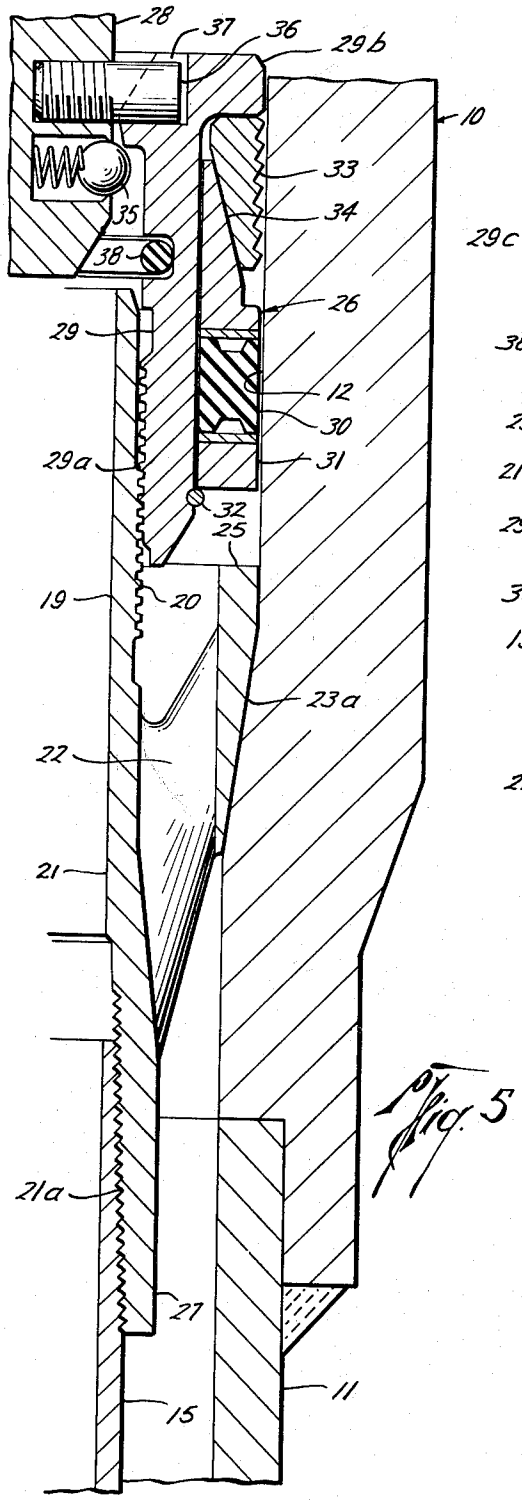

Fig. 5

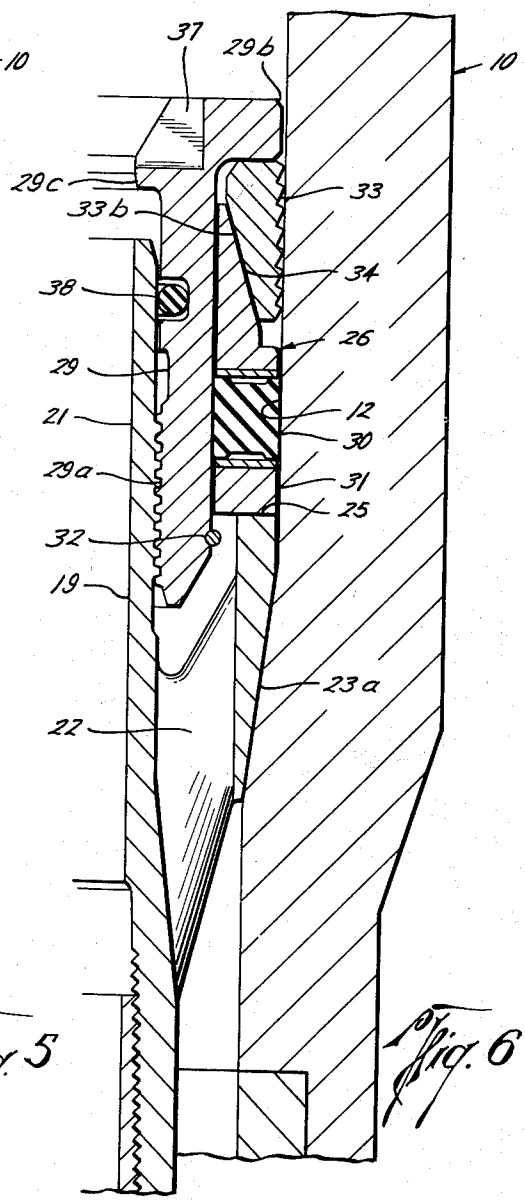

Fig. 6

Marvin R. Jones
INVENTOR.

BY
Browning, Simms, Huer & Eichenroht
ATTORNEYS

United States Patent Office

3,179,448

Patented Apr. 20, 1965

1

3,179,448

WELLHEAD APPARATUS

Marvin R. Jones, Houston, Tex., assignor to Cameron Iron Works, Inc., Houston, Tex., a corporation of Texas

Filed Mar. 13, 1962, Ser. No. 179,400
10 Claims. (Cl. 285—146)

This invention relates to apparatus for suspending casing from the head of a well; and, more particularly, to an improved mandrel or "boll weevil" type of casing hanger.

Although this latter type of hanger is of much simpler construction than the wrap-around, slip type hanger also used in suspending casing, it has heretofore presented certain operational difficulties which have detracted from its popularity. Thus, for example, the conventional solid mandrel or "boll weevil" fills so much of the bore of the wellhead that it will effectively pump well fluid beneath it, and thereby possibly cause the formation to break down as the casing is reciprocated during a scratching of the filter cake or, for that matter, during bobbing of the ship from which the casing is lowered in the completion of an offshore well. This substantial filling of the bore has also required operators to take returns from side outlets in the head beneath the hanger during cementing, despite the dangers of possibly damaging primary wellhead fittings and imposing undesirable back pressure on the well bore.

It was the expressed purpose of Yeatman Patent No. 2,346,060 to overcome at least certain of these problems by means of a mandrel type casing hanger which had radial ribs whose outer ends seated on the bowl of the head so as to define flow openings therebetween. In this manner, the annular space about the casing was connected with the bore in the head above the mandrel during reciprocation as well as upon seating of the mandrel in the bore. Upon completion of the cementing operation and removal of pressure control equipment from above the casing head, these openings were closed by an assembly which was lowered onto the mandrel and then welded between the mandrel and head to hold the mandrel down against excessive well pressure beneath it.

However, in designing this hanger, the patentee was apparently torn between the need for a substantially unrestricted opening through the bore and a firm support on the steep taper of the bowl for the hanger and the several hundreds of thousands of pounds of casing which might have to be suspended therefrom. Thus, the radial ribs on the mandrel restricted the flow path between it and the head to an area substantially less than the annular space about the casing, not only during reciprocation of the casing but even more so upon seating of the mandrel. Furthermore, the lower sides of these ribs provided considerably less than a full circle of bearing surface for seating the mandrel on the bowl in the bore, and the upper sides thereof provided considerably less than a full circle of bearing area for seating the seal and holddown assembly on the mandrel.

Still further, the ring which Yeatman proposed to weld between the mandrel and bore of the head in order to hold the mandrel down and seal off the openings therein is obviously unsuited for modern practice. This is especially true in the case of offshore wells which are completed beneath the water level, and wherein any such seal and holddown assembly would have to be lowered a

2

considerable distance and then activated from a remote location above the water level.

An object of this invention is to provide apparatus including a casing hanger of this type having a mandrel which not only provides a substantially full opening through the bore of the wellhead, but also has a full circle of seating area on the bowl in such bore.

Another object is to provide a casing hanger having such a mandrel in which the flow openings therethrough may be closed by a more conventional seal ring of resilient material supported on a full circle of bearing area on the mandrel.

A further object is to provide a casing hanger of the type above described wherein the seal and holddown assembly may be activated from within the bore and a considerable distance above the hanger by means of conventional tools lowered through the bore.

A still further object is to provide a casing hanger mandrel of the type described which has parts thereon useful both in the running of the mandrel and the securement of the aforementioned assembly in sealing and holddown position between the mandrel and wellhead bore.

These and other objects are accomplished, in accordance with the present invention, by wellhead apparatus including a casing hanger mandrel having inner and outer annular bodies which are connected by webs to form openings therebetween. A surface about the outer body seats on the bowl in the head to support the hanger on a full circle of bearing area, and means are provided on the inner body to suspend a casing therefrom within the casing to which the head is connected. More particularly, the openings between such annular bodies define a minimum flow area approximately as large as the minimum cross-sectional flow area of the annular space about the casings. The assembly for closing the openings through the mandrel and holding such mandrel down upon the bowl is adapted to be lowered onto the outer mandrel body, so that the novel mandrel of this invention not only has a full circle bearing area for seating upon the bowl, but also provides a full circle bearing engagement with respect to the bore in the head.

In a preferred form of the invention, this assembly includes a sleeve having a flange on its upper end, an annular seal ring slidably carried about the sleeve, and a locking member carried about the sleeve above the seal ring and beneath the flange on the sleeve. When this assembly has been lowered so as to land the seal ring upon the outer body of the mandrel, the sleeve is sealably and threadedly connected to the inner mandrel body to force the flange downwardly against the locking member. This deforms the seal ring into sealing engagement between the sleeve and bore of the head and causes the locking member to move outwardly into locking ngagement with respect to the bore in the head.

This make-up of the sleeve with the mandrel may be accomplished by the tool upon which the assembly is raised or lowered within the bore. Also, the threads on the mandrel for connection with the sleeve of the assembly provide a means to which a running tool may be connected for lowering or raising the mandrel with respect to its seated position on the bowl.

In the drawings, wherein like reference characters are used throughout to designate like parts:

FIG. 1 is a side view, partly in elevation and partly in

section, of a casing hanger mandrel constructed in accordance with the present invention and seated upon the bowl in the bore of a casing head, and with a seal and holddown assembly, also constructed in accordance with the present invention, in the process of being lowered by means of a running tool into sealing and holddown position on the mandrel;

FIG. 2 is a cross-sectional view of the hanger mandrel, as seen along broken line 2—2 of FIG. 1;

FIG. 3 is an enlarged cross-sectional view of the web connecting the inner and outer annular bodies of the casing hanger mandrel, as seen along broken line 3—3 of FIG. 2;

FIG. 4 is a perspective view of the locking element carried by the assembly shown in FIG. 1;

FIG. 5 is an enlarged vertical sectional view of part of the casing hanger mandrel and seal and holddown assembly of FIG. 1, but with the sleeve of such assembly shown during its make-up with the mandrel; and

FIG. 6 is a vertical sectional view similar to FIG. 5, but with the sleeve fully made up with the mandrel to effect the seal between the mandrel and bore of the casing head and hold such mandrel down upon the bowl in the head.

Referring now to the details of the above-described drawings, the wellhead apparatus shown in FIG. 1 includes a casing head 10 connected to the upper end of an outer casing 11 and having a bore 12 therethrough whose lower end forms a continuation of the inner diameter of such casing. There is a downwardly and inwardly tapering bowl 13 in the bore of the head intermediate its upper and lower ends for seating a casing hanger mandrel 14 from which an inner casing 15 is suspended concentrically within the outer casing 11 with its inner diameter forming a continuation of the bore 19 through the mandrel. The upper flanged end of casing head 10 is connected by a clamp 16 to a lower flanged end of a blowout preventer or other wellhead equipment 17 having a bore 18 therethrough forming a continuation of the upper end of the bore 12 through the casing head.

As also well known in the art, the inner casing 15 is lowered into the outer casing 11 to seat the mandrel and its lower end is anchored within the well bore by means of cement conducted downwardly therethrough and up into the annular space between the casings 11 and 15. As previously mentioned, the casing 15 may first be reciprocated within the casing 11 in order to scratch the filter cake from the walls of the well bore or for other reasons. As also described above, there may be some involuntary reciprocation of the casing 15 prior to seating of the casing hanger mandrel 14 when the casing is set in a well being completed at an underwater level, because the bobbing of the ship from which the casing is suspended is transmitted thereto.

This manipulation of the casing and the mandrel 14 is accomplished by any suitable running tool (not shown) connected to external threads 20 on the mandrel and lowered therewith through the bore of the wellhead. These threads are preferably coarse or "easy," as best shown in FIGS. 5 and 6, so that when the mandrel 14 is landed on the bowl 13, the weight of the casing string together with the frictional resistance provided by the bearing area between the mandrel and bowl will permit the running tool to be broken out from the mandrel.

More particularly, and in accordance with the novel aspects of the present invention, the mandrel 14 comprises an inner annular body 21 connected by webs 22 to an outer annular body 23 so as to provide openings 24 (see FIG. 2) therebetween connecting the annular space between casings 11 and 15 with the bore of the wellhead above the hanger. There are internal threads 21*a* on the lower end of the inner body 21 for connection with the casing 15 and the easy threads 20 previously described are formed on an external surface of an upwardly extending portion of the inner body. The outer body 23 has

an annular seating surface 23*a* extending continuously thereabout to provide a full circle of bearing upon the bowl 13. The upper end of this outer body also has a surface 25 providing a full circle of bearing area thereabout which is spaced below the upper end of the inner body 21 to support the seal and holddown assembly 26 between the inner body and bore 12 of the casing head and in a manner to be described more fully hereinafter.

The connecting webs 22 are of such size and the outer and inner peripheries of the inner and outer bodies 21 and 23, respectively, are of such diameter that the combined cross-sectional area of the openings 24 is at least approximately as large as the minimum cross-sectional area of the annular space between the casings 11 and 15. As can be seen from FIG. 1, this minimum area of the annular space is defined by the lower end 27 of inner mandrel body 21 as well as casing couplings 27*a* beneath the mandrel. Furthermore, the webs 22 are of substantially teardrop design in cross section, as shown in FIG. 3, and the inner diameter of the outer mandrel body 23 is at least substantially aligned with the lower portion of the casing head bore 12 and inner diameter of outer casing 11, so as to provide a minimum of resistance to flow through openings 24. In order to compensate for the slight restriction of the webs 22, the outer diameter of inner mandrel body 21 is reduced somewhat above its lower end 27.

When circulation through the landed mandrel has been completed, the seal and holddown assembly 26 is lowered onto the upper end of the mandrel by means of a running tool 28. When the assembly is fully made up with the hanger mandrel, it seals between the mandrel and the bore of the casing head to close the openings through the mandrel and holds such hanger mandrel downwardly upon the bowl 13 to resist the upward force due to excessive well pressure below it. The running tool 28 is then released from such assembly for removal upwardly through the bore of the wellhead.

As best shown in FIGS. 5 and 6, the assembly 26 includes a sleeve 29 having easy threads 29*a* about its lower inner end for connection to easy threads 20 on inner mandrel body 21. As previously mentioned, a ring 30 of resilient sealing material as well as a locking member 33 are carried about the sleeve beneath a flange 29*b* on the upper outer end of the sleeve. More particularly, the seal ring is carried above a junk ring 31 which is supported by a snap ring 32 removably disposed about the sleeve 29, and the locking member 33 is supported above an expander 34 supported on the upper end of seal ring 30.

The locking member 33 comprises slip means in the form of a ring 33*a* having teeth 33*c* on its outer surface and a conically shaped inner surface 33*b* for sliding downwardly and outwardly over a conical outer surface on expander 34 into gripping engagement with the bore 12 of the head. As shown in FIG. 4, the ring is longitudinally split from each end at 33*d* to permit it to be expanded and contracted as it moves vertically over the outer expander surface. In the normally contracted position of the slip ring (FIG. 5), its teeth 33*c* are spaced from the bore 12 of the head and substantially axially aligned with the outer diameters of expander 34, seal ring 30, and junk ring 31 so that the entire assembly may be moved freely within the bore.

The running tool 28 is of any conventional construction, such as the one shown in the drawings, wherein the assembly 26 is connected to the tool for vertical movement therewith by means of a series of spring-pressed balls 35 carried on the lower end of the tool to engage beneath an inwardly extending shoulder 29*c* on the sleeve 29. The rotation of the running tool is imparted to such sleeve by means of one or more radially extending pins 36 fitting within slots 37 on the upper inner end of the sleeve 28. Obviously then, the assembly is connected to the running tool 28 for vertical as well as rotational movement therewith merely upon forcing the lower end of the tool into

the upper end of the sleeve. Then, when the assembly 26 has been fully made up with the hanger, as shown in FIG. 6, the running tool can be removed merely upon upward movement with respect thereto. Of course, other suitable means may be provided for lowering, raising, making up, and breaking out the assembly with respect to the hanger mandrel.

As will be understood from FIGS. 5 and 6, as the sleeve 29 is initially made up with threads 20 on the inner mandrel body 21, the junk ring 31 beneath sealing member 30 will seat upon continuous annular surface 25 on the outer mandrel body so as to land the seal ring 30. Continued making up of the threads will then cause the sleeve 29 and its flange 29*b* to move downwardly with respect to the landed seal ring and the slip means 33 carried thereabove. As such flange bears upon the upper end of the ring 33, it forces it downwardly upon the conical surface of expander 34 and thus the expander downwardly against the supported seal ring 30. As shown in FIG. 6, this causes the seal ring to be deformed outwardly into sealing engagement between the outer periphery of the sleeve 29 and the bore 12 through the casing head, which in turn provides a firmer support against downward movement of expander 34, so that the slip means 33 slides downwardly and outwardly over the conical surface of the expander into gripping relation with the bore through the casing head. As shown in FIGS. 1, 5 and 6, there is an O-ring 38 or other suitable sealing means disposed about the inner periphery of the sleeve 29 for sealingly engaging between such sleeve and the outer periphery of the inner mandrel body 21 when the seal assembly 26 is fully made up with the mandrel.

From the foregoing it will be seen that this invention is one well adapted to attain all of the ends and objects hereinabove set forth, together with other advantages which are ovbious and which are inherent to the apparatus.

It will be understood that certain features and subcombinations are of utility and may be employed without reference to other features and subcombinations. This is contemplated by and is within the scope of the claims.

As many possible embodiments may be made of the invention without departing from the scope thereof, it is to be understood that all matter herein set forth or shown in the accompanying drawings is to be interpreted as illustrative and not in a limiting sense.

The invention having been described, what is claimed is:

1. Wellhead apparatus, comprising a head for connection to an outer casing and having a bore therethrough and a bowl within the bore, a mandrel seatable on the bowl to suspend an inner casing within the outer casing and define openings communicating the bore of said head above the hanger with the annular space between the inner and outer casings, and a seal and holddown assembly lowerable through the bore, including a sleeve having a flange on its upper end, a seal ring slidably carried about the sleeve and adapted to land upon said mandrel, a locking member carried above the seal ring and beneath the flange on the sleeve, and means for sealably and threadedly connecting the sleeve to the mandrel so that, upon landing of said seal ring, the flange forces the locking member downwardly to deform the seal ring into sealing engagement between the sleeve and bore to close said openings and move the locking member into locking engagement with respect to the bore for holding the mandrel down upon the bowl and the seal ring down upon the mandrel.

2. In underwater wellhead equipment where pressure control equipment is to be mounted above an outer well casing, a casing head mountable on the upper end of the outer casing below the pressure control equipment, a bore through the casing head aligned with the bore of the pressure control equipment, a seat in the bore within the casing head, a casing hanger supported on the seat for suspending an inner casing within the outer casing, means defining openings communicating the annular space between the inner and outer casings with the bore in the head above the casing hanger, a seal assembly closing said openings including a body having connector means thereon for anchoring said seal assembly against upward movement, said body having means thereon cooperable with a running tool extendible into the wellhead bore and manipulatable from the water level for lowering the body with the running tool and connecting said body within the bore of the casing head, said body having means on the inner and outer sides thereof for sealing engagement with the casing hanger and the wall of the bore within the casing head, respectively, the sealing means on at least one side of the body being normally retracted from such sealing engagement as the body of the seal assembly is lowered and partially telescoped over said casing hanger within the bore of the casing head, and means on the body operable upon said partial telescoping of the body and in response to further manipulation of said running tool for deforming the sealing means on the one side of the body into said sealing engagement.

3. In underwater wellhead equipment wherein pressure control equipment is to be mounted above an outer well casing, a casing head mountable on the upper end of the outer casing below the pressure control equipment, a bore through the casing head aligned with the bore of the pressure control equipment, a seat in the bore within the casing head, a casing hanger supported on the seat for suspending an inner casing within the outer casing, means defining openings for communicating the annular space between the inner and outer casings with the bore in the head above the casing hanger, a seal assembly closing said openings including a body, said body and said hanger having interengageable connector means, said body having means thereon cooperable with a running tool extendible into the wellhead bore and manipulatable from the water level for lowering the body onto and connecting it with said casing hanger, means on the inner and outer sides of the body for sealing engagement with the casing hanger and the wall of the bore within the casing head, respectively, the sealing means on the outer side of the body being normally retracted from sealing engagement with the bore as the body of the seal assembly is lowered and partially telescoped over said casing hanger, and means on the body operable upon said partial telescoping of the body over the casing hanger and in response to further manipulation of said running tool for deforming the sealing means on the outer side of the body into sealing engagement.

4. In underwater wellhead equipment wherein pressure control equipment is to be mounted above an outer well casing, a casing head mountable on the upper end of the outer casing below the pressure control equipment, a bore through the casing head aligned with the bore of the pressure control equipment, a seat in the bore within the casing head, a casing hanger supported on the seat for suspending an inner casing within the outer casing, means defining openings for communicating the annular space between the inner and outer casings with the bore in the head above the casing hanger, a seal assembly closing said openings including a body, said body and said hanger having interengageable connector means, said body having means thereon cooperable with a running tool extendible into the wellhead bore and manipulatable from the water level for lowering the body onto and connecting it with said casing hanger, means on the inner and outer sides of the body for sealing engagement with the casing hanger and the wall of the bore within the casing head, respectively, means on the outer side of the body for anchoring the seal assembly with respect to the wall of the casing head bore, the anchoring means and the sealing means on the outer side of the body being normally retracted from anchoring and sealing engagement with the wall of the bore within the casing head and the casing hanger, respectively, as the body of the seal assembly is lowered

and partially telescoped over the casing hanger, and means on the body operable upon said partial telescoping of the body over the casing hanger and in response to further manipulation of said running tool for deforming the anchoring means and the sealing means on the outer side of the body into said anchoring and sealing engagement, respectively.

5. In underwater wellhead equipment wherein pressure control equipment is to be mounted above an outer well casing, a casing head mountable on the upper end of the outer casing below the pressure control equipment, a bore through the casing head aligned with the bore of the pressure control equipment, a seat in the bore within the casing head, a casing hanger supported on the seat for suspending an inner casing within the outer casing, said casing hanger providing an upwardly extending portion defining an annular space between it and said bore within the casing head, said hanger having openings for communicating the annular space between the inner and outer casings with the annular space between said upwardly extending portion and the bore within the casing head, a seal assembly disposed within the last-mentioned annular space to close said openings, said seal assembly including a body, said body and said upwardly extending portion having interengageable connector means, said body having means thereon cooperable with a running tool extending into the wellhead bore and manipulatable from the water level for lowering the assembly into said annular space and connecting the body with said upwardly extending portion, means on the inner and outer sides of the body for sealing engagement with the upwardly extending portion and the wall of the bore within the casing head, respectively, the sealing means on the outer side of the body being normally retracted from such sealing engagement as the body of the seal assembly is lowered and partially telescoped over the casing hanger, and means on the body operable upon said partial telescoping of the body and in response to further manipulation of said running tool for deforming the sealing means on the outer side of the body into said sealing engagement.

6. For use in sealing off an annular space between wellhead conduits, wherein the inner of said conduits has threads about it and there is an upwardly facing seat within said space, an assembly comprising a body having means at its upper end for connection to a running tool to permit it to be lowered with said tool into said space and then rotated with respect to said conduits, means on the body for threadedly connecting it to the threads about the inner conduit upon rotation of the body by said running tool and sealing between the body and inner conduit when so connected, said body comprising separate parts which are vertically movable relative to each other, one such body part having a downwardly facing shoulder for landing on the seat as the body is rotated to partially threadedly connect it to the threads about the inner conduit, a seal ring supported on the one body part on the outer side of said body, and means on the other body part above the seal ring movable downwardly with respect to the shoulder on the one body part, upon further rotation of the body by said running tool, so as to deform the seal ring outwardly into sealing engagement with the wall of the outer conduit.

7. For use in sealing off an annular space between wellhead conduits, wherein the inner of said conduits has threads about it and there is an upwardly facing seat within said space, an assembly comprising a body having means at its upper end for connection to a running tool to permit it to be lowered with said tool into said space and then rotated with respect to said conduits, means on the body for threadedly connecting it to the threads about the inner conduit upon rotation of the body by said running tool and sealing between the body and the wall of the inner conduit when so connected, said body comprising separate parts which are vertically movable relative to each other, one such body part having a downwardly facing shoulder for landing on the seat as the body is rotated to partially threadedly connect it to the threads about the inner conduit, a seal ring and a locking member supported on the one body part on the outer side of the body, and means on the other body part above the seal ring movable downwardly with respect to the shoulder on the one body part, upon further rotation of the body by said running tool, so as to deform said seal ring and move said locking member outwardly into sealing and anchoring engagement, respectively, with the outer conduit.

8. Wellhead apparatus, comprising a casing head for connection to an outer casing, a bore within the head and an upwardly facing seat within the bore, a mandrel supported on said seat for suspending an inner casing within the outer casing, said mandrel having an upstanding inner portion, a seal assembly lowerable through the bore and including a sleeve sealably and threadedly connected about the inner mandrel portion, means providing a shoulder about the sleeve seating on the mandrel upon partial making up of the threaded connection, a seal ring carried about the outer side of the sleeve above the shoulder thereon, and means about the sleeve and above the seal ring and movable downwardly with respect to said shoulder upon seating of the shoulder so as to deform said seal ring into sealing engagement with the wall of said bore.

9. Wellhead apparatus, comprising a casing head for connection to an outer casing, a bore within the head and an upwardly facing seat within the bore, a mandrel supported on said seat for suspending an inner casing within the outer casing, said mandrel having an upstanding inner portion, a seal and hold-down assembly lowerable through the bore and including a sleeve sealably and threadedly connected about the inner mandrel portion, means providing a shoulder about the sleeve seating on the mandrel upon partial making up of the threaded connection, a seal ring and a locking member carried about the outer side of the sleeve above the shoulder thereon, and means about the sleeve and above the seal ring and locking member and movable downwardly with respect to said shoulder, upon seating of the shoulder, so as to deform the wall of the said seal ring and said locking member outwardly into sealing and locking engagement, respectively, with said bore.

10. In underwater wellhead equipment wherein an inner casing is lowered through the bore of pressure control equipment mounted above an outer casing and into said outer casing for suspension therewith, a casing head mountable on the upper end of the outer casing below the pressure control equipment, a bore through the head aligned with the bore of the pressure control equipment, a seat in the bore within the casing head, a casing hanger for suspending the inner casing within the outer casing, said hanger being seated on the seat and defining openings communicating the annular space between the inner and outer casings with the bore within the head above the casing hanger, a separate seal assembly for closing said openings including a body having means thereon connectible with a running tool extendible through the aligned bores for lowering said assembly through said bores and onto said casing hanger above said openings, means on the body cooperable with means on the casing hanger, upon manipulation of the running tool from the water level, for releasably connecting the body to the casing hanger when it has been so lowered, said body comprising separate longitudinally movable parts, one of said parts having a shoulder thereon for landing on the casing hanger when the body is releasably connected thereto and the other of said parts having the running tool connecting means thereon, seal means on the body for sealing between the casing hanger and the wall of the casing head bore to close said openings, said seal means including a seal ring on the outer side of the one body part which is normally retracted as the assembly is lowered into landed position, and means on the other body part for deforming said seal ring into sealing engagement with the wall of the

casing head bore upon further manipulation of said running tool.

References Cited by the Examiner

UNITED STATES PATENTS

1,654,463	12/27	Jaques	285—356
1,867,321	7/32	McEvoy	24—263
1,875,749	9/32	McEvoy	285—356
2,030,499	2/36	Church	24—263
2,104,808	1/38	Neuhaus	285—144
2,205,988	6/40	McEvoy	285—143
2,312,476	3/43	Penick	285—139
2,339,771	1/44	Davies	285—356
2,346,060	4/44	Yeatman	285—142
2,582,518	1/52	Works	285—96
2,998,269	8/61	Houghton	285—260

CARL W. TOMLIN, *Primary Examiner.*

THOMAS F. CALLAGHAN, *Examiner.*

UNITED STATES PATENT OFFICE
CERTIFICATE OF CORRECTION

Patent No. 3,179,448

April 20, 1965

Marvin R. Jones

It is hereby certified that error appears in the above numbered patent requiring correction and that the said Letters Patent should read as corrected below.

Column 2, line 42, for "engagement with respect to the bore in the head" read -- area for seating the holddown and seal assembly --; line 54, for "ngagement" read -- engagement --.

Signed and sealed this 14th day of September 1965.

(SEAL)
Attest:

ERNEST W. SWIDER
Attesting Officer

EDWARD J. BRENNER
Commissioner of Patents