(12) PATENT **(11)** Application No. **AU 199953509 B2**
(19) AUSTRALIAN PATENT OFFICE **(10)** Patent No. **744971**

(54) Title
Electrophotographic image forming apparatus, process cartridge, developing device and measuring part

(51)[7] International Patent Classification(s)
G03G 021/18

(21) Application No: **199953509** (22) Application Date: **1999.10.07**

(30) Priority Data

(31) Number	(32) Date	(33) Country
10-303344	**1998.10.09**	**JP**

(43) Publication Date : **2000.04.13**
(43) Publication Journal Date : **2000.04.13**
(44) Accepted Journal Date : **2002.03.07**

(71) Applicant(s)
Canon Kabushiki Kaisha

(72) Inventor(s)
Toshiyuki Karakama; Shirou Sakata; Hideki Matsumoto; Akiyoshi Yokoi

(74) Agent/Attorney
SPRUSON and FERGUSON,GPO Box 3898,SYDNEY NSW 2001

(56) Related Art
US 4592645
US 4786869
US 5198860

ELECTROPHOTOGRAPHIC IMAGE FORMING APPARATUS, PROCESS CARTRIDGE, DEVELOPING DEVICE AND MEASURING PART

ABSTRACT OF THE DISCLOSURE

A process cartridge (B) detachably mountable to an electrophotographic image forming apparatus, said process cartridge (B) includes (a) an electrophotographic photosensitive member (7); (b) process means (4) actable on the electrophotographic photosensitive member (7); (c) a measuring electrode member (20A) having input side and output side electrodes (23,24) having at least one juxtaposed portions, the measuring electrode member (20A) being disposed at such a position that it is contacted to a developer; (d) a reference electrode member (20B) having input side and output side electrodes (23,24) having at least one juxtaposed portions, the reference electrode member (20B) being disposed at such a position that it is out of contact to the developer; (e) an output contact (30C) for the measuring electrode member (20A), connected electrically to the output side electrode (24) of the measuring electrode member (20A); (f) an output contact for the reference electrode member (20B), connected electrically to the output side electrode (24) of the reference electrode member (20B); and (g) a common input contact connected electrically to the input side electrodes (23) of the measuring electrode member (20A) and the reference electrode member.

S & F Ref: 481519

AUSTRALIA

PATENTS ACT 1990

COMPLETE SPECIFICATION

FOR A STANDARD PATENT

ORIGINAL

Name and Address of Applicant: Canon Kabushiki Kaisha
30-2, Shimomaruko 3-chome
Ohta-ku
Tokyo 146
JAPAN

Actual Inventor(s): Toshiyuki Karakama, Shirou Sakata, Hideki Matsumoto, Akiyoshi Yokoi

Address for Service: Spruson & Ferguson, Patent Attorneys
Level 33 St Martins Tower, 31 Market Street
Sydney, New South Wales, 2000, Australia

Invention Title: Electrophotographic Image Forming Apparatus, Process Cartridge, Developing Device and Measuring Part

The following statement is a full description of this invention, including the best method of performing it known to me/us:-

ELECTROPHOTOGRAPHIC IMAGE FORMING APPARATUS, PROCESS CARTRIDGE, DEVELOPING DEVICE AND MEASURING PART

FIELD OF THE INVENTION AND RELATED ART:

The present invention relates to an electrophotographic image forming apparatus, a process cartridge, a developing device and a measuring part.

Here, the electrophotographic image forming apparatus includes an electrophotographic copying machine, an electrophotographic printer, for example, a, LED printer or laser beam printer, an electrophotographic printer type facsimile, an electrophotographic printer type word or the like.

The process cartridge is a cartridge containing as a unit an electrophotographic photosensitive member and at least one process means which is a charging means, a developing means or cleaning means, or a cartridge containing as a unit an electrophotographic photosensitive member and at least developing means as process means, said process cartridge being detachably mountable to a main assembly of an electrophotographic image forming apparatus.

Heretofore, a process cartridge including is used in an image forming apparatus using an electrophotographic image forming process, widely used

is a process cartridge which contains as a unit an electrophotographic photosensitive member and process means actable on the electrophotographic photosensitive member, which cartridge is detachably mountable to the main assembly of the electrophotographic image forming apparatus. Such process cartridge is advantageous in that maintenance operation can be carried out in effect by the users. Therefore, the process cartridge type is widely used in electrophotographic image forming apparatus.

With such an electrophotographic image forming apparatus of a process cartridge type, the user is supposed to exchange the process cartridge, and therefore, it is desirable that there is provided means by which the user is notified of the consumption of the developer.

Heretofore, it is known that two electrode rods are provided in the developer container of the developing means, and the change of the electrostatic capacity between the electrode rods is detected to provide the amount of the developer.

Japanese Laid-open Patent Application No. HEI- 5-100571 discloses a developer detection electrode member comprising two parallel electrodes disposed on the same surface with a predetermined gap, in place of the two electrode rods, wherein the developer detection electrode member is placed on the

lower surface of the developer container. It detects the developer remainder by detecting the change of the electrostatic capacity between the parallel electrodes disposed on a surface.

SUMMARY OF THE INVENTION

According to a first aspect of the invention there is provided a process cartridge detachably mountable to an electrophotographic image forming apparatus, said process cartridge comprising:

(a) an electrophotographic photosensitive member;

(b) process means actable on said electrophotographic photosensitive member;

(c) a measuring electrode member having input side and output side electrodes having at least one juxtaposed portion, said measuring electrode member being disposed at such a position that it is contacted to a developer;

(d) a reference electrode member having input side and output side electrodes having at least one juxtaposed portion, said reference electrode member being disposed at such a position that it is out of contact with the developer;

(e) an output contact for said measuring electrode member, connected electrically to said output side electrode of said measuring electrode member;

(f) an output contact for said reference electrode member, connected electrically to said output side electrode of said reference electrode member; and

(g) a common input contact connected electrically to said input side electrodes of said measuring electrode member and said reference electrode member.

AUSTRALIAN PATENT OFFICE

According to a second aspect of the invention there is provided an electrophotographic image forming apparatus for forming an image on a recording material, to which apparatus a process cartridge is detachably mountable, comprising:

(a) mounting means for detachably mounting the process cartridge to the main assembly of the electrophotographic image forming apparatus, the process cartridge including:

an electrophotographic photosensitive member;

process means actable on said electrophotographic photosensitive member;

a measuring electrode member having input side and output side electrodes having at least one juxtaposed portion, said measuring electrode member being disposed at such a position that it is contacted to a developer;

a reference electrode member having input side and output side electrodes having at least one juxtaposed portion, said reference electrode member being disposed at such a position that it is out of contact with the developer;

an output contact for said measuring electrode member, connected electrically to said output side electrode of said measuring electrode member;

an output contact for said reference electrode member, connected electrically to said output side electrode of said reference electrode member; and

a common input contact connected electrically to said input side electrodes of said measuring electrode member and said reference electrode member;

(b) display means for displaying an amount of the developer determined on the basis of outputs from said output contact for said measuring electrode member and said output contact for said reference electrode member; and

(c) feeding means for feeding said recording material.

AUSTRALIAN PATENT OFFICE

According to a third aspect of the invention there is provided a developing device for being provided in a main assembly of an electrophotographic image forming apparatus comprising:

(a) a developer accommodating portion for accommodating a developer to be used for developing an electrostatic latent image formed on an electrophotographic photosensitive member;

(b) developing means for developing an electrostatic latent image with the developer accommodated in said developer accommodating portion;

(c) a measuring electrode member having input side and output side electrodes having at least one juxtaposed portion, said measuring electrode member being disposed at such a position that it is contacted to the developer;

(d) a reference electrode member having input side and output side electrodes having at least one juxtaposed portion, said reference electrode member being disposed at such a position that it is out of contact with the developer;

(e) an output contact for said measuring electrode member, connected electrically to said output side electrode of said measuring electrode member;

(f) an output contact for said reference electrode member, connected electrically to said output side electrode of said reference electrode member; and

(g) a common input contact connected electrically to said input side electrodes of said measuring electrode member and said reference electrode member.

According to a fourth aspect of the invention there is provided an electrophotographic image forming apparatus for forming an image on a recording material, said electrophotographic image forming apparatus comprising:

an electrophotographic photosensitive member;

AUSTRALIAN PATENT OFFICE

developing means for developing with a developer an electrostatic latent image formed on said electrophotographic photosensitive member;

a measuring electrode member having input side and output side electrodes having at least one juxtaposed portion, said measuring electrode member being disposed at such a position that it is contacted to the developer;

a reference electrode member having input side and output side electrodes having at least one juxtaposed portion, said reference electrode member being disposed at such a position that it is out of contact with the developer;

an output contact for said measuring electrode member, connected electrically to said output side electrode of said measuring electrode member;

an output contact for said reference electrode member, connected electrically to said output side electrode of said reference electrode member; and

a common input contact connected electrically to said input side electrodes of said measuring electrode member and said reference electrode member;

display means for displaying an amount of the developer determined on the basis of outputs from said output contact for said measuring electrode member and said output contact for said reference electrode member; and

electrostatic latent image forming means for forming the electrostatic latent image on said electrophotographic photosensitive member.

According to a further aspect of the invention there is provided a measuring part for detecting an amount of a developer, comprising:

(a) a measuring electrode member having input side and output side electrodes having at least one juxtaposed portion, said measuring electrode member being disposed at such a position that it is contacted to the developer;

AUSTRALIAN PATENT OFFICE

(b) a reference electrode member having input side and output side electrodes having at least one juxtaposed portion, said reference electrode member being disposed at such a position that it is out of contact with the developer;

(c) an output contact for said measuring electrode member, connected electrically to said output side electrode of said measuring electrode member;

(d) an output contact for said reference electrode member, connected electrically to said output side electrode of said reference electrode member; and

(e) a common input contact connected electrically to said input side electrodes of said measuring electrode member and said reference electrode member.

According to a further aspect of the invention there is provided a process cartridge detachably mountable to a main assembly of an electrophotographic image forming apparatus, said process cartridge comprising:

(a) an electrophotographic photosensitive member;

(b) a developing roller for developing a latent image formed on said electrophotographic photosensitive member;

(c) a measuring electrode member having input-side and output-side electrodes, said measuring electrode member being disposed at such a position that it is contacted to a developer accommodated in said process cartridge;

(d) a reference electrode member having input-side and output-side electrodes, said reference electrode member being disposed at such a position that it is out of contact with the developer accommodated in said process cartridge;

(e) an output contact for said measuring electrode member, connected electrically to said output side electrode of said measuring electrode member;

(f) an output contact for said reference electrode member, connected electrically to said output-side electrode of said reference electrode member; and

AUSTRALIAN PATENT OFFICE

(g) a common input contact connected electrically to said input side electrodes of said measuring electrode member and said reference electrode member, wherein said output contact for said measuring electrode member, said output contact for said reference electrode member and said common input contact are provided exposed on said cartridge frame, and an amount of the developer in said process cartridge is capable of being detected by said main assembly using outputs, corresponding to electrostatic capacities from said output contact for said measuring electrode member and from said output contact for said reference electrode member.

These and other objects, features and advantages of the present invention will become more apparent upon a consideration of the following description of the preferred embodiments of the present invention taken in conjunction with the accompanying drawings.

BRIEF DESCRIPTION OF DRAWINGS

Figure 1 shows a general arrangement of an electrophotographic image forming apparatus according

AUSTRALIAN PATENT OFFICE

to an embodiment of the present invention.

Figure 2 is the perspective view of an outer appearance of an electrophotographic image forming apparatus according to an embodiment of the present invention.

Figure 3 is a longitudinal sectional view of a process cartridge according to an embodiment of the present invention.

Figure 4 is a perspective view of an outer appearance of a process cartridge according to an embodiment of the present invention, as seen from the bottom.

Figure 5 is the perspective view of an outer appearance illustrating a mounting portion of a main assembly of an apparatus for mounting a process cartridge.

Figure 6 is a perspective view of a developer container illustrating a description for a detecting device of an amount.

Figure 7 is front views of a measuring electrode member and a reference electrode member according to an embodiment of the present invention.

Figure 8 is front views of a measuring electrode member and a reference electrode member according to another embodiment of the present invention.

Figure 9 is a graph explaining a detection

principle of an amount of a developer.

Figure 10 is a graph explaining a detection principle for an amount of the developer according to an embodiment of the present invention.

Figure 11 shows a detecting circuit for an amount of the developer for detecting device for the amount of the developer according to an embodiment of the present invention.

Figure 12 is an illustration of arrangement of a measuring electrode member and a reference electrode member.

Figure 13 is a perspective view of a developer container having a developer amount detecting device according to an embodiment of the present invention.

Figure 14 is similar to Figure 13, and is a perspective view of a developer container illustrating a developer container having a reference electrode member therein.

Figure 15 is an illustration of connection of contacts of a measuring electrode member and a reference electrode member.

Figure 16 is an illustration of 3 contacts provided in a process cartridge.

Figure 17 is an illustration of display of an amount of the developer according to an embodiment of the present dimension.

Figure 18 shows a further example of display of an amount of the developer according to an embodiment of the present invention.

Figure 19 shows a further example of display of an amount of the developer according to an embodiment of the present invention.

DESCRIPTION OF THE PREFERRED EMBODIMENTS

Referring to the accompanying drawings, the description will be made as to a process cartridge and an electrophotographic image forming apparatus according to embodiments of the present invention.

Referring to Figures 1-3, the description will be made as to an electrophotographic image forming apparatus to which a process cartridge is a detachably mountable, according to one embodiment of the present invention. In this embodiment, the electrophotographic image forming apparatus is in the form of a laser beam printer A of an electrophotographic type in which images are formed on a recording material such as recording paper, an OHP sheet or textile through an electrophotographic image forming process.

The laser beam printer A comprises an electrophotographic photosensitive member, that is, a photosensitive drum 7. The photosensitive drum 7 is electrically charged by a charging roller 8 (charging

means), and is exposed to a laser beam modulated in accordance with image information coming from optical means 1 including a laser diode 1a, a polygonal mirror 1b, a lens 1c and a reflection mirror 1d, so that latent image is formed on the photosensitive drum in accordance with the image information. The latent image is developed by developing means 9 into a visualized image, that is, toner image.

The developing means 9 includes a developer chamber 9A provided with a developing roller 9a (developer carrying member), wherein the developer in developer container 11A (developer accommodating portion) disposed adjacent to the developer chamber 9A is fed out to a developing roller 9a in the developer chamber 9A by rotation of a developer feeding member 9b. The developer chamber 9A is provided with a developer stirring member 9e adjacent to the developing roller 9a to circulate the developer in the developer chamber. The developing roller 9a contains therein a fixed magnet 9c so that developer is fed by rotation of the developing roller 9a, and the developer is electrically charged by triboelectric charge by the friction with a developing blade 9d, and is formed into a developer layer having a predetermined thickness, which layer is supplied to a developing zone of the photosensitive drum 7. The developer the supplied to the developing zone is

transferred onto the latent image on the photosensitive drum 7 so that toner image is formed. The developing roller 9a is electrically connected with a developing bias circuit which is normally supplied with a developing bias voltage in the form of an AC voltage biased with a DC voltage.

On the other hand, a recording material 2 in a sheet feeding cassette 3a is fed out and supplied to an image transfer position by a pick-up roller 3b, a pair of feeding rollers 3c, 3d, a pair of registration rollers, in timed relation with the formation of the toner image. In the transfer position, there is provided a transfer roller 4 (transferring means), which functions to transfer the toner image onto the recording material 2 from the photosensitive drum 7 by being supplied with a voltage.

The recording material 2 now having the toner image transferred thereonto is fed to fixing means 5 along a feeding guide 3f. The fixing means 5 includes driving roller 5c and a fixing roller 5b containing therein a heater 5a to apply pressure and heat to the recording material 2 passing therethrough to fix the toner image on the recording material 2.

The recording material is then fed by pairs of discharging rollers 3g, 3h, 3i and is discharged to a discharging tray 6 along a reverse path 3j. The discharging tray 6 is provided on a top side of the

main assembly 14 of the apparatus, that is, a laser beam printer A. A deflectable flapper 3K is usable to discharge the recording material 2 by a pair of discharging rollers without using the reversing passage 3j. In this embodiment, the 3g, 3h, 3i, the pair of feeding rollers 3c, 3d, the pair of registration rollers, the feeding guide 3f, the pair of discharging rollers and the pair of discharging rollers 3m, constitute sheet feeding means.

The photosensitive drum 7 after the transfer roller 4 transfers the toner image onto the recording material 2, is cleaned by cleaning means 10 so that developer remaining on the photosensitive drum 7 is removed so as to be prepared for the next image forming process operation. The cleaning means 10 scrapes the remaining developer off the photosensitive drum 7 by an elastic cleaning blade provided contacted to the photosensitive drum 7, and collect it to a residual developer container 10b.

In this embodiment, a process cartridge B includes a developing unit comprising a developer frame 11 including the developer container developer 11A accommodating the developer and the developer feeding member 9b, and a developing device frame 12 supporting the developing means 9 such as the developing roller 9a and the developing blade 9d, and the process cartridge B further includes a cleaning

frame 13 supporting the photosensitive drum 7, the cleaning means 10 such as the cleaning blade 10a and the charging roller 8.

The process cartridge B is detachably mounted to cartridge mounting means of the main assembly 14 of the image forming apparatus by the user. In this embodiment, the cartridge mounting means comprises guide means 13R (13L) on the outer surface of the process cartridge B and guide portions 16R (16L) of the main assembly 14 of the apparatus for guiding the guide means 13R (13L), as shown in Figures 4 and 5.

According to the embodiment of the present invention, the process cartridge B is provided with a developer amount detecting device for detecting substantially real-time the remaining amount of the developer when the developer in the developer container 11A is consumed.

As shown in Figure 6, the developer amount detecting device comprises a measuring electrode member 20A for detecting the amount of the developer, and a reference electrode member 20B for generating a reference signal on the basis of detection of the temperature and humidity of the ambiance.

The measuring electrode member 20A is provided on an inside surface of the developer container 11A of the developing means 9 as shown in Figure 6, or on such a portion in the developer

container 11A that it is contacted to the developer and that contact area thereof with the developer changes with reduction of the developer, such as a bottom portion. As shown in Figures 13 and 14, the reference electrode member 20B may be disposed at such position in the developer container as is the same side as the measuring electrode member 20A and is separated by a partition wall 21 so as not to be in contact with the developer.

As shown in Figure 7, the measuring electrode member 20A comprises a pair of electroconductive portions (input side electrode 23 and an output side electrode 24) which are extended in parallel with each other with a predetermined gap on the substrate 22. In this embodiment, the electrodes 23, 24have at least one pair of electrode portions 23a-23f, 24a-24f juxtaposed in parallel with a predetermined gap G, and the electrode portion 23a-23f, 24a-24f are connected to the connecting electrode portions 23g, 24g, respectively. Thus, the two electrodes 23and 24 have a comb-like configuration with the branch portions interlaced with each other. However, the electrode pattern of the measuring electrode member 20 is not limited to those examples, and for example, as shown in Figure 8, the electrodes 23, 24 may be extended in the volute pattern with constant gap.

The measuring electrode member 20A detects

the remaining amount of the developer (the developer remainder) in the developer container 11A by detecting the electrostatic capacity between the parallel electrodes 23, 24. Since the developer has a dielectric constant which is larger than that of the air, and therefore, the contact of the developer on the surface of the measuring electrode member 20A increases the electrostatic capacity between the electrodes 23, 24.

Therefore, according to this embodiment, the measuring electrode member 20A can detect the developer in the developer container 11A on the basis of the area of the developer contacted to the surface of the measuring electrode member 20A, using a predetermined calibration curve, irrespective of the cross-sectional configuration of the developer container 11A or the configuration of the measuring electrode member 20A.

The electrode patterns 23, 24of the measuring electrode member 20A can be provided by, for example, forming electroconductive metal patterns 23, 24of copper or the like through etching or printing on a hard print board 22 such as paper phenol, glass epoxy resin or the like having a thickness of 0.4-1.6mm or on a flexible printed board 22 of polyester, polyimide or the like resin material having a thickness of 0.1 mm. That is, they can be manufactured through the same

in manufacturing method as with ordinary printed boards and wiring patterns. Therefore, the complicated electrode pattern as shown in Figures 7 and 8 can be easily manufactured at the same cost as with simple patterns.

When a complicated pattern shown in Figure 7 or 8 is used, the length along which the electrodes 23, 24are opposed to each other can be increased, and in addition, by using a pattern forming method such as etching, the gap between the electrodes 23, 24can be reduced to several tens μm approx., so that large electrostatic capacity can be provided. The detection can be enhanced by increasing the amount of change of the electrostatic capacity. More particularly, the electrodes 23, 24have a width of 0.1-0.5mm, and a thickness of 17.5-70μm with the gap G therebetween of 0.1-0.5mm. The surface on which the metal pattern is formed can be laminated with thin resin film having a thickness of 12.5-125μm for example.

As described in the foregoing, according to the detecting device for the amount of the developer according to the present invention, the measuring electrode member 20A is disposed on the inner surface of the developer container 11A or on such an inner bottom surface that contact area with a developer reduces with consumption of the developer, and the total amount of the developer in the developer

container can be detected by the change of the electrostatic capacity of the measuring electrode member 20A, which change is indicative of the change of the contact area with the developer.

Since the dielectric constant of the developer is larger than that of the air, the electrostatic capacity is larger at the portion where the developer is contacted to the measuring electrode member 20A (where the developer exists) than at the portion where no developer is contacted thereto (where the developer does not exist). Therefore, the amount of the developer in the developer container 11A can be detected by detecting the change of the electrostatic capacity.

According to the present invention, the developer remainder detecting device, as shown in Figure 6, further comprises the reference electrode member 20B having the similar structure as the measuring electrode member 20A.

The reference electrode member 20B has the same structure as the measurement electrode member 20A. More particularly, as shown in Figure 7, it comprises a pair of electrodes (input side electrodes 23(23a-23f) and output side electrodes 24 (24a-24f)) formed parallel with a gap G on the substrate 22, and the two electrodes 23, 24 may be interlaced, or it may be in the form of a volute, as shown in Figure 8. The

reference electrode member 20B can be manufactured through the same manufacturing process as with the printed boards and the wiring patterns. According to this embodiment, the electrostatic capacity of the reference electrode member 20B changes in accordance with the ambient condition such as the temperature and the humidity as described hereinbefore, so that it functions as a calibration member (reference electrode or member) for the measuring electrode member 20A.

Thus, according to the detecting device for the amount of the developer of this embodiment, the output of the measuring electrode member 20A is compared with the output of the reference electrode member 20B which is influenced by the change of the ambient conditions. For example, the electrostatic capacity of the reference electrode member 20B in a predetermined state is set to be the same as the electrostatic capacity of the measuring electrode member 20A when no developer exists, and then, the difference of the outputs of the reference electrode member 20B and the measuring electrode member 20A is indicative of the change of the electrostatic capacity caused by the presence of the developer, so that accuracy of the detection of the remaining amount of the developer can be enhanced.

The description will be made in more detail as to the detection principle of the amount of the

developer. The measuring electrode member 20A detects the electrostatic capacity of the contact portion of the surface of the pattern to estimate the amount of the developer in the developer container 11A, and therefore, the output is influenced by the change of the ambiance (humidity, temperature or the like).

For example, when the humidity is high, which means that content of the moisture in the air is high, with the result that dielectric constant of the atmospheric air contacted to the detecting member 20A is high. Therefore, even when the amount of the developer is the same, the output of the measuring electrode member 20A changes if the ambient condition changes. Additionally, if the material of the substrate 22 constituting the pattern absorbs moisture, the dielectric constant changes with the result, in effect, of the ambient conditions change.

By the use of the reference electrode member 20B, as the calibration element, which exhibits the same change as the measuring electrode member 20A in accordance with the ambient condition change, that is by the use of the reference electrode member 20B having the same structure as the measuring electrode member 20A but not contacted to the developer, the reference electrode member 20B being placed under the same condition as the measuring electrode member 20A, the developer remainder can be detected without the

influence of the ambient condition variation when the difference of the outputs of the measuring electrode member 20A and the reference electrode member 20B used for the detection.

As shown in the bar graph of Figure 9, at the leftmost part, the electrostatic capacity determined by the measuring electrode member 20A for detecting the amount of the developer, indicative of the variation of the developer contacted to the surface of the detecting member plus the variation of the ambient condition. If the same is placed to under the high temperature and high humidity ambience, the electrostatic capacity increases despite the fact that amount of the developer is the same, since the electrostatic capacity increases corresponding to the ambient condition change, as indicated at the leftmost part in Figure 16.

As shown in the middle parts of Figures 9 and 10, the reference electrode member (calibration electrode) 20B exhibiting the same response to the ambient condition variation as the measuring electrode member (detecting member) 20A, is used, and the difference therebetween (right side of the graph) is taken, by which the electrostatic capacity indicative of the amount of the developer only, can be provided.

Referring to Figure 11, the detecting device for the amount of the developer embodying the above

described principle will be described. Figure 11 shows an example of a circuit for developer detection, more particularly, the connection between the measuring electrode member 20A and the reference electrode member 20B in the image forming apparatus.

The measuring electrode member 20A, as the detecting member having an electrostatic capacity Ca which changes in accordance with the amount of the developer, and the reference electrode member 20B, as a calibration the electrode having the electrostatic capacity Cb which changes in accordance with the ambient condition, are connected as indicated; more particularly, the input side electrodes 23is connected to the developing bias circuit 101 (developing bias applying means) by way of a contact 30C (main assembly side contact 32C), and the output side electrode 24 is connected to the control circuit 102 of developer amount detecting circuit 100 by way of contacts 30A (a main assembly side contact 32A) and 30B (main assembly side contact 32B). The reference electrode member 20B uses an AC (alternating) current I_1 supplied through a developing bias circuit 101, and a reference voltage V1 for detecting the developer remainder is set.

The control circuit 102, as shown in Figure 11, adds, to the voltage V3 set by the resistances R3, R4, the voltage drop V2 determined by the resistance

R2 and the AC current I_1 'which is the current branched by a volume VR1 from the AC current I_1 supplied to the reference electrode member 20B, that is, an impedance element.

The AC (alternating) current I_2 applied to the measuring electrode member 20A is inputted to the amplifier, and is outputted as the detected value V4 ($V1-I_2 x$ R5) indicative of the developer remainder. The voltage output is the detected value indicative of the developer remainder.

As described in the foregoing, according to the developer amount detecting device of this embodiment, the use is made with the reference electrode member 20B (calibration element) exhibiting the same capacity change in accordance with the ambient condition change as the measuring electrode member 20A, so that detection error due to the variation of the ambient condition can be canceled or compensated so that high accuracy of the detection for the developer remainder can be accomplished.

According to this embodiment, the reference electrode member 20B as the calibration member and the measuring electrode member 20A have the same structure and disposed in the developer container 11A, as shown in Figures 12-14. With this structure, the developer container is provided both with the measuring electrode member 20A and the reference electrode

member 20B, so that variation due to the ambience can be removed or canceled, and since the measuring electrode member 20A and the reference electrode member can be placed under the substantially same ambient conditions, the detection accuracy can be enhanced.

Furthermore, according to this embodiment, as shown in Figures 11 and 12, the process cartridge B is provided with three contacts, namely, an input side contact 30C, which is common for the detection and the comparison, detection and comparison output contacts 30A and 30B. With such a structure, the number of contacts can be reduced. Additionally, by using a common contacts for the input, the input pulse can be made identical, so that accuracy is enhanced.

According to this embodiment, as will be understood from Figures 13 and 14, the electrodes 23, 24 of the measuring electrode member 20A and the reference electrode member 20B are formed on one side of one bendable substrate 22 such as a flexible printed board, and is folded when it is mounted to the developer container. In this embodiment, the measuring electrode member 20A and the reference electrode member 20B have the same electrode pattern. Therefore, the patterns of the electrodes 23, 24 of the measuring electrode member 20A and the reference electrode member 20B provide substantially the same

electrostatic capacities, and the width, the length, the clearance and the opposing areas are substantially the same. The reference electrode member 20B thus manufactured is folded back substantially at the center of the substrate, and it is disposed at such a position in the developer container 11A containing the measuring electrode member that it is partitioned by a partition wall 21 and it is not contacted to the developer.

The measuring electrode member 20A and the reference electrode member 20B are manufactured in the similar manner as with the normal manufacturing step of the printed boards, and therefore, there are variations in the electrostatic capacities of the substrates due to the variations in the width, the height of the electrode pattern, resulting from the variation of the moisture absorbed rate and/or the dielectric constant of the equipment or material, and/or the etching conditions. According to this embodiment, the measuring electrode member 20A and the reference electrode member 20B are formed on the same side of the substrate, so that single substrate is both for the detecting member and the calibration member, and therefore, the cost can be saved. Additionally, the electrode pattern are formed on the same material, the variations attributable to the differences of the natures of the base material can be

minimized. Moreover, since the patterns are formed on the same side of the base material, the variations during the pattern formation, such as during the etching, can be suppressed. Furthermore, with such a structure, the detection pattern can be provided toward the top of the developer container, so that detection of the developer is possible even if the developer container is full to the top. According to this embodiment, as shown in Figure 13, from the substrate 22 on which the measuring electrode member 20A and the reference electrode member 20B are formed, there are projected the output contact 31A for the measuring electrode connected electrically with the output side electrode 24 of the measuring electrode member 20A, the output contact 31B for the reference electrode connected electrically with the output side electrode 24 of the reference electrode member 20B, and the common input contact 31C connected with the input side electrodes 23 of the measuring electrode member 20A and the reference electrode member 20B.

These three contacts 31A, 31B, 31C, are fixed to a front wall portion 11a of the developer frame 11 bridging the weld portion relative to the developing device frame 12 Figure 16) of the developer container 11A as shown in Figure 15; and the three contacts 31A, 31B, 31C are exposed outwardly from the contact port 12c formed in the side member 12b fixed to the side of

the developing device frame 12, as shown in Figures 16 and 4 and are connected electrically to the output contact 30A of the measuring electrode and to the output contact 30B of the common input contact 30C mounted to the side member 12b. As shown in Figure 5, the contacts 30A, 30B, 30C of the process cartridge are electrically connected to the contacts 32A, 32B, 32C in the main assembly 14 of the apparatus when the process cartridge B is mounted to the main assembly 14 of the apparatus, and therefore, the measuring electrode member 20A and the reference electrode member 20B provided in the process cartridge B are connected to the developer amount measuring circuit 100 shown in Figure 11.

In the foregoing description of the embodiment, the patterns of the electrodes 23, 24 of the reference electrode member 20B and the measuring electrode member 20A have substantially the same electrostatic capacities, pattern widths, lengths, clearances and opposing areas. However, the areas of the electrode patterns 23, 24 of the reference electrode member 20B for calibration may be different from that of the electrode patterns 23, 24 of the measuring electrode member 20A. In this case, the output of the reference electrode member 20B is multiplied by a predetermined coefficient, and the multiplied output is compared with the output of the

measuring electrode member 20A. Using such a structure, the size of the reference electrode member 20B can be reduced so that space occupied by the detecting member can be reduced. The members 20A and 20B may be placed on the same wall of the developer container 11A at the same side, and the reference electrode member 20B is prohibited from contacting to the developer, and in this case, it is possible to increase the percentage of the pattern area of the detecting member 20A in the limited the area, therefore, the amount of the change of the electrostatic capacity and the detection accuracy can be enhanced.

In the foregoing, the same configurations or same dimensions do not mean exactly identical configuration or dimensions, and do not exclude those having a difference due to manufacturing errors or the like as long as the detection can be made with practical accuracy.

As described in the foregoing, according to this embodiment, the developer container 11A is provided with the measuring electrode member 20A and the reference electrode member 20B for substantially real-time detection of the developer remainder, further preferably, the developer chamber 9A of the developing means 9 is provided with an antenna rod, that is, an electrode rod 9h Figure 3 is extended by a

predetermined length in the longitudinal direction of the developing roller 9a with a predetermined clearance from the developing roller 9a. With this structure, the emptiness of the developer in the developer container can be detected by detecting the change of the electrostatic capacity between the developing roller 9a and the electrode rod 9h.

According to the image forming apparatus of this embodiment, the amount of the developer in the developer container 11A can be detected substantially real-time, and on the basis of the detection, the consumption amount of the developer may be displayed so as to promote the user to prepare the replenishing cartridge and further to supply the developer upon the display of the emptiness.

The description will be made as to the manner of display of the amount of the developer. The detected information provided by the developer amount detecting device is displayed on the screen of the terminal equipment such as a personal computer of the user in the manner, shown in Figures 17 and 18. In Figures 17 and 18, an indicator 41 moves in accordance with the amount of the developer so that user is aware of the amount of the developer.

Figure 19 shows an alternative, wherein the main assembly of the electrophotographic image forming apparatus is provided with a display portion of, LED

AUSTRALIAN PATENT OFFICE

(43) or the like, which is lit on or off, in accordance with the amount of the developer.

According to an aspect of the present invention, said measuring electrode member is disposed in a developer accommodating portion for accommodating the developer to be used for development of an electrostatic latent image by developing means as said process means, and the position of said measuring electrode member is such that it is contacted to the developer in said developer accommodating portion, and the position of said reference electrode member is such that it is out of contact to the developer in said developer accommodating portion.

According to another aspect of the present invention, said measuring electrode member and said reference electrode member are manufactured by forming electrode patterns on the same side of one substrate, and preferably said measuring electrode member and said reference electrode member generate substantially the same electrostatic capacity when a voltage is applied thereto. According to a further aspect of the present invention, a length of an opposed portion of said juxtaposed portions and a gap therebetween in said measuring electrode member are substantially the same as those of said reference electrode member, respectively.

According to a further aspect of the present

invention, said developing means has an electrode rod for detecting substantial absence of the developer.

As described in the foregoing, the present invention provides the following advantages:

(1) the remaining amount of the developer in the developer accommodating portion can be detected substantially real-time in accordance with consumption of the developer:

(2) the detection in (1) can be effected with minimum measurement error which may otherwise results due to the change of the ambient conditions.

(3) the number of parts of the contact portions can be reduced, and therefore, the manufacturing cost can be reduced.

(4) the assembling operativity of the developing device and/or the process cartridge can be improved.

In the foregoing embodiments, the range of substantially real-time detection of the remaining amount of the developer is not limited to the full range, that is, the range of 100% (Full) -0% (Empty). The substantially real-time detection range may be properly determined by one skilled in the art, for example, the range of, 100%-25%, or, 30%-0%, or the like. The remaining amount of 0% does not necessarily mean that there exists no developer at all. The remaining amount of 0% may be indicative of the event

that developer has decreased to such an extent that predetermined image quality is not provided.

As described, the present invention can accomplish the detection of the amount of the developer substantially real-time. Furthermore, the present invention can reduce the number of parts.

While the invention has been described with reference to the structures disclosed herein, it is not confirmed to the details set forth and this application is intended to cover such modifications or changes as may come within the purpose of the improvements or the scope of the following claims.

Accordingly, it is a principle advantage of the foregoing to provide an electrophotographic image forming apparatus, a process cartridge, a developing device and a developer in which a remaining amount of the developer can be detected substantially real-time.

It is another advantage of the foregoing to provide an electrophotographic image forming apparatus, a process cartridge and a developing device wherein a remaining amount of developer in a developer accommodating portion can be detected substantially real-time with consumption of the developer.

It a further advantage of the foregoing to provide an electrophotographic image forming apparatus, a process cartridge and a developing device wherein a remaining amount of the developer is detected by an electrostatic capacity between electrodes, and a measurement error attributable to a change of the ambience is compensated, so that detection error is minimized. It is a further advantage of the foregoing to provide a measuring part for detecting an amount of the developer substantially real-time in accordance with the consumption of the developer in the developer accommodating portion.

AUSTRALIAN PATENT OFFICE

It is a further advantage of the foregoing to provide a measuring part capable of detecting a developer remainder using a change of the electrostatic capacity between electrodes, wherein the measurement error attributable to the changes of the ambient conditions to accomplish detection of the amount of the developer with small detection error.

It is a further advantage of the foregoing to provide a process cartridge, a developing device and an electrophotographic image forming apparatus wherein a detection accuracy of an amount of a developer is improved, and the number of parts of contact portions thereof is reduced to suppress the cost.

It is a further advantage of the foregoing to provide a process cartridge, a developing device and an electrophotographic image forming apparatus wherein an assembling operativity is improved.

It is a further advantage of the foregoing to provide a measuring part which can be manufactured with small numbers of parts.

It is a further advantage of the foregoing to provide a measuring part, wherein an assembling operativity of a developing device and a process cartridge is improved.

AUSTRALIAN PATENT OFFICE

The claims defining the invention are as follows:

1. A process cartridge detachably mountable to an electrophotographic image forming apparatus, said process cartridge comprising:

(a) an electrophotographic photosensitive member;

(b) process means actable on said electrophotographic photosensitive member;

(c) a measuring electrode member having input side and output side electrodes having at least one juxtaposed portion, said measuring electrode member being disposed at such a position that it is contacted to a developer;

(d) a reference electrode member having input side and output side electrodes having at least one juxtaposed portion, said reference electrode member being disposed at such a position that it is out of contact with the developer;

(e) an output contact for said measuring electrode member, connected electrically to said output side electrode of said measuring electrode member;

(f) an output contact for said reference electrode member, connected electrically to said output side electrode of said reference electrode member; and

(g) a common input contact connected electrically to said input side electrodes of said measuring electrode member and said reference electrode member.

2. A process cartridge according to claim 1, wherein said measuring electrode member is disposed in a developer accommodating portion for accommodating the developer to be used for development of an electrostatic latent image by developing means as said process means, and the position of said measuring electrode member is such that it is contacted to the developer in said developer accommodating portion.

AUSTRALIAN PATENT OFFICE

3. A process cartridge according to claim 1 or 2, wherein said reference electrode member is disposed in a developer accommodating portion for accommodating the developer to be used for development of an electrostatic latent image by developing means as said process means, and the position of said reference electrode member is such that it is out of contact with the developer in said developer accommodating portion.

4. A process cartridge according to claim 1 or 2, wherein said measuring electrode member and said reference electrode member are manufactured by forming electrode patterns on the same side of one substrate.

5. A process cartridge according to claim 4, wherein said measuring electrode member and said reference electrode member generate substantially the same electrostatic capacity when a voltage is applied thereto without the developer.

6. A process cartridge according to claim 4, wherein a length of an opposed portion of said juxtaposed portions and a gap therebetween in said measuring electrode member are substantially the same as those of said reference electrode member, respectively.

7. A process cartridge according to claim 2 or 3, wherein said developing means has an electrode rod for detecting substantial absence of the developer.

8. A process cartridge according to any one of claims 1-7, wherein said process cartridge contains as a unit said electrophotographic photosensitive member, and

AUSTRALIAN PATENT OFFICE

at least one of charging means, developing means and cleaning means as said process means.

9. A process cartridge according to any one of claims 1-7, wherein said process cartridge contains as a unit said electrophotographic photosensitive member, and developing means as said process means.

10. An electrophotographic image forming apparatus for forming an image on a recording material, to which apparatus a process cartridge is detachably mountable, comprising:

(a) mounting means for detachably mounting the process cartridge to the main assembly of the electrophotographic image forming apparatus, the process cartridge including:

an electrophotographic photosensitive member;

process means actable on said electrophotographic photosensitive member;

a measuring electrode member having input side and output side electrodes having at least one juxtaposed portion, said measuring electrode member being disposed at such a position that it is contacted to a developer;

a reference electrode member having input side and output side electrodes having at least one juxtaposed portion, said reference electrode member being disposed at such a position that it is out of contact with the developer;

an output contact for said measuring electrode member, connected electrically to said output side electrode of said measuring electrode member;

an output contact for said reference electrode member, connected electrically to said output side electrode of said reference electrode member; and

AUSTRALIAN PATENT OFFICE

a common input contact connected electrically to said input side electrodes of said measuring electrode member and said reference electrode member;

(b) display means for displaying an amount of the developer determined on the basis of outputs from said output contact for said measuring electrode member and said output contact for said reference electrode member; and

(c) feeding means for feeding said recording material.

11. An apparatus according to claim 10, wherein said measuring electrode member is disposed in a developer accommodating portion for accommodating the developer to be used for development of an electrostatic latent image by developing means as said process means, and the position of said measuring electrode member is such that it is contacted to the developer in said developer accommodating portion.

12. An apparatus according to claim 10 or 11, wherein said reference electrode member is disposed in a developer accommodating portion for accommodating the developer to be used for development of an electrostatic latent image by developing means as said process means, and the position of said reference electrode member is such that it is out of contact with the developer in said developer accommodating portion.

13. An apparatus according to claim 10 or 11, wherein said measuring electrode member and said reference electrode member are manufactured by forming electrode patterns on the same side of one substrate.

AUSTRALIAN PATENT OFFICE

14. An apparatus according to claim 13, wherein said measuring electrode member and said reference electrode member generate substantially the same electrostatic capacity when a voltage is applied thereto without contact with the developer.

15. An apparatus according to claim 13, wherein a length of an opposed portion of said juxtaposed portions and a gap therebetween in said measuring electrode member are substantially the same as those of said reference electrode member, respectively.

16. An apparatus according to claim 11 or 12, wherein said developing means has an electrode rod for detecting substantial absence of the developer.

17. An apparatus according to claim 10, wherein said process cartridge contains as a unit said electrophotographic photosensitive member, and at least one of charging means, developing means and cleaning means as said process means.

18. An apparatus according to claim 10, wherein said process cartridge contains as a unit said electrophotographic photosensitive member, and developing means as said process means.

19. A developing device for being provided in a main assembly of an electrophotographic image forming apparatus comprising:

(a) a developer accommodating portion for accommodating a developer to be used for developing an electrostatic latent image formed on an electrophotographic photosensitive member;

AUSTRALIAN PATENT OFFICE

(b) developing means for developing an electrostatic latent image with the developer accommodated in said developer accommodating portion;

(c) a measuring electrode member having input side and output side electrodes having at least one juxtaposed portion, said measuring electrode member being disposed at such a position that it is contacted to the developer;

(d) a reference electrode member having input side and output side electrodes having at least one juxtaposed portion, said reference electrode member being disposed at such a position that it is out of contact with the developer;

(e) an output contact for said measuring electrode member, connected electrically to said output side electrode of said measuring electrode member;

(f) an output contact for said reference electrode member, connected electrically to said output side electrode of said reference electrode member; and

(g) a common input contact connected electrically to said input side electrodes of said measuring electrode member and said reference electrode member.

20. A device according to claim 19, wherein the position of said measuring electrode member is such that it is contacted to the developer in said developer accommodating portion.

21. A device according to claim 19, wherein the position of said reference electrode member is such that it is out of contact with the developer in said developer accommodating portion.

AUSTRALIAN PATENT OFFICE

22. A device according to claim 19 or 20, wherein said measuring electrode member and said reference electrode member are manufactured by forming electrode patterns on the same side of one substrate.

23. A device according to claim 22, wherein said measuring electrode member and said reference electrode member generate substantially the same electrostatic capacity when a voltage is applied thereto without contact with the developer.

24. A device according to claim 19 or 22, wherein a length of an opposed portion of said juxtaposed portions and a gap therebetween in said measuring electrode member are substantially the same as those of said reference electrode member, respectively.

25. A device according to any one of claims 19-24, wherein said developing means has an electrode rod for detecting substantial absence of the developer.

26. An electrophotographic image forming apparatus for forming an image on a recording material, said electrophotographic image forming apparatus comprising:

an electrophotographic photosensitive member;

developing means for developing with a developer an electrostatic latent image formed on said electrophotographic photosensitive member;

a measuring electrode member having input side and output side electrodes having at least one juxtaposed portion, said measuring electrode member being disposed at such a position that it is contacted to the developer;

AUSTRALIAN PATENT OFFICE

a reference electrode member having input side and output side electrodes having at least one juxtaposed portion, said reference electrode member being disposed at such a position that it is out of contact with the developer;

an output contact for said measuring electrode member, connected electrically to said output side electrode of said measuring electrode member;

an output contact for said reference electrode member, connected electrically to said output side electrode of said reference electrode member; and

a common input contact connected electrically to said input side electrodes of said measuring electrode member and said reference electrode member;

display means for displaying an amount of the developer determined on the basis of outputs from said output contact for said measuring electrode member and said output contact for said reference electrode member; and

electrostatic latent image forming means for forming the electrostatic latent image on said electrophotographic photosensitive member.

27. An apparatus according to claim 26, wherein said measuring electrode member is disposed in a developer accommodating portion for accommodating the developer to be used for development of an electrostatic latent image by said developing means, and the position of said measuring electrode member is such that it is contacted to the developer in said developer accommodating portion.

28. An apparatus according to claim 27, wherein said reference electrode member is disposed in a developer accommodating portion for accommodating the developer to be used for development of an electrostatic latent image by said developing

AUSTRALIAN PATENT OFFICE

means, and the position of said reference electrode member is such that it is out of contact with the developer in said developer accommodating portion.

29. An apparatus according to claim 27 or 28, wherein said measuring electrode member and said reference electrode member are manufactured by forming electrode patterns on the same side of one substrate.

30. An apparatus according to claim 29, wherein said measuring electrode member and said reference electrode member generate substantially the same electrostatic capacity when a voltage is applied thereto without contact with the developer.

31. An apparatus according to claim 26 or 29, wherein a length of an opposed portion of said juxtaposed portions and a gap therebetween in said measuring electrode member are substantially the same as those of said reference electrode member, respectively.

32. An apparatus according to any one of claims 26-31, wherein said developing means has an electrode rod for detecting substantial absence of the developer.

33. A measuring part for detecting an amount of a developer, comprising:

(a) a measuring electrode member having input side and output side electrodes having at least one juxtaposed portion, said measuring electrode member being disposed at such a position that it is contacted to the developer;

AUSTRALIAN PATENT OFFICE

(b) a reference electrode member having input side and output side electrodes having at least one juxtaposed portion, said reference electrode member being disposed at such a position that it is out of contact with the developer;

(c) an output contact for said measuring electrode member, connected electrically to said output side electrode of said measuring electrode member;

(d) an output contact for said reference electrode member, connected electrically to said output side electrode of said reference electrode member; and

(e) a common input contact connected electrically to said input side electrodes of said measuring electrode member and said reference electrode member.

34. A measuring part according to claim 33, wherein said measuring electrode member is disposed in a developer accommodating portion for accommodating the developer to be used for development of an electrostatic latent image by developing means, and the position of said measuring electrode member is such that it is contacted to the developer in said developer accommodating portion.

35. A measuring part according to claim 33 or 34, wherein said reference electrode member is disposed in a developer accommodating portion for accommodating the developer to be used for development of an electrostatic latent image by said developing means, and the position of said reference electrode member is such that it is out of contact with the developer in said developer accommodating portion.

36. A measuring part according to claim 33 or 34, wherein said measuring electrode member and said reference electrode member are manufactured by forming electrode patterns on the same side of one substrate.

AUSTRALIAN PATENT OFFICE

37. A measuring part according to claim 36, wherein said measuring electrode member and said reference electrode member generate substantially the same electrostatic capacity when a voltage is applied thereto without contact with the developer.

38. A measuring part according to claim 36, wherein a length of an opposed portion of said juxtaposed portions and a gap therebetween in said measuring electrode member are substantially the same as those of said reference electrode member, respectively.

39. A measuring part according to any one of claim 35, wherein said developing means has an electrode rod for detecting substantial absence of the developer.

40. A process cartridge according to claim 1, wherein said juxtaposed portions of said measuring electrode member are arranged at regular intervals.

41. A process cartridge according to claim 1 or 40, wherein said juxtaposed portions of said reference electrode member are arranged at regular intervals.

42. An apparatus according to claim 10 or 26, wherein said juxtaposed portions of said measuring electrode member are arranged at regular intervals.

43. An apparatus according to claim 10, 26 or 42, wherein said juxtaposed portions of said reference electrode member are arranged at regular intervals.

AUSTRALIAN PATENT OFFICE

44. A device according to claim 19, wherein said juxtaposed portions of said measuring electrode member are arranged at regular intervals.

45. A device according to claim 19 or 44, wherein said juxtaposed portions of said reference electrode member are arranged at regular intervals.

46. A device according to claim 33, wherein said juxtaposed portions of said measuring electrode member are arranged at regular intervals.

47. A device according to claim 33 or 46, wherein said juxtaposed portions of said reference electrode member are arranged at regular intervals.

48. A process cartridge detachably mountable to a main assembly of an electrophotographic image forming apparatus, said process cartridge comprising:

(a) an electrophotographic photosensitive member;

(b) a developing roller for developing a latent image formed on said electrophotographic photosensitive member;

(c) a measuring electrode member having input-side and output-side electrodes, said measuring electrode member being disposed at such a position that it is contacted to a developer accommodated in said process cartridge;

(d) a reference electrode member having input-side and output-side electrodes, said reference electrode member being disposed at such a position that it is out of contact with the developer accommodated in said process cartridge;

AUSTRALIAN PATENT OFFICE

(e) an output contact for said measuring electrode member, connected electrically to said output side electrode of said measuring electrode member;

(f) an output contact for said reference electrode member, connected electrically to said output-side electrode of said reference electrode member; and

(g) a common input contact connected electrically to said input side electrodes of said measuring electrode member and said reference electrode member, wherein said output contact for said measuring electrode member, said output contact for said reference electrode member and said common input contact are provided exposed on said cartridge frame, and an amount of the developer in said process cartridge is capable of being detected by said main assembly using outputs, corresponding to electrostatic capacities from said output contact for said measuring electrode member and from said output contact for said reference electrode member.

49. A process cartridge according to claim 48, wherein said measuring electrode member is disposed in a developer accommodating portion for accommodating the developer to be used for development of an electrostatic latent image by said developing means, and the position of said measuring electrode member is such that it is contacted to the developer in said developer accommodating portion.

50. A process cartridge according to claim 48 or 49, wherein said reference electrode member is disposed in a developer accommodating portion for accommodating the developer to be used for development of an electrostatic latent image by a developing roller, and the position of said reference electrode member is such that it is out of contact with the developer in said developer accommodating portion.

AUSTRALIAN PATENT OFFICE

51. A process cartridge according to claim 49, wherein said measuring electrode member and said reference electrode member are manufactured by forming electrode patterns on the same side of one substrate, wherein said substrate is folded substantially at its center, and said reference electrode member is disposed in said developer accommodating portion, in which said measuring electrode is disposed, so as to avoid contact with the developer by a partition wall.

52. A process cartridge according to claim 51, wherein said measuring electrode member and said reference electrode member generate substantially the same electrostatic capacity when a voltage is applied thereto.

53. A process cartridge according to claim 51, wherein said measuring electrode member has at least one juxtaposed portion, and said reference electrode member has at least one juxtaposed portion, and a length of an opposed portion of said juxtaposed portions and a gap therebetween in said measuring electrode member are substantially the same as those of said reference electrode member, respectively.

54. A process cartridge according to any one of claims 48, 49, 51, 52, or 53, further comprising an electrode rod, extended in a longitudinal direction of said developing roller, for detecting substantial absence of the developer.

55. A process cartridge according to claim 48, wherein said process cartridge frame includes a side frame provided at longitudinal end of said developing frame supporting said developing roller.

AUSTRALIAN PATENT OFFICE

56. A process cartridge according to claim 1 or 48, wherein said measuring electrode member is positioned for contact to the developer and is oriented such that an area in which said measuring electrode member is contacted to the developer changes with a reduction of the developer.

57. A device according to claim 19, wherein said measuring electrode member is positioned for contact to the developer and is oriented such that an area in which said measuring electrode member is contacted to the developer changes with a reduction of the developer.

58. A process cartridge substantially as herein described with reference to any one of the embodiments as illustrated in Figs. 1 to 19.

59. An electrophotographic image forming apparatus substantially as herein described with reference to any one of the embodiments as illustrated in Figs. 1 to 19.

60. A developing device substantially as herein described with reference to any one of the embodiments as illustrated in Figs. 1 to 19.

61. A measuring part for detecting an amount of a developer substantially as herein described with reference to any one of the embodiments as illustrated in Figs. 1 to 19.

AUSTRALIAN PATENT OFFICE

62. A process cartridge substantially as herein described with reference to any one of the embodiments as illustrated in Figs. 1 to 19.

DATED this fifteenth Day of January, 2002

Canon Kabushiki Kaisha

Patent Attorneys for the Applicant

SPRUSON & FERGUSON

AUSTRALIAN PATENT OFFICE

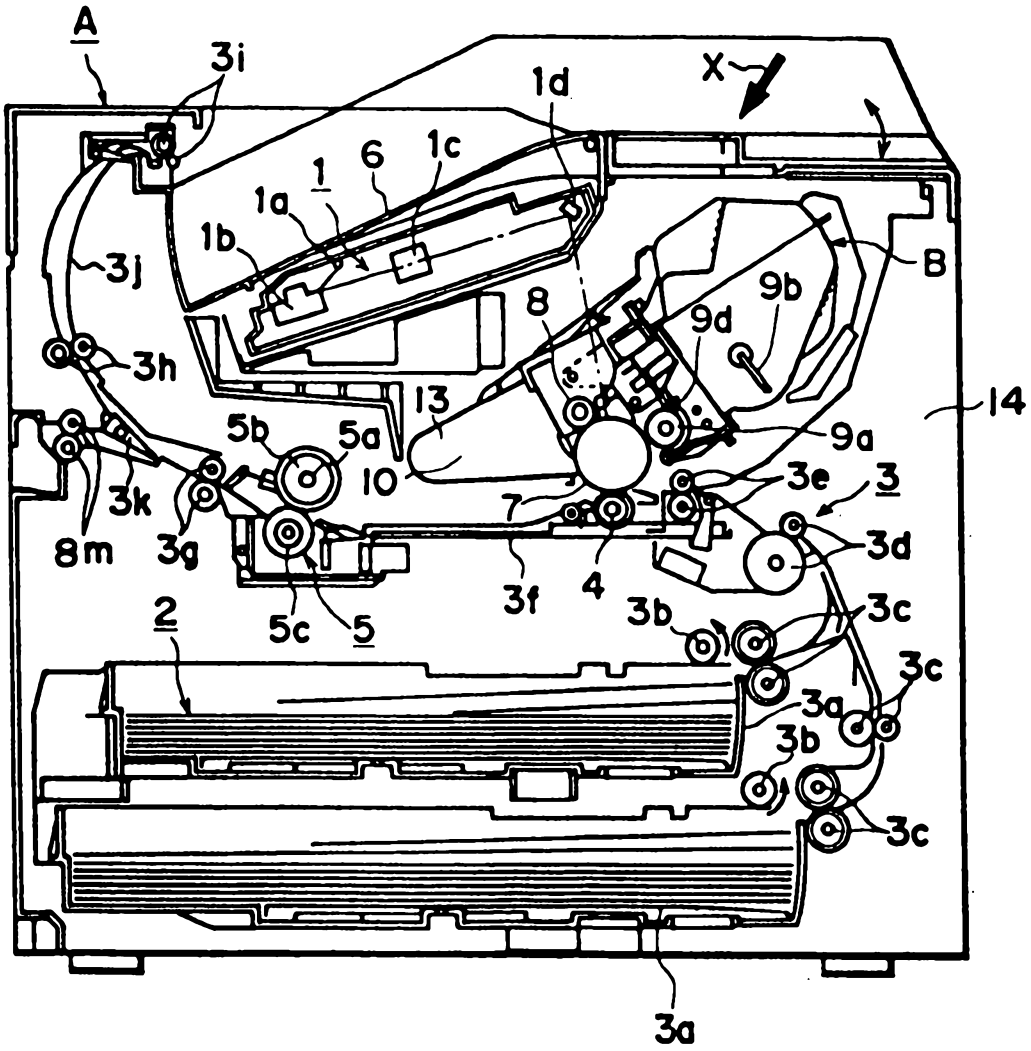
A
3i
1d
X
1
6
1c
1a
1b
3j
B
8
9b
9d
3h
13
14
5b
5a
9a
10
3e
3
3k
7
3d
8m
3g
3f
4
3b
3c
2
5c
5
3c
3a
3b
3c
3a

FIG. 1

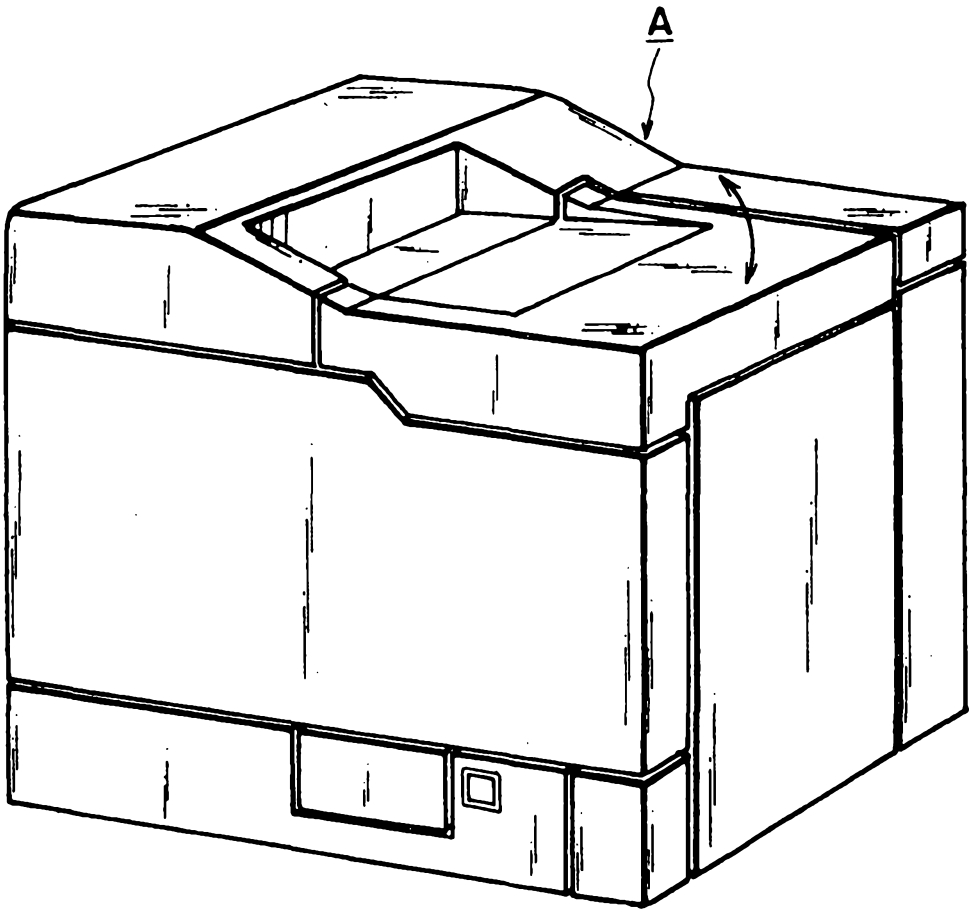

FIG. 2

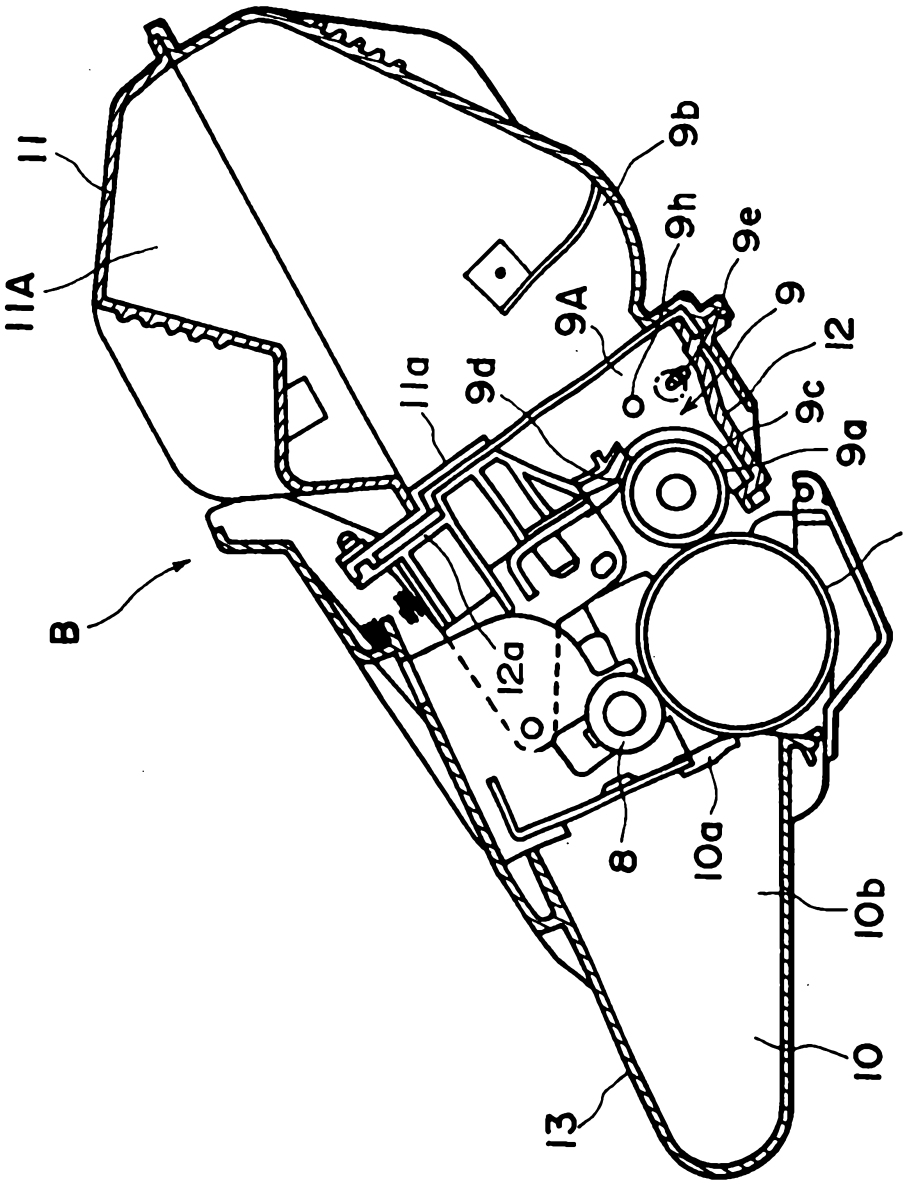

FIG. 3

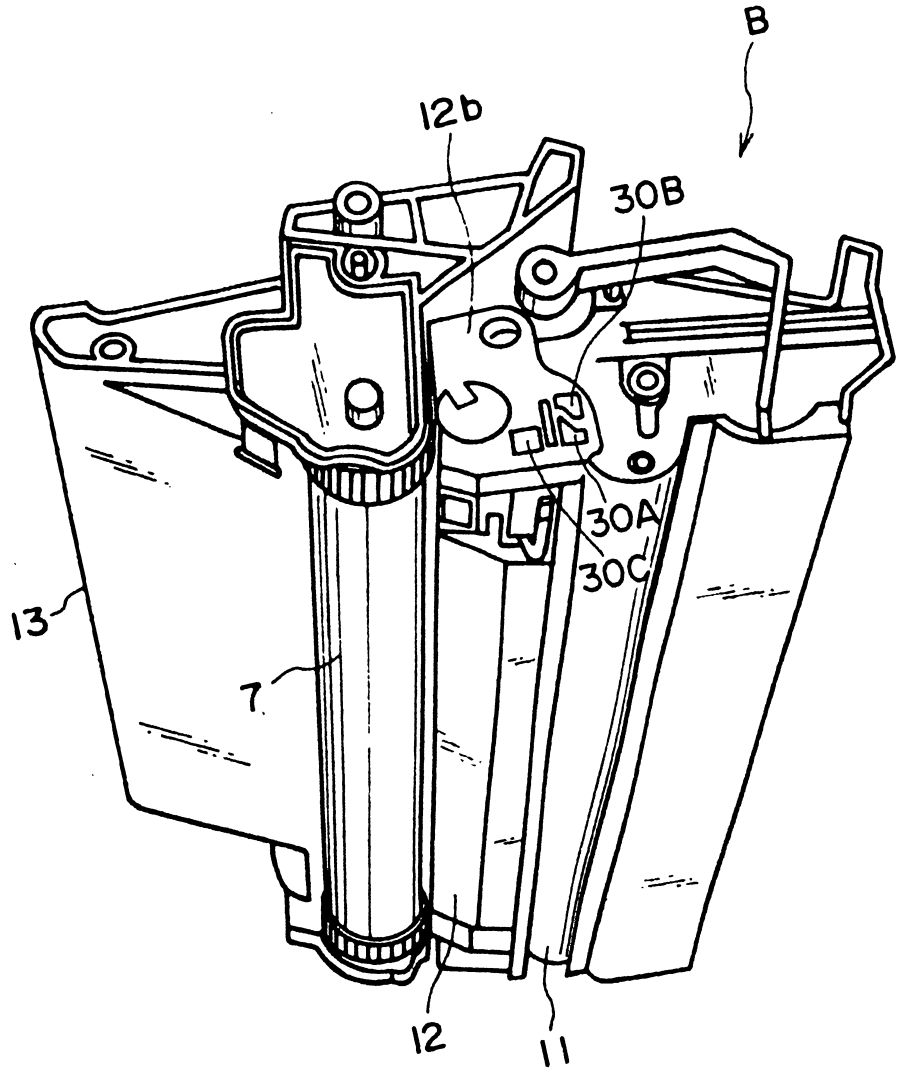

FIG. 4

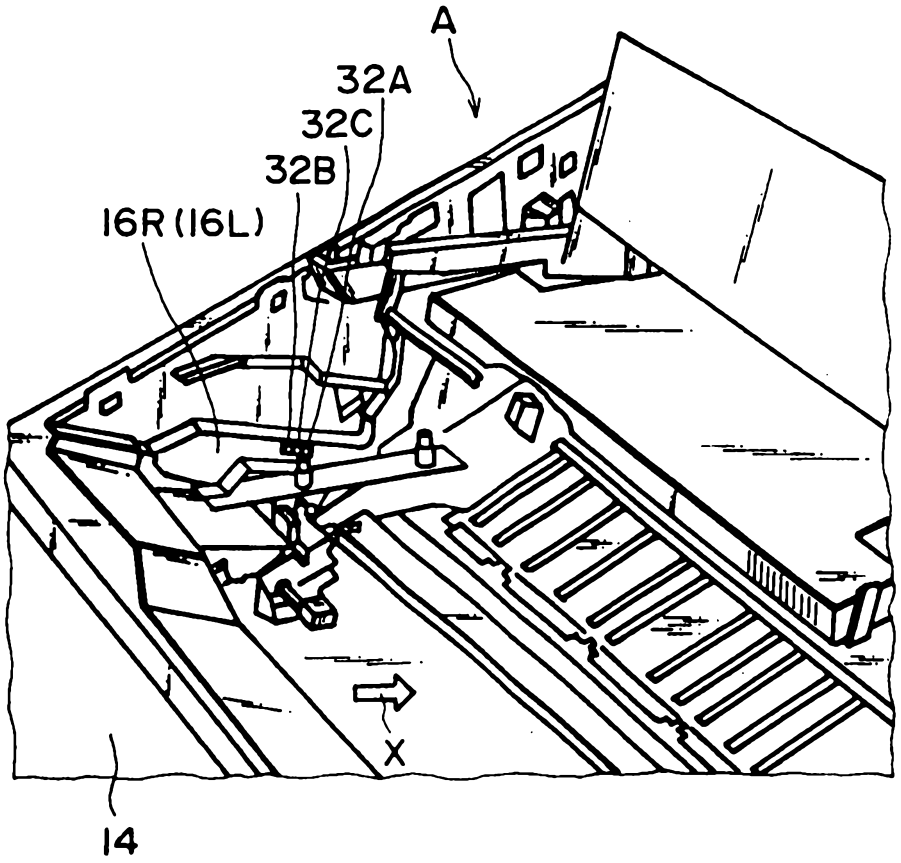

FIG. 5

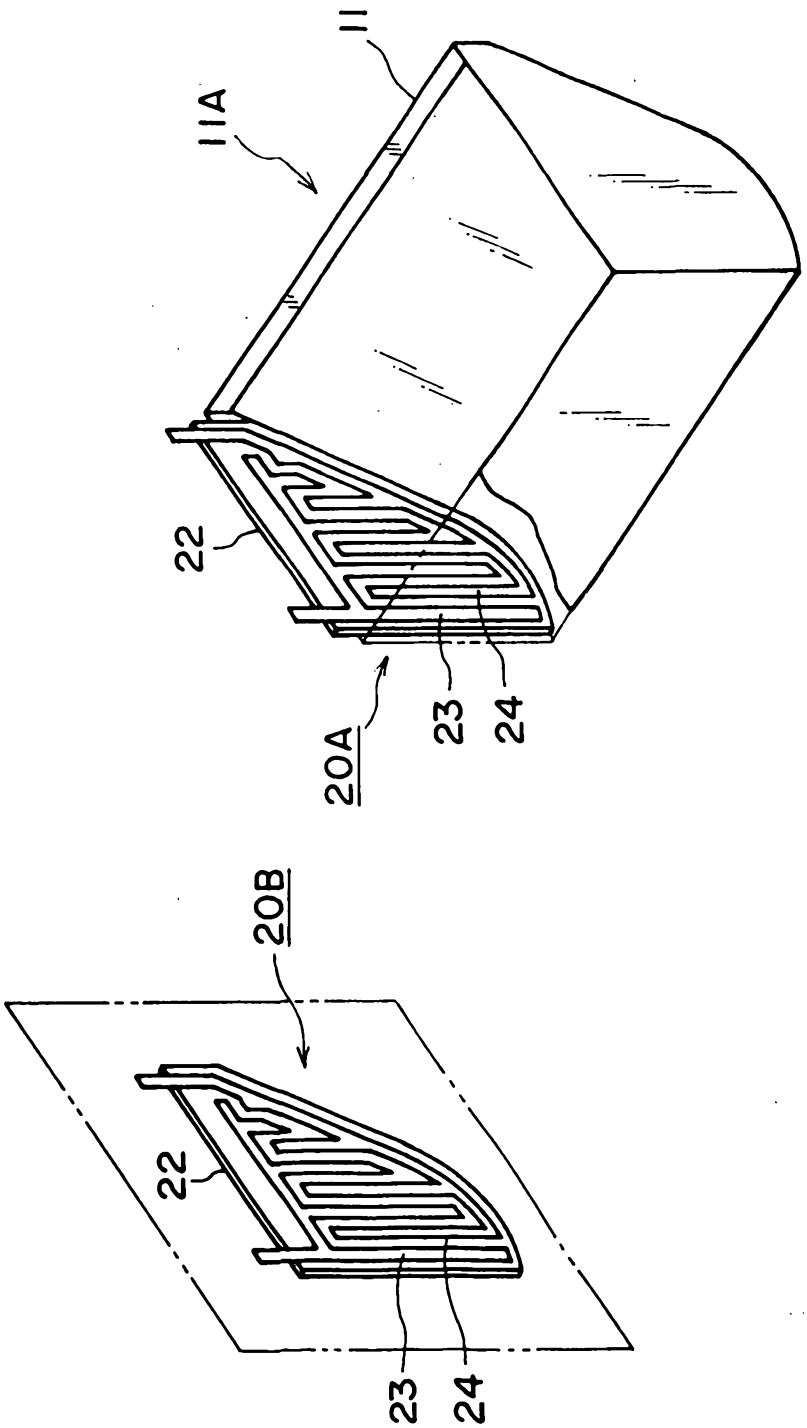

FIG. 6

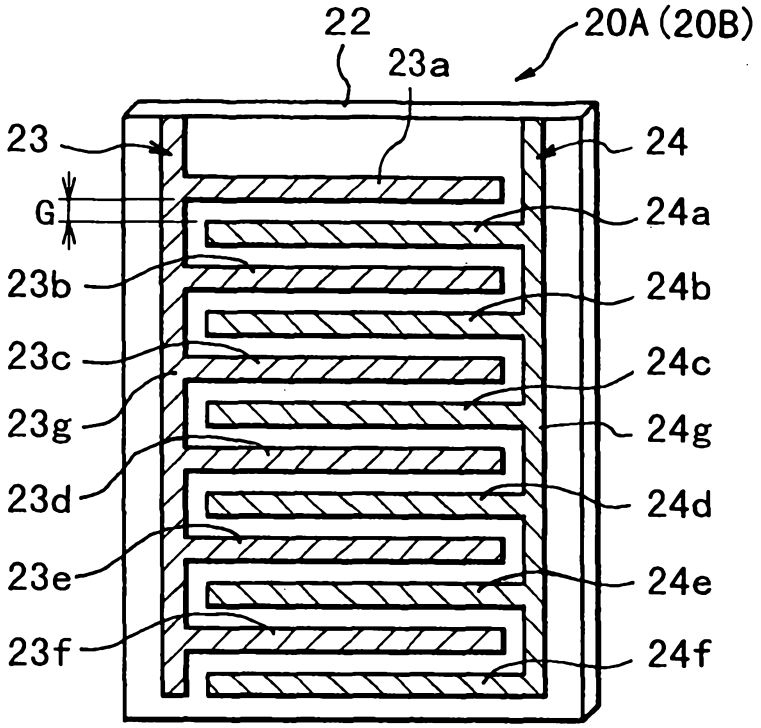
22
20A (20B)
23a
23
24
G
24a
23b
24b
23c
24c
23g
24g
23d
24d
23e
24e
23f
24f

FIG. 7

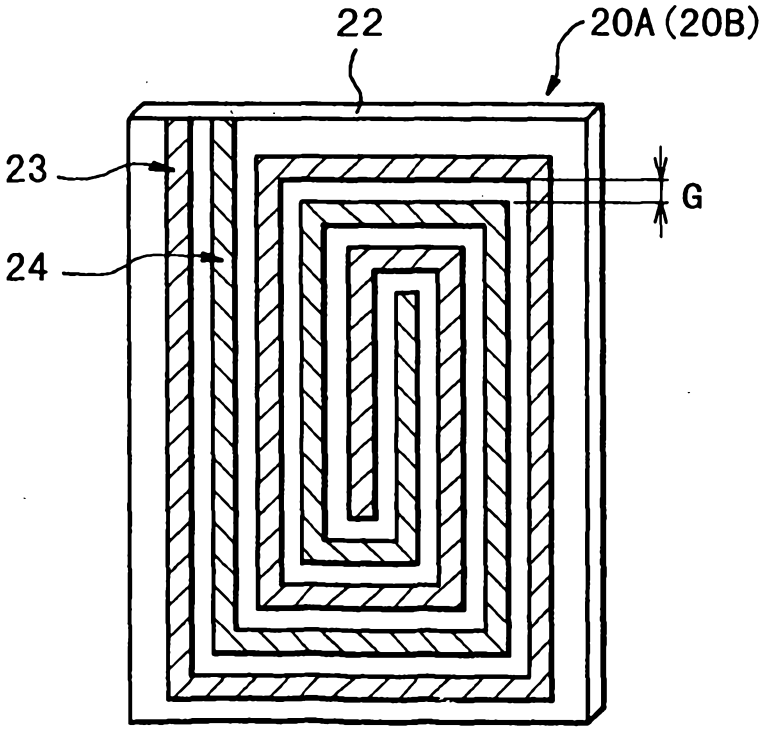
22
20A (20B)
23
G
24

FIG. 8

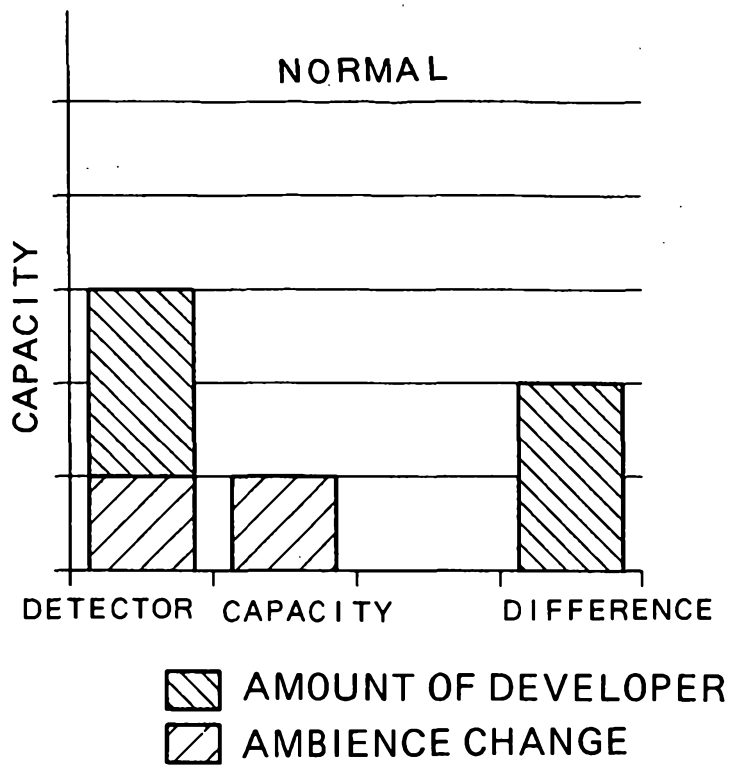
NORMAL
CAPACITY
DETECTOR CAPACITY
DIFFERENCE
AMOUNT OF DEVELOPER
AMBIENCE CHANGE

FIG. 9

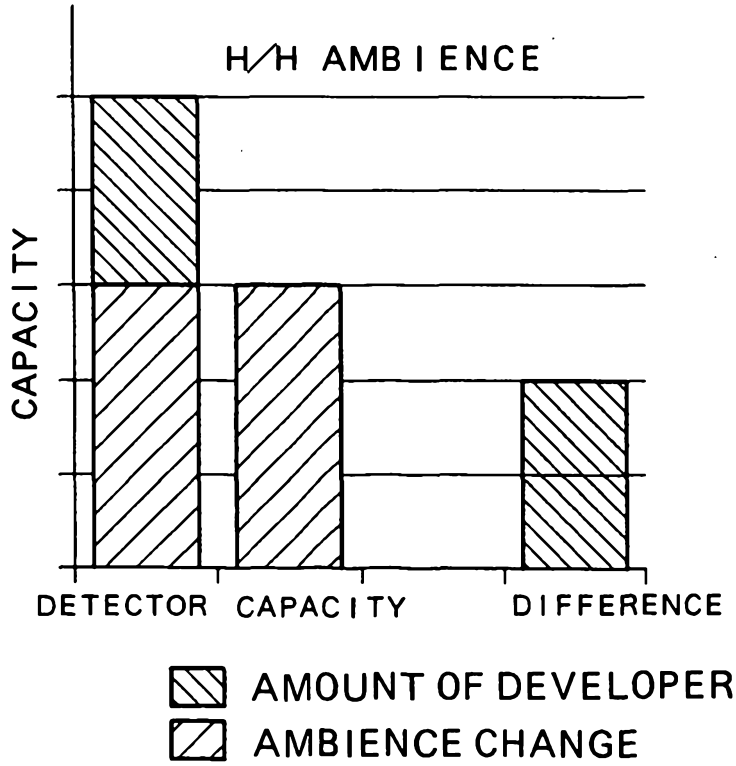
H/H AMBIENCE
CAPACITY
DETECTOR CAPACITY
DIFFERENCE
AMOUNT OF DEVELOPER
AMBIENCE CHANGE

FIG. 10

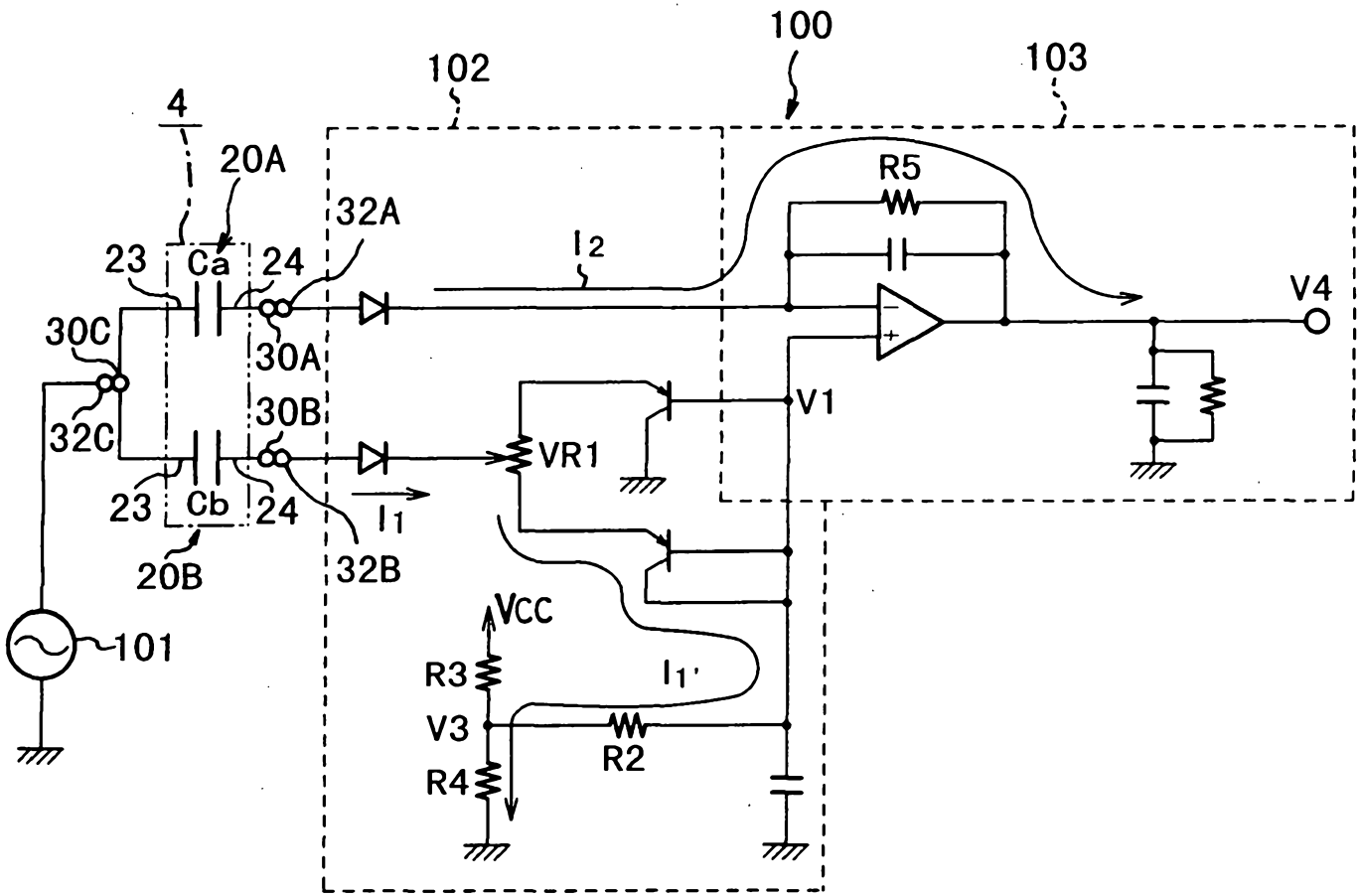
100
102
103
4
20A
32A
23
Ca
24
I2
R5
V4
30C
30A
30B
32C
V1
VR1
23
Cb
24
I1
20B
32B
Vcc
101
R3
I1'
V3
R2
R4

FIG. 11

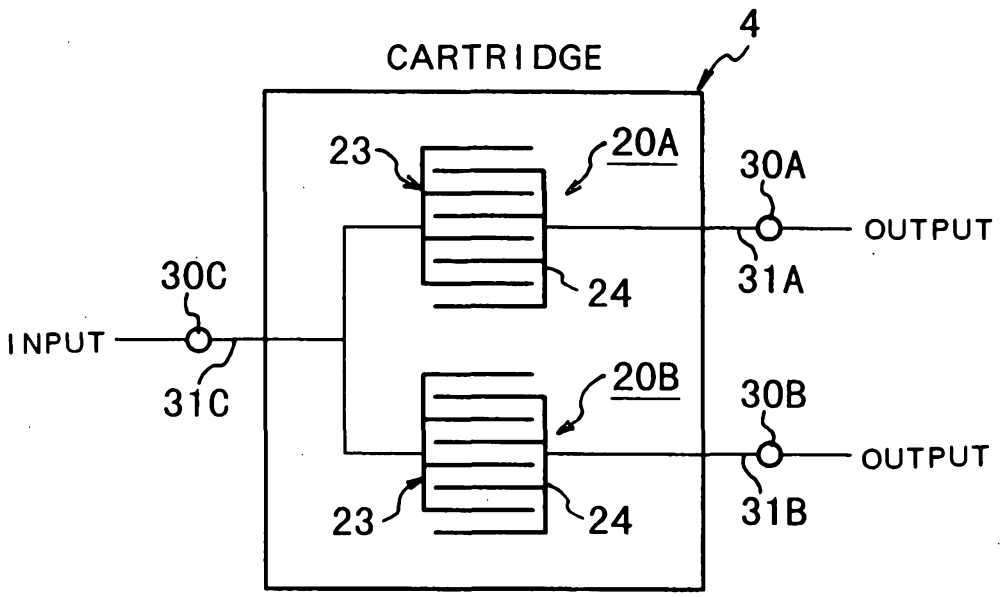
CARTRIDGE
4
23
20A
30A
OUTPUT
31A
30C
24
INPUT
31C
20B
30B
OUTPUT
23
24
31B

FIG. 12

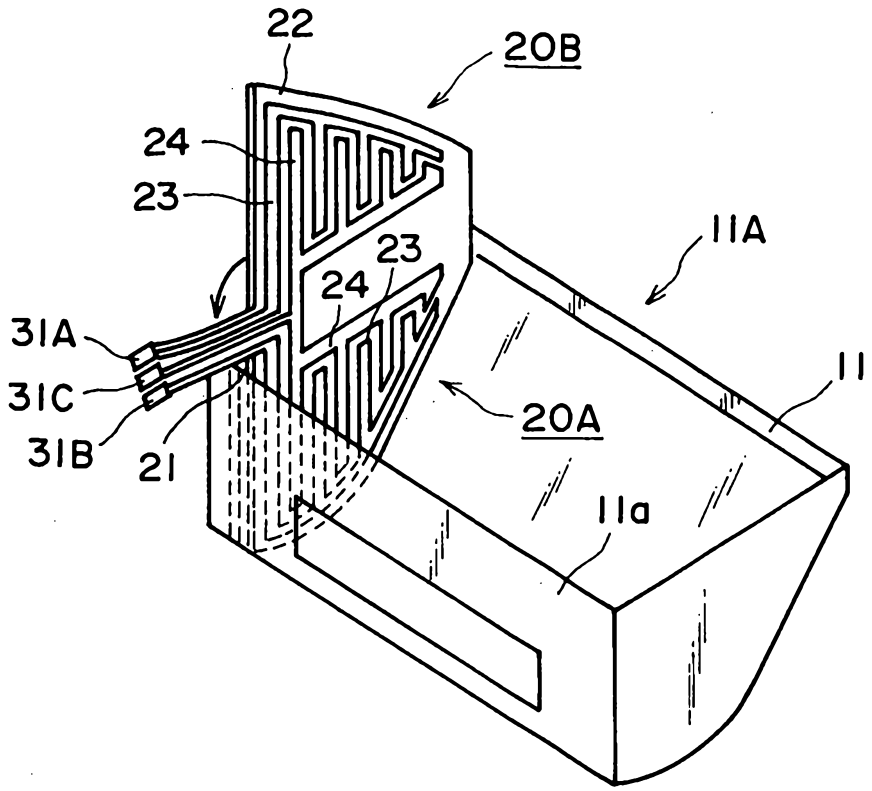
22
20B
24
23
23
24
11A
31A
31C
31B
21
20A
11
11a

FIG. 13

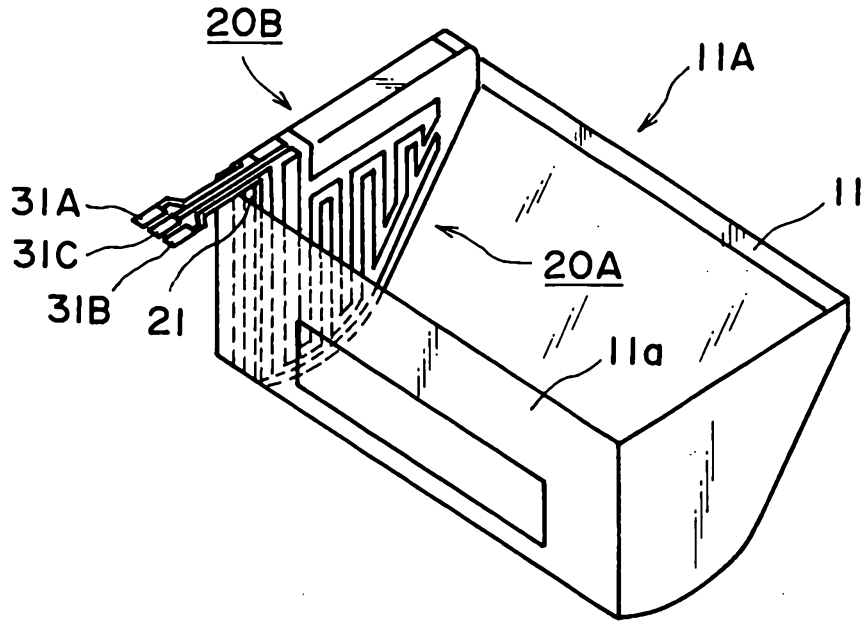
20B
11A
31A
31C
31B
21
20A
11
11a

FIG. 14

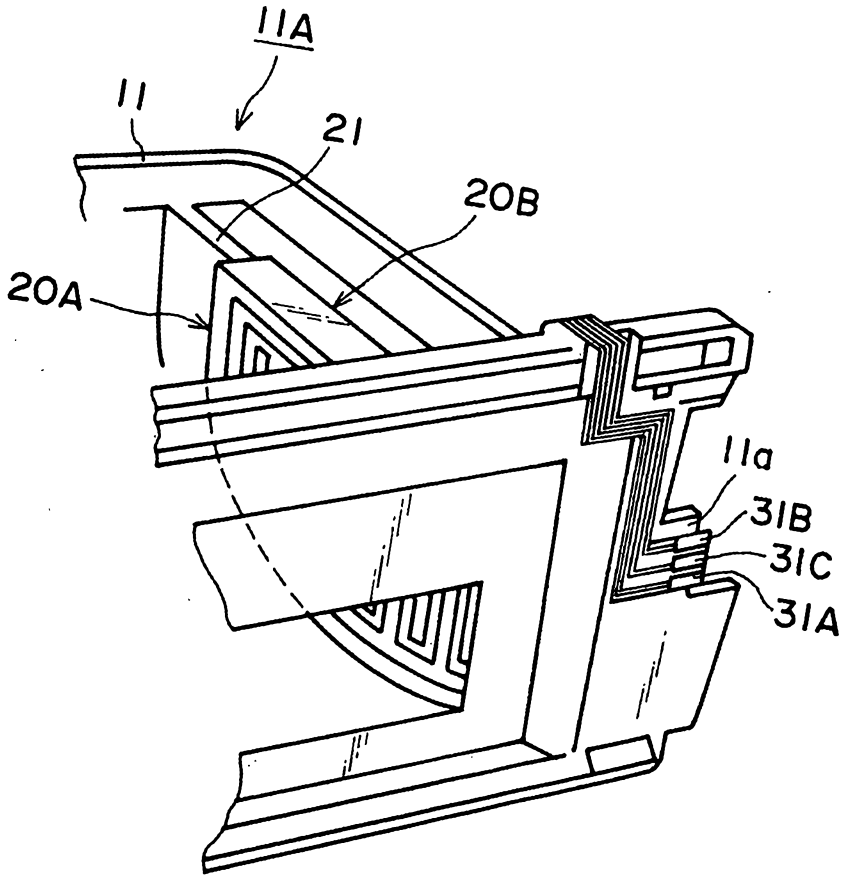

FIG. 15

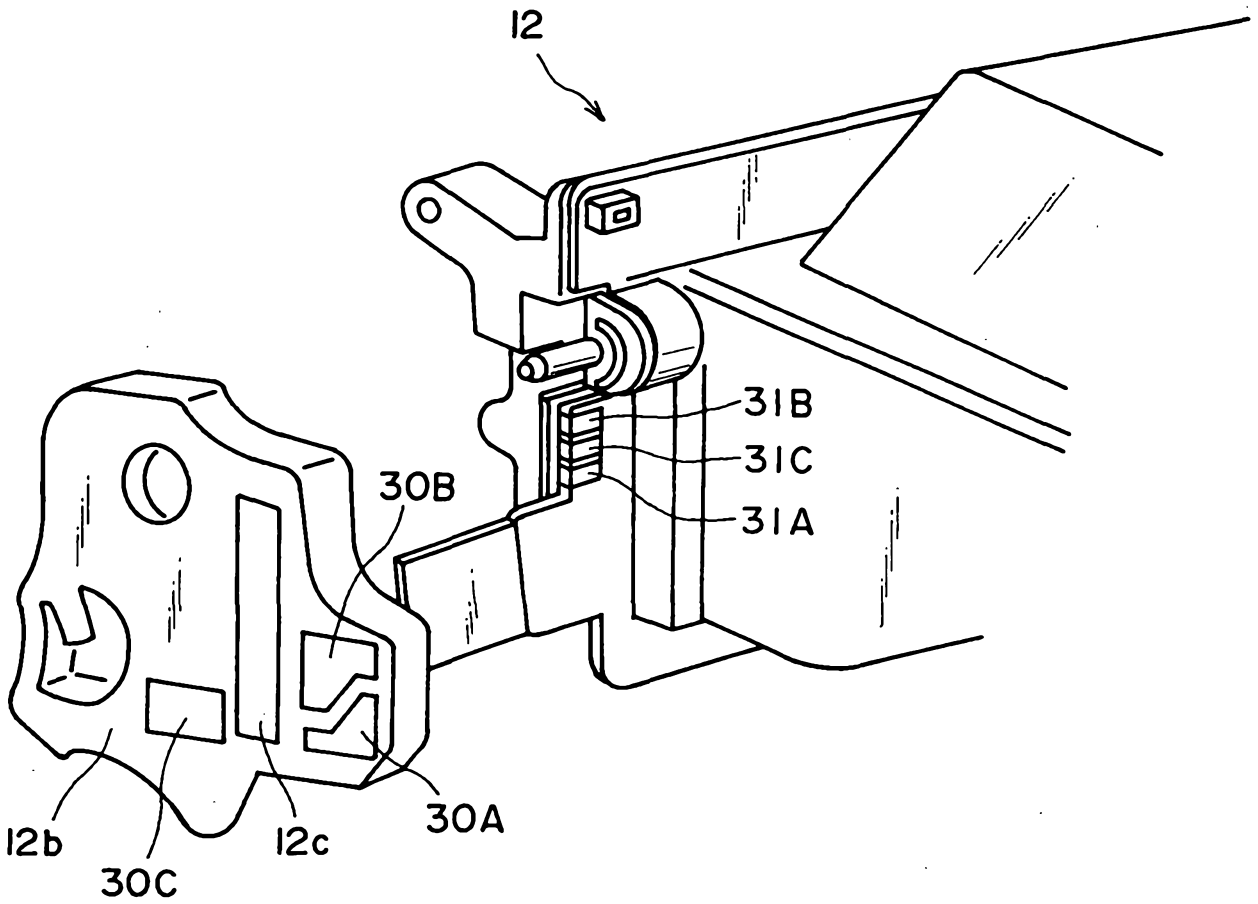

FIG. 16

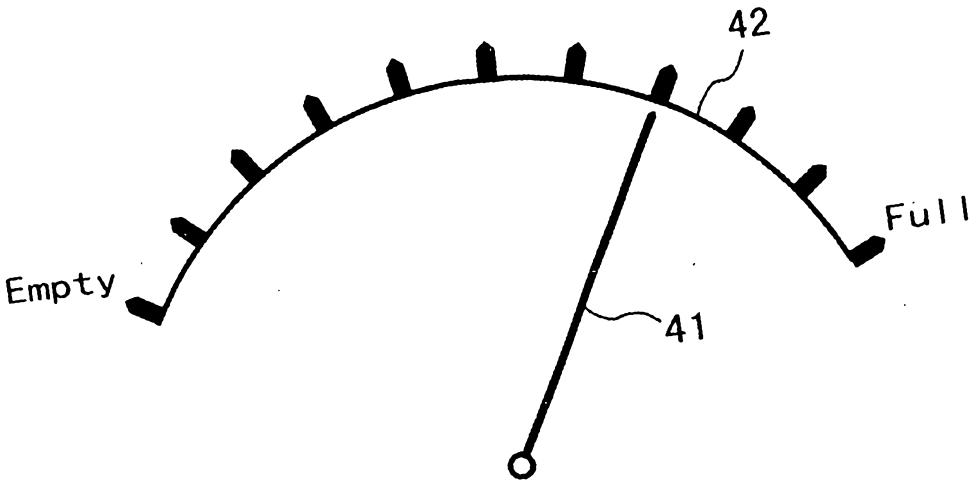

FIG. 17

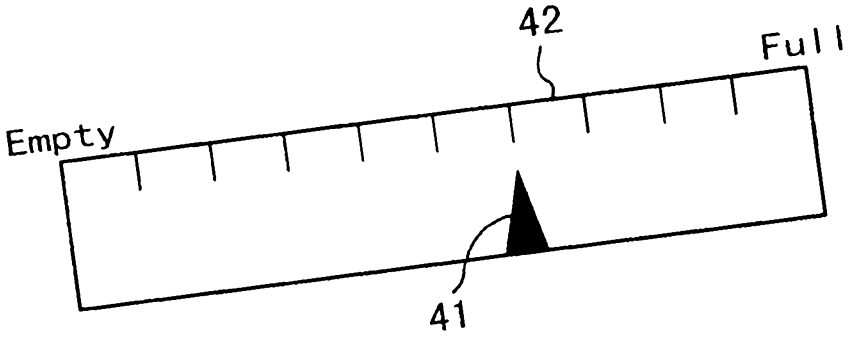

FIG. 18

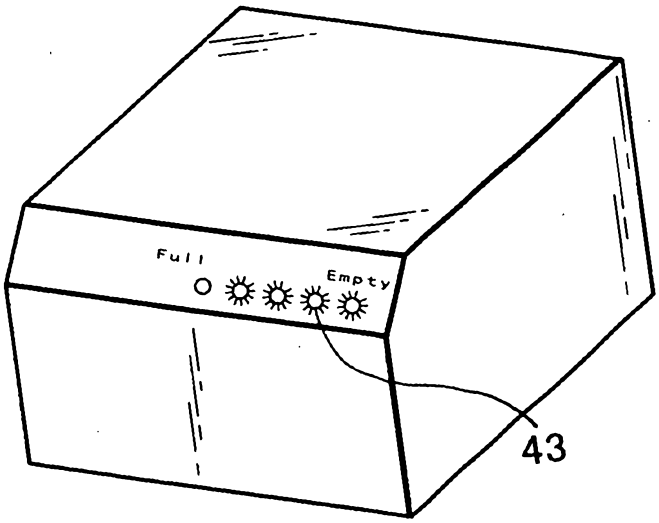

FIG. 19