(19) Europäisches Patentamt
European Patent Office
Office européen des brevets

(11) Publication number: **0 588 125 A1**

(12) EUROPEAN PATENT APPLICATION

(21) Application number: **93113741.8**

(51) Int. Cl.5: **A61N 1/39**, A61N 1/365

(22) Date of filing: **27.08.93**

(30) Priority: **16.09.92 SE 9202662**

(43) Date of publication of application:
23.03.94 Bulletin 94/12

(84) Designated Contracting States:
DE FR GB IT NL

(71) Applicant: **Siemens Elema AB**
Röntgenvägen 2
S-171 95 Solna 1(SE)

(72) Inventor: **Hedberg, Sven-Erik**
Odonstigen 5
S-196 32 Kungsängen(SE)
Inventor: **Obel, Martin**
Bergavägen 5
S-182 33 Danderyd(SE)
Inventor: **Högnelid, Kurt**
Villavägen 306
S-137 38 Västerhaninge(SE)

(54) Apparatus for producing heart defibrillation sequences from stimulation pulses and defibrillation shocks.

(57) An apparatus for producing heart defibrillation sequences formed of stimulation pulses and defibrillation shocks contains a unit (22) for delivering stimulation pulses through an intracardiac or epicardiac electrode for pacemaker stimulation and a defibrillator circuitry (18) for delivering defibrillation shocks through defibrillation electrodes. A control unit (20) is connected to said unit (22) for delivering stimulation pulses and to said defibrillator circuitry (18) for determining the times for delivering the stimulation pulses and the defibrillation shocks.

FIG 4

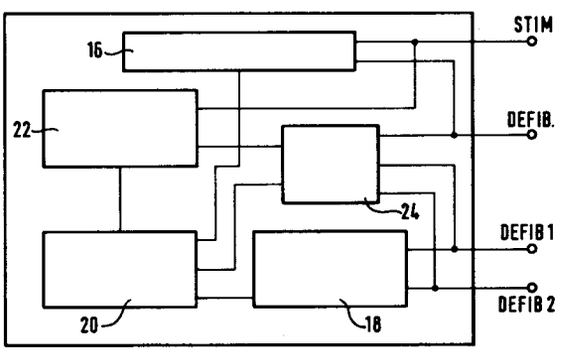

EP 0 588 125 A1

This invention relates to an apparatus for producing heart defibrillation sequences from stimulation pulses and defibrillation shocks.

Heart defibrillation is currently performed by the discharge of a powerful voltage pulse between two electrodes. The electrodes are placed so the discharge takes place over the heart or a large part thereof. The energy in a pulse amounts typically to several to a few dozen joules.

The large energy required in the defibrillation pulse has shortcomings. For devices with both defibrillation and pacemaker functions, i.e. devices designed to normally operate as pacemakers, the high energy consumed in defibrillation shortens the life of the apparatus considerably. The powerful energy discharge also has certain adverse effects on the organism.

The object of the present invention is to reduce these shortcomings in heart defibrillation according to the prior art and produce an apparatus which makes defibrillation possible with less energy.

This object is achieved with an apparatus of the above-described type with the features specified in claim 1.

With the apparatus according to the invention, stimulation pulses are delivered through an intracardiac or epicardiac electrode intended for pacemaker stimulation. These stimulation pulses achieve part of the heart's defibrillation, i.e. primarily in the area around the stimulation electrode employed. Other parts of the heart are defibrillated with defibrillation shocks in the customary manner. In this way, effective defibrillation can be achieved with considerably less defibrillation energy than has hitherto been possible. The stimulation pulses used can be high-energy stimulation pulses with an amplitude and/or pulse duration which greatly exceed the amplitude and/or pulse duration of ordinary pacemaker pulses, the high-energy stimulation pulses however containing considerably less energy than an ordinary defibrillation pulse, thereby reducing the total energy consumption

According to one advantageous refinement of the apparatus according to the invention, the control unit contains a memory, in which information is stored about the times for delivering stimulation pulses and defibrillation shocks respectively and about the duration and amplitudes of the stimulation pulses and defibrillation shocks in each defibrillation sequence, and a microprocessor which controls said unit for delivering stimulation pulses and said defibrillator circuitry on the basis of stored information. This information is suitably stored in the form of data, programmed by a physician, which are adapted to the condition of each patient. Switching between stimulation pulses and defibrillation shocks is also controlled on the basis of these stored data. Defibrillation sequences start is performed in the same way as in the emission of a shock by a defibrillator according to the prior art.

According to another advantageous embodiment of the apparatus according to the invention, an electrode switching unit is arranged to connect, in an optional manner, one of a plurality of possible electrodes for use as the return electrode for stimulation pulses. Thus, the case of the apparatus or a defibrillation electrode can serve as the return electrode. In this way, current from the stimulation pulses can be returned by different pathways through the heart at different times by shifting the return electrode, or the indifferent electrode, the stimulation pulses thereby covering larger areas.

According to yet another advantageous embodiment of the apparatus according to the invention, the memory contains information about which electrode shall be connected as return electrode, and the microprocessor of the control unit controls the electrode switching unit on the basis of this stored information. The return electrode can be shifted between each stimulation pulse or between groups of such stimulation pulses in the defibrillation sequence.

According to another advantageous embodiment of the apparatus according to the invention, the control unit controls the unit for delivering stimulation pulses and the defibrillator circuitry so a series of stimulation pulses are emitted prior to each defibrillation shock. This produces a refractory area around the stimulation electrode for stopping fibrillation activity there before the actual defibrillation shock is delivered. However, stimulation pulses in each defibrillation sequence can also be emitted between defibrillation shocks or after the same. The duration of a defibrillation sequence is of the order of 1 second.

According to another advantageous embodiment of the apparatus according to the invention, the stimulation electrode is an endocardiac or epicardiac electrode, and the defibrillation electrodes consist of patches, intracardiac electrodes or combinations thereof. The existing pacemaker electrode is used as the stimulation electrode.

According to yet another advantageous embodiment of the apparatus according to the invention, the magnitude of the energy in a high-energy stimulation pulse is of the order of one millijoule. A conventional stimulation pulse, delivered by a pacemaker, has a typical voltage of 10 V, a current of 10 mA and a duration of 1 ms, i.e. the pulse energy typically amounts to 100 μJ. Since the energy in a typical defibrillation shock is of the order of several dozen J, the high-energy stimulation pulses at the invention contain far more energy than conventional stimulation pulses from a pacemaker, but their energy is simultaneously well below the energy in a defibrillation shock.

The invention will now be described below in greater detail with the aid of the embodiment examples shown in the FIGURES.

FIGS. 1 and 2 show parts of defibrillation sequences with different combinations of stimulation pulses and defibrillation shocks, FIG. 3 shows an example of a defibrillation system with the apparatus, according to the invention, implanted in a patient and FIG. 4 contains a block diagram of an example of the apparatus realized according to the invention.

In FIG. 1 a part of a defibrillation sequence with a plurality of high-energy type stimulation pulses 10 preceding a defibrillation shock 12 is shown. FIG. 2 shows a part of a defibrillation sequence with high-energy stimulation pulses 6 before, between and after defibrillation shocks 8. In certain instances, having a number of high-energy stimulation pulses 10 precede the defibrillation shock 12, as illustrated in FIG. 1, may be appropriate, so the high-energy stimulation pulses 10 assure creation of a refractory area around the stimulation electrode before the defibrillation shock 12 is delivered, but, according to the invention, stimulation pulses and defibrillation shocks can be combined in defibrillation sequences in an optional fashion.

The high-energy stimulation pulses have an amplitude and/or pulse duration which greatly exceed the values for conventional stimulation pulses. However, the amplitude and pulse duration of the high-energy stimulation pulses are far less than the corresponding values for defibrillation pulses or shocks.

As illustrated in FIGS. 1 and 2, the time elapsing between the stimulation pulses 6, 10 can also vary. The time between two consecutive stimulation pulses typically constitutes a fraction of the refractory period for a heart cell, i.e. 20 - 200 ms.

Chronological relationships, not solely the pulse magnitude, are important to the impact on a patient's treatment and should be adapted to the patient's condition.

The pulse morphology shown in FIGS. 1 and 2 is only one example, and pulses with numerous other morphologies could obviously be utilized.

FIG. 3 shows an example of a defibrillation system with a pacemaker capability and equipped with the apparatus, according to the invention, implanted in a patient.

The defibrillator itself is shown at 1. Defibrillation pulses are delivered between two patches 2, 3 arranged on either side of the heart 14. Stimulation pulses at a conventional pacemaker operation, like the high-energy stimuwithlation pulses emitted by the apparatus according to the invention, are delivered through the tip 4 of the stimulation electrode to the apex of the right ventricle. So the electrode 4 employed for conventional pacemaker stimulation is used to deliver stimulation pulses generated by the apparatus according to the invention.

A block diagram in FIG. 4 shows a version of the invention with a defibrillator with a built-in pacemaker capability.

The defibrillator therefore contains a pacemaker circuit 16 which delivers conventional pacemaker pulses through the stimulation electrode 4. Further, there is defibrillator circuitry 18 which delivers defibrillation pulses or shocks through two defibrillation electrodes 2, 3 in the known manner. Both these circuits 16, 18 are controlled by a common control unit 20.

There is also an output stage 22 for delivering high-energy pulses to the stimulation electrode 4. The output stage 22 is devised in a way similar to defibrillator circuitry 18. However, it operates with lower voltages, and the energy-storing capacitors for stimulation pulses have a lower capacitance than the capacitors in the defibrillator stage 18.

The control unit 20 contains a memory in which information is stored on the times for delivering stimulation pulses and defibrillation shocks respectively and on durations and amplitudes of the pulses and shocks. The combination of pulses and shocks in each defibrillation sequence is also stored in the memory by programming. The control unit 20 further contains a microprocessor which retrieves requisite information from the memory in order to control the emission of stimulation pulses from the output stage 22 and defibrillation shocks from the circuitry 18.

The start of a defibrillation sequence can be made in the same way as when a defibrillation shock is to delivered by a conventional defibrillator.

Different electrodes, such as patches 2,3 or the defibrillator case 1 itself can serve as return lead for stimulation pulses. So the apparatus contains an electrode switching unit 24 for selecting the return electrode. The electrode switching unit 24 is also controlled by the control unit 20, and information on the electrode to be connected as the return electrode can be stored in the memory of the control unit 20. Here, the electrode switching unit 24 can be controlled so different return electrodes are connected between each high-energy stimulation pulse or between groups of such stimulation pulses in the defibrillation sequence. Such a procedure would be highly advantageous. When shifted between different return electrodes, the pulse current passes through heart tissue by different pathways at different times, so the stimulation pulses reach a larger area.

Thus, the electrode selected by the control unit 20 will be connected by the electrode switching unit 24 to the output stage 22 for returning current from the patient. Switches in the electrode switch-

ing unit 24 suitably consist of transistors. These switch components must be dimensioned to withstand the high voltages a defibrillation shock can generate.

After the defibrillation sequence, the output stage 22 is disconnected from the STIM-connection of the pacemaker circuitry 16, and the return is switched off when the switches in the electrode switching unit 24 assume a high-impedance state.

The STIM connection in FIG. 4 is intended for connection to the stimulation electrode 4 in FIG. 3, the DEFIB connection to the defibrillator case 1, the DEFIB1 connection to the patch 2 and the DEFIB2 connection to the patch 3.

The intracardiac stimulation electrode for the apparatus according to the invention can be endocardiac or epicardiac, and the embodiment exemplified above has defibrillation electrodes in the form of patches. However, intracardiac defibrillation electrodes, or combinations of such electrodes and patches, can be utilized.

Claims

1. An apparatus for producing heart defibrillation sequences formed of stimulation pulses (6, 10) and defibrillation shocks (8, 12), characterized by a unit (22) for delivering stimulation pulses (6, 10) through an intracardiac or epicardiac electrode (4) for pacemaker stimulation, a defibrillator circuitry (18) for delivering defibrillation shocks (8, 12) through defibrillation electrodes (1, 2, 3) and a control unit (20), connected to said unit (22) for delivering stimulation pulses (6, 10) and to said defibrillator circuitry (18) for determining the times for delivering the stimulation pulses (6, 10) and the defibrillation shocks (8, 12).

2. The apparatus of claim 1, characterized in that the control unit (20) contains a memory, in which information is stored on the times for delivering stimulation pulses and defibrillation shocks respectively and on durations and amplitudes of the high-energy stimulation pulses and defibrillation shocks in each defibrillation sequence, and a microprocessor, which controls said unit (22) for delivering stimulation pulses and said defibrillator circuitry (18) in accordance with stored information.

3. The apparatus of claim 1 or 2, characterized in that an electrode switching unit (24) is arranged to connect, in an optional manner, one of a plurality of possible electrodes (1, 2, 3) as the return electrode for stimulation pulses.

4. The apparatus of claim 3, characterized in that the electrode switching unit (24) is arranged to select the apparatus case (1) or one of the defibrillation electrodes (2, 3) as the return electrode.

5. The apparatus of any of claims 2-4, characterized in that said memory contains information on which electrode (1, 2, 3) is to be connected as the return electrode, and in that the microprocessor of the control unit (20) controls the electrode switching unit (24) in accordance with this stored information on the return electrode.

6. The apparatus of any of claims 3-5, characterized in that the electrode switching unit (24) is controlled to connect different return electrodes (1, 2, 3) between each stimulation pulse or between groups of such stimulation pulses in the defibrillation sequence.

7. The apparatus of any of claims 1-6, characterized in that said unit (22) for delivering stimulation pulses is devised in a way similar to the defibrillator circuitry (18) but with energy-storing capacitors whose capacitance is less than that of the corresponding capacitors in the defibrillator circuitry.

8. The apparatus of any of claims 1-7, characterized in that the control unit (20) controls the unit (22) for delivering stimulation pulses to deliver pulses with an interval whose duration is a fraction of the refractory period of a heart cell.

9. The apparatus of any of claims 1-8, characterized in that the control unit (20) controls said unit (22) for delivering stimulation pulses and the defibrillator circuitry (18) to deliver a series of stimulation pulses before each defibrillation shock.

10. The apparatus of any of claims 1-9, characterized in that the intracardiac stimulation electrode (4) is endocardiac or epicardiac, and in that the defibrillation electrodes are so-called patches (2, 3), intracardiac electrodes or combinations thereof.

11. The apparatus of any of claims 1-10, characterized in that the stimulation pulses are formed of high-energy stimulation pulses (6, 10) whose energy is greater than the energy in conventional pacemaker pulses but less than the energy in defibrillation shocks.

12. The apparatus of claim 11, characterized in that the energy in a high-energy stimulation pulse is of the order of millijoule.

FIG 1

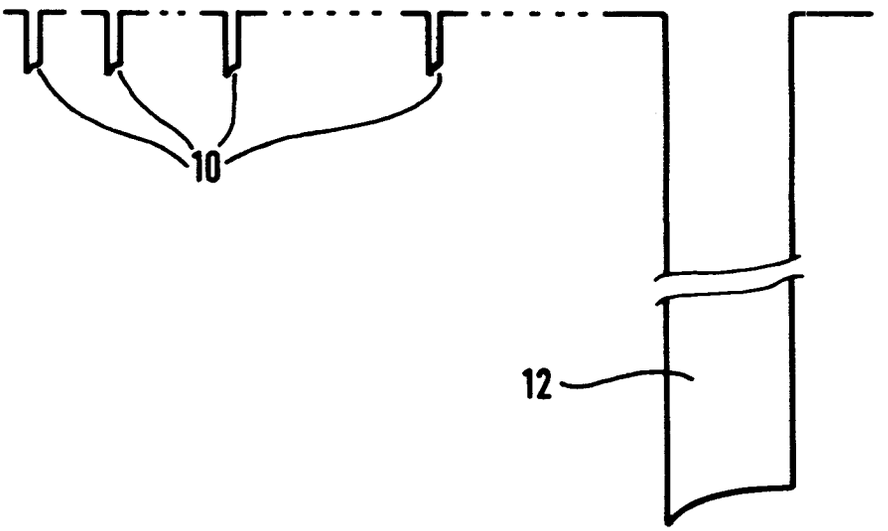

FIG 2

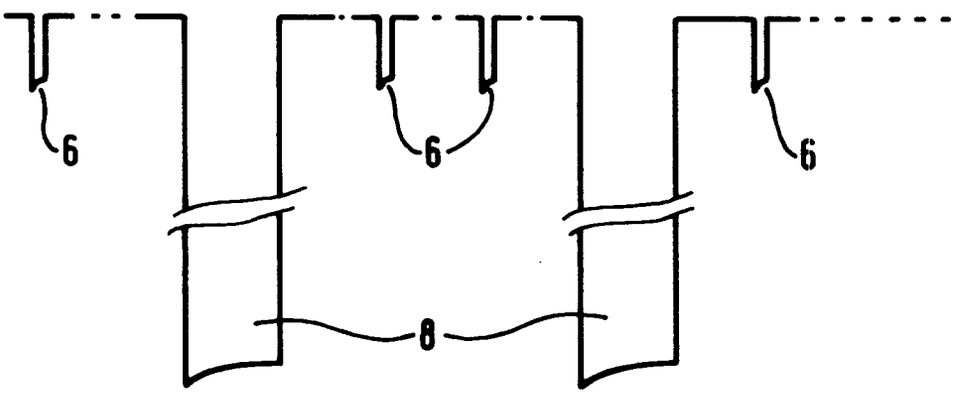

FIG 3

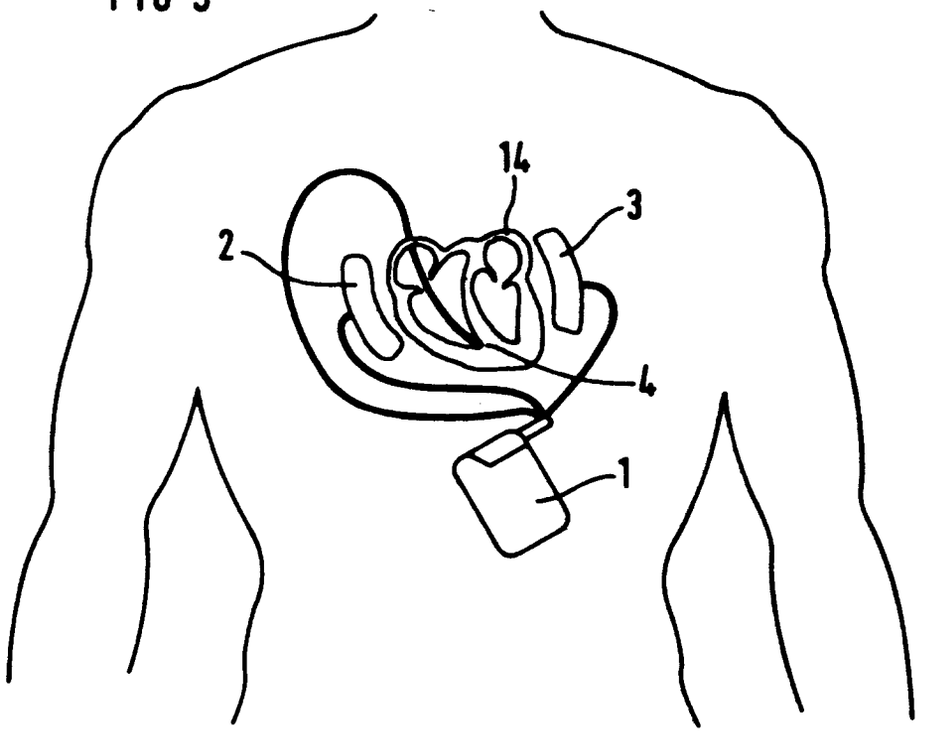

FIG 4

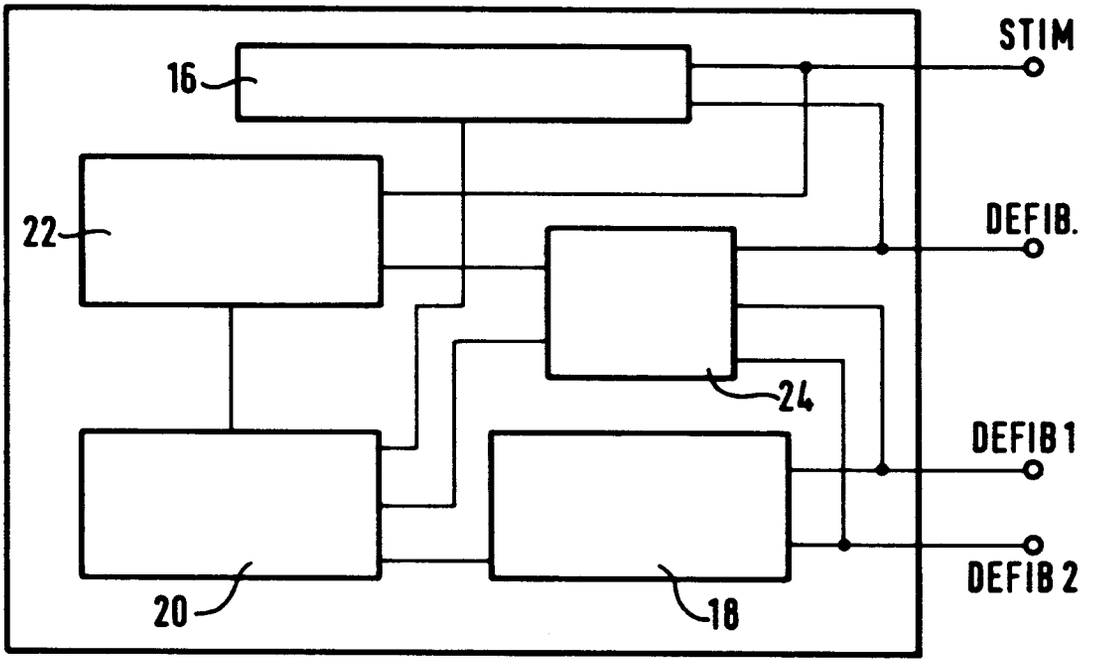

European Patent Office

EUROPEAN SEARCH REPORT

Application Number
EP 93113741.8

DOCUMENTS CONSIDERED TO BE RELEVANT

Category	Citation of document with indication, where appropriate, of relevant passages	Relevant to claim	CLASSIFICATION OF THE APPLICATION (Int. Cl.5)
X	US-A-5 111 816 (B. PLESS ET AL) *Column 2, line 3 - line 25; column 5, line 4 - line 20; column 9, line 28 - line 39; figures 1,2,3; claim 21; abstract*	1,2,8, 10	A61N 1/39 A61N 1/365
Y		3-5	
A		6,7,9, 11,12	

Y	US-A-4 549 548 (F.H.M. WITTKAMPF ET AL) *Column 2, line 32 - line 49; column 3, line 64 - column 4, line 14; column 4, line 28 - line 50; figures 1A,1B; abstract	3-5	

X	US-A-5 105 810 (K.A. COLLINS ET AL) *Column 4, line 32 - column 5, line 53; column 6, line 40 - column 7.line 4; column 7, line 42 - column 8, line 7; figure 3, claim 8; abstract*	1,2,10	TECHNICAL FIELDS SEARCHED (Int. Cl.5) A61N

X	US-A-5 007 422 (B. PLESS ET AL) *Column 1, line 65 - column 2, line 31; column 3, line 3 - line 41; column 4, line 23 - line 33; figure 1; abstract*	1,2,10	

X	US-A-5 063 928 (R. GREVIS ET AL) *Column 5, line 22 - line 55; figure 1; abstract*	1,2	

The present search report has been drawn up for all claims

Place of search	Date of completion of the search	Examiner
STOCKHOLM	06-12-1993	Wihlsson J.

CATEGORY OF CITED DOCUMENTS

X : particularly relevant if taken alone
Y : particularly relevant if combined with another document of the same category
A : technological background
O : non-written disclosure
P : intermediate document

T : theory or principle underlying the invention
E : earlier patent document, but published on, or after the filing date
D : document cited in the application
L : document cited for other reasons

& : member of the same patent family, corresponding document

EPO FORM 1503 03.82 (P0401)