Nov. 17, 1964 H. RUSKIN 3,157,417

EXPANSION PINS

Filed March 26, 1962 2 Sheets-Sheet 1

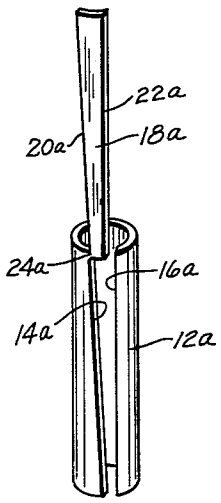

FIG. 1

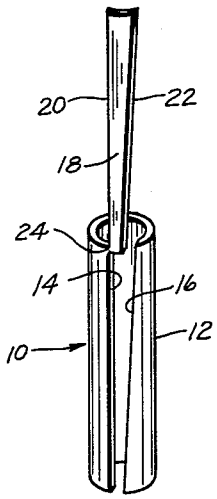

FIG. 2

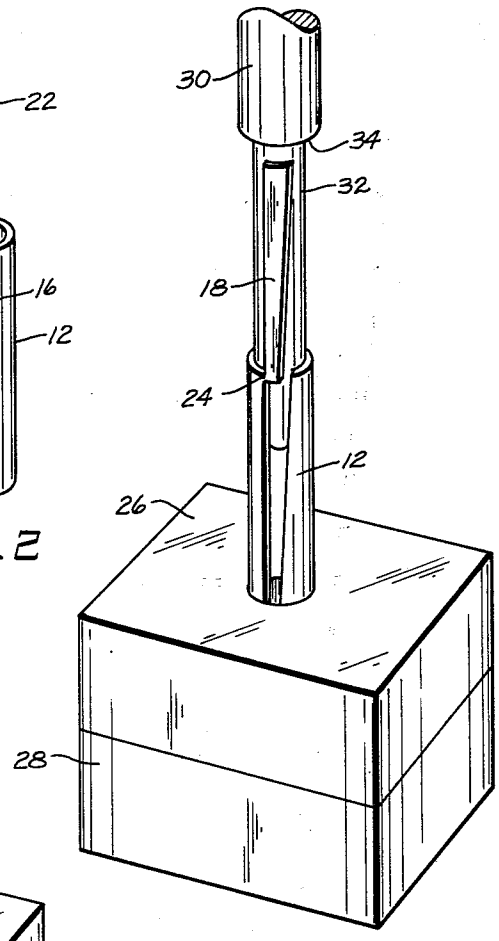

FIG. 3

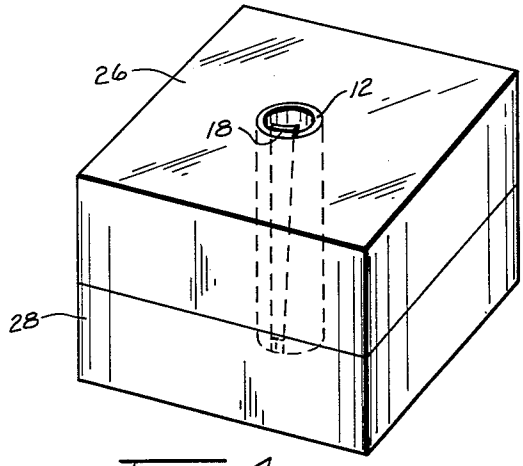

FIG. 4

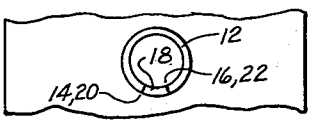

FIG. 5

INVENTOR.
HENRY RUSKIN
BY Paul S Martin
ATTORNEY

Nov. 17, 1964 H. RUSKIN 3,157,417

EXPANSION PINS

Filed March 26, 1962 2 Sheets-Sheet 2

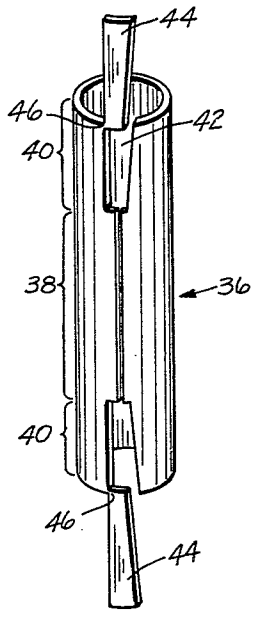

Fig. 6

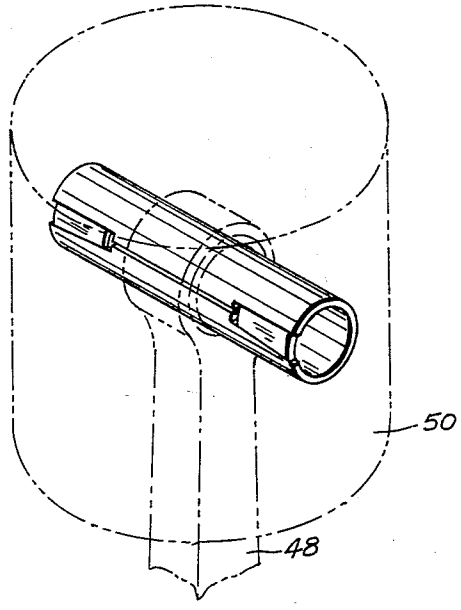

Fig. 7

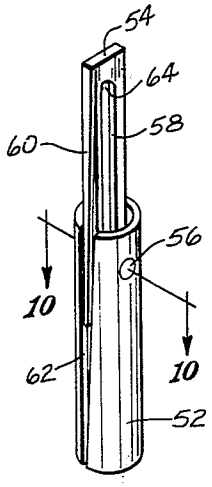

Fig. 8

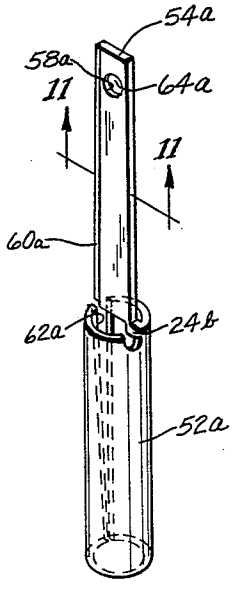

Fig. 9

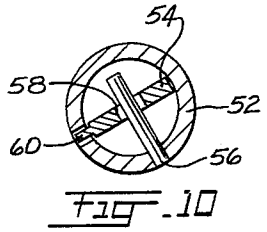

Fig. 10

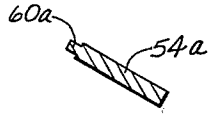

Fig. 11

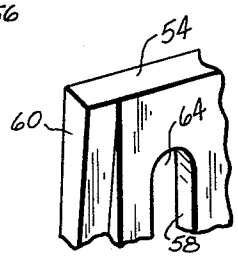

Fig. 12

INVENTOR.
HENRY RUSKIN
BY Paul S Martin
ATTORNEY

United States Patent Office

3,157,417

Patented Nov. 17, 1964

3,157,417

EXPANSION PINS

Henry Ruskin, Bayside, N.Y., assignor to Ruskin Development & Mfg. Corp., Flushing, N.Y.

Filed Mar. 26, 1962, Ser. No. 182,525
5 Claims. (Cl. 287—127)

The present invention relates to metal pins for maintaining fixed or pivotal positioning of two or more parts.

The invention may be explained, for example, in relation to piercing, blanking or forming dies, as an important application. It is similarly applicable in building machines where different parts must be exactly located on a frame or on another part. It is customary to make the die of many sections, and to fasten the die sections to a die shoe by means of screws. It is of extreme importance to establish and hold a critical relationship between the sections of a die. This is commonly achieved by temporarily holding the die sections precisely in their intended positions on the die-shoe, drilling dowel holes through each die section and extending into the die-shoe, and then driving metal dowel pins into the aligned holes through the die sections and into the die-shoe. The dowel pins are made of extremely hard steel. A very tight fit of the dowel pin in the hole, short of a force fit, is usually required. This is achieved by a painstaking operation of matching a ground pin of critical uniform diameter to a hole that is precisely sized and made true cylindrically as by reaming and lapping. A light drive fit of the pin in the hole is required, and because both the metal of the pin and the metal of the die section and die-shoe are virtually non-yielding, the operation of fitting a pin into aligned holes in a die section and die-shoe is an extremely meticulous and time-consuming undertaking, requiring a special skill. Excessive tightness might cause cracking; and both excessively tight and excessively loose pins are cause for rejection of the whole tool. A single die may have thirty or more dowel pins, each requiring meticulous fit.

An object of the present invention resides in the provision of a new form of dowel pin that is to meet the previous standards as to tightness of fit of dowel pins, and yet which will require only a minimum of time and skill in selecting and fitting a pin for a given hole.

Another object of the present invention resides in the provision of a novel dowel pin of adjustable size, capable of being tightly fitted in a cylindrical hole without resort to the precise fitting operations heretofore needed in assemblies of die sections on die shoes.

Another object of this invention resides in the provision of a novel dowel pin or the like, which may be inserted with relative ease. A further object resides in providing a pin that may be inserted and removed in a situation where only one end of the bore is accessible. The latter object will be better appreciated when it is realized that conventional dowel pins may be removed from a die section and die-shoe only by cautiously lifting the assembly to provide access to the rear of the assembly so that any particular pin can be driven out.

A still further object of the invention resides in the provision of a novel pin that is adapted for relatively easy removal despite its extremely tight fit in the hole that receives it.

A still further object related to the foregoing resides in a novel method of holding assembled parts in precise, predetermined positions, each in relation to the others, and a further related object resides in a novel method of inserting multi-part pins.

The foregoing objects and features of the invention are achieved by means of a novel type of pin which, in its preferred form, includes a body in the form of an incomplete or split tube or cylinder having confronting

longitudinal edges, and a wedge to be driven between those confronting edges so as to flex and expand the body into the desired tight fit against the wall of the hole or aligned holes that receive the pin.

Another object of the invention resides in the provision of a novel two-part adjustable pin having companion tapered parts which are held together in captive assembly prior to use. This feature of the invention is important for several reasons. Each wedge is held in proper initial orientation for insertion into its companion body portion of the pin. Where the taper of the wedge is small, it may not be easy to recognize the narrow end of the wedge; and this is obviated by providing a captive connection that maintains the proper mutual relationship of the parts of the pin. Second, because of this feature, there is no need for care in avoiding possible mismatch between wedges and companion split-cylinder body portions to be used together, where there may be a supply of different sizes and styles of multi-part pins. Another advantage of the captive assembly of the wedge to the body portion is that insertion of the pin is facilitated, as will be more fully understood from the drawings and detailed description below.

The composite tubular pins described below have essentially true outer cylindrical surfaces, for face-to-face contact with the wall of a corresponding cylindrical hole, as is required in die-fabrication practice. However, in other applications, the outer surface of the pin may be roughened, toothed, threaded or otherwise figured for special advantage in each application involved.

The nature of the invention, including the foregoing objects and features as well as others, will be more fully appreciated from the following detailed description of the presently preferred embodiments which are shown in the accompanying drawings. In the drawings:

FIGS. 1 and 2 are enlarged perspective views of slightly different dowel pins embodying features of the invention;

FIG. 3 is an enlarged perspective view of the dowel pin of FIG. 2 in the process of being inserted in a diagrammatically illustrated die section and die-shoe;

FIG. 4 is a perspective view of the dowel pin of FIG. 2 after completion of the inserting operation illustrated in FIG. 3;

FIG. 5 is a fragmentary top-plan view of the dowel pin assembly in FIG. 4, drawn to larger scale;

FIG. 6 is a perspective view of another modification of the invention;

FIG. 7 is a perspective view of a pin of the form in FIG. 6 following insertion, the parts with which the pin is assembled being shown in phanton lines;

FIGS. 8 and 9 are enlarged perspective views of two additional forms of dowel pins involving further aspects of the invention;

FIG. 10 is a transverse cross-section of the dowel as viewed from the section line **10—10** in FIG. 8, drawn to large scale;

FIG. 11 is an enlarged cross-section of a portion of the dowel pin as viewed from the line **11—11** in FIG. 9, drawn to larger scale; and

FIG. 12 is an enlarged view of a portion of the wedge in FIG. 8.

Referring now to the drawings, and particularly to FIGS. 2–5, inclusive, a dowel pin **10** is shown in FIG. 2 in its initial condition, prior to use. In this form, pin **10** includes a body portion **12** in the form of a nearly complete cylinder having confronting substantially straight longitudinal edges **14** and **16**. Edge **14** is parallel to the axis of cylinder **12**, while edge **16** slants slightly so that the space between edges **14** and **16** diverges toward the top of body portion **12**.

Wedge portion **18** has opposite longitudinal edges **20**

and 22. The narrowest portion of wedge 18 is disposed in the top part of the space between edges 14 and 16, so that the bottom of the wedge extends slightly below the top of body portion 12 of the pin. Edge 20 is parallel to the axis of the cylinder 12 and edge 22 diverges upward. This divergence is preferably at a very small angle, for example one degree in a typical dowel pin used for locating a die section on a die-shoe. The divergence of edges 14 and 16 is the same, so that wedge 18 is complementary in shape to the space between edges 14 and 16.

The wedge is secured to the body of the pin by narrow connecting neck 24. This neck may be weakened by a fine groove or in other suitable manner, if desired. The outer surface of wedge 18 (the large surface of wedge 18 that is exposed to view in FIG. 2) has the same convex cylindrical curvature as that of body 12. This may be assured by centerless grinding, with the parts of the pin supported on an inserted rod.

Body 12 and wedge 18 are formed of sheet-metal, these two parts being integrally connected by a neck 24. Accordingly, body 12 is hollow and has coaxial inner and outer surfaces.

The pin of FIG. 2 is inserted into aligned holes in a die section and die-shoe in the manner diagrammatically illustrated in FIG. 3. Body 12 is initially inserted into aligned holes in members 26 and 28. Member 26 is one section of a die, and member 28 represents the usual die-shoe. Body portion 12 preferably has a sliding fit in this hole, and gentle pressure is sufficient to slide the body portion 12 to the bottom of the hole. The length of the body equals the combined thicknesses of the die section and the die-shoe, in this application of the pin.

With body 12 fully inserted and supported at its lower end, the narrowest end of the wedge 18 extends a short distance into the hole in member 26. A punch 30 having a pilot portion 32 may be used to support body 12 and aid in its insertion. When body 12 has been inserted, pilot portion 32 of the punch extends into the space within body 12. The outer diameter of pilot portion 32 is substantially equal to the inner diameter of body portion 12. A shoulder 34 of the punch is pressed against the top of wedge 18, while the wedge is laterally supported by pilot portion 32. A hammer blow on punch 30 is then effective to rupture connecting neck 24. The pin, including body portion 12 and wedge 18, are of very hard steel, so that wedge 18 has almost no tendency to bend. Consequently, the constricted connection represented by neck 24 readily breaks under impact. Tool 30 guides and pushes wedge 18 until the edges of the wedge bear against the companion edges of cylindrical body 12. Thereafter, further light blows on punch 30 (or a substitute punch with a shorter pilot portion 32) are effective to force the wedge further along body portion 12. The wedge and the body 12 are proportioned so that, as this driving operation proceeds, edges 14 and 16 are forced to spread slightly. This action expands the body portion 12. The body thus remains cylindrical but assumes a larger diameter as it is expanded by the wedge. The wall of body 12 has the necessary resilience for such expansion. When the wedge is driven as far as necessary for the desired tightness of fit, body portion 12 presses outward in virtually all directions into firm pressure engagement with the wall of cylindrical holes in members 26 and 28. In its completely inserted condition, composite pin has substantially the same characteristics such as rigidity and resistance to being shifted out of place as a properly fitted dowel pin.

Edges 14, 16, 20 and 22 have substantially radial surfaces, as represented in FIG. 5 and as a result the driven engagement of the wedge 18 into the space provided for the wedge tends to force the wedge radially outward. Accordingly, the outward pressure of the body 12 against the wall of the hole is supplemented by the outward pressure of the wedge 18. This effect is desirable, of course. However, and perhaps a more important aspect of this relationship between wedge 18 and body 12 is that there is no tendency of the wedge to slip radially inward, into the hollow of body 12. The radial disposition of companion surfaces 14, 20 and 16, 22 is effective to hold the wedge captive in the position to which it is driven as shown in FIG. 5.

The impact required in driving the wedge into position for extremely tight pressure of the body portion 12 against the walls of the holes in members 26 and 28 requires mere taps of a hammer, in contrast to much more positive blows that are required to drive solid pins into a die section and die-shoe with the necessary tightness of fit. In previous practice, it was not uncommon for a hardened pin to fracture under the impact of a hammer blow. One consequence was the hazard of fragment of the pin flying with bullet-like speed. Serious injuries have been caused in this way. This hazard could be reduced by wrapping the projecting part of the conventional pin in cloth while it was being driven. In any event, there has been a certain incidence of broken pins, and when that occurred, it was necessary to remove the remaining part of the pin from the hole and to start all over again with matching a pin to the hole. Because of the relatively light impact involved in driving the wedge into the body 12, the foregoing difficulties connected with previous solid dowel pins are largely eliminated.

As seen in FIG. 4, wedge 18 when inserted in a typical manner projects a short distance above the upper end of body 12, and terminates a short distance above the bottom of the hole. This would allow further drive of the wedge if necessary. Disregarding this detail, the wedge extends substantially all along body portion 12 when inserted. As a result of the described relationship between the wedge and the body portion, there is virtually uniform pressure directed outward against all areas of the holes in members 26 and 28, at all points along the axis of the pin and in all radial directions.

It is evident that the arcuate extent of wedge 18 may be increased and that of body 12 might be correspondingly decreased, and this could be carried to the extreme condition in which both parts would become slightly greater than half-cylinders, each being resilient and each having diverging edges as in FIG. 2. When driven into wedged assembly, each such member would be expanded by the other so as to bear everywhere against the wall of the hole that receives them. However, the preferred proportions of the pin body and wedge, as to arcuate extent, are shown in the drawings.

FIG. 1 illustrates a dowel pin very similar to that in FIG. 2. In FIG. 1, body 12*a* and wedge 18*a* are connected by a neck 24*a*. Confronting edges 14*a* and 16*a* are complementary to the lateral edges 20*a* and 22*a* of the wedge. However, whereas edges 14 and 20 in FIG. 2 are parallel to the cylindrical axis, edges 14*a* and 20*a* have the small-angle slant described in connection with edges 16 and 22 of FIG. 2. Otherwise, the embodiment of FIG. 1 is in all respects the same as the embodiment in FIG. 2.

FIG. 6 shows another form of drive pin resembling that of FIGS. 1 and 2, and FIG. 7 shows the pin of FIG. 6 in an application different from that in FIGS. 3, 4 and 5. In FIG. 6, longitudinally slit cylindrical pin 36 has a central body portion 38 and two end body portions 40. Spaces 42 in end portions 40 are defined by longitudinal edges that are substantially straight and which diverge toward the respective ends of pin 36. Wedges 44 are slightly shorter than spaces 42, and have lateral edges which are substantially straight and which have the same diverging angle as spaces 42, the edges and the spaces having other details described in connection with FIG. 2. A readily fracturable neck 46 connects each wedge 44 to its associated body portion 40.

Wedges 44 and body portions 38 and 40 of pin 36 are all of integral construction, formed of sheet-metal, hardened, and having a cylindrical external surface. Wedges 44 may be driven into their respective spaces 42 in instal-

ling pins 36, in generally the same manner as described above in connection with FIG. 3. The application of pin 36 represented in FIG. 7 shows center portion 38 of pin 36 received in a bushing in connecting rod 48, while end portions 40 are fixed in the opposite walls of a hollow piston 50 of an internal combustion engine. The center portion 30 of pin 36 is a pivot-pin that is relatively rotatable in the bushing of connection rod 48, but the end portions 40 with the driven wedges 44 are retained with force-fit tightness in the piston walls. The expanded-cylinder surfaces bear against the hole with distributed pressure all along and around the hole.

The wedges in FIGS. 1, 2 and 6 are connected to the body portions of the pins by necks. Assurance is thus provided that the wedges are properly oriented in relation to the respective spaces that are to receive those wedges, and assurance is also had that each wedge is the correct size and has the correct taper for the companion wedge-receiving space. Thus, the method of inserting the pin as illustrated in FIG. 3 might not be utilized, and each wedge may be broken away from its body portion immediately prior to actual use. The initially established relative orientation and the proper pairing of each wedge and its companion body portion are ample justification for the captive connection that is provided between each wedge and its body portion.

FIG. 8 illustrates another dowel or drive pin embodying further aspects of the invention. Cylindrical body portion 52 receives a member 54 across its diameter (FIG. 10). Pin 56 is fixed in the wall of body 52 and extends in a slot 58 along most of the length of member 54. A wedge portion 60 whose opposite walls diverge upward as viewed in FIG. 8 extends along a longitudinal edge of member 54 and this is received in the space 62 in body 52. Wedge portion 60 and space 62 are related to each other in largely the same manner as wedge 18 and body 12. However, the driving surfaces of wedge portion 60 and the confronting edges of space 62 with which wedge portion 60 cooperates need not have the radial attitudes of edges 14, 20 and 16, 22 represented in FIG. 5. Wedge portion 60 is retained in the space 62, against a tendency to shift radially inward by that part of member 54 disposed in the hollow of body 52, and wedge portion 60 is thus reliably retained in the intended position.

The embodiment in FIG. 8 utilizes pin 56 in place of the integral neck connection 24 of FIG. 2, for the purpose of retaining the wedge and the body in captive assembly to each other, both to insure proper match of a wedge and its companion body, and to insure proper orientation of the wedge in the wedge-receiving space of body 52. The upper end 64 of slot 58 has an additional function. After the wedge has been driven sufficiently into space 62 and body 52 is thereby expanded tightly into a hole, it may be necessary to remove the composite pin consisting of body 52 and wedge member 54. This may be effected by inserting a hook under shoulder 64 and withdrawing the wedge. After the wedge has been withdrawn sufficiently, the resilience of body portion 52 reduces the diameter of body 52, compared to its expanded condition when the wedge is inserted, and body 52 can then be readily slipped out of the hole.

A further embodiment of the invention is illustrated in FIGS. 9 and 11. Replacing pin 52 of FIG. 8, the embodiment in FIG. 9 utilizes a connecting neck 24*b* corresponding to neck 24 in FIG. 2; and like FIG. 8, the embodiment of FIG. 9 has a body portion 52*a*, a wedge 60*a*, a member 54*a* that extends across the inner diameter of member 52*a*, and a wedge portion 60*a* that is received in the space 62*a* in body 52*a*. Hole 58*a* in member 54 forms shoulder 64*a* that may be engaged by an appropriate tool when it is necessary or desirable to remove the wedge and body 52*a* after insertion. The details of the parts bearing the "*a*" numerals in FIG. 9 correspond essentially to the details of the parts in FIG. 8 bearing the same numbers and consequently those details are not here repeated.

In each of the embodiments above, there is included a thin-walled hollow body that is an incomplete cylinder and has a wedge-receiving space defined by confronting longitudinal edges that diverge toward one end of the cylindrical body. Advantageously, in each instance the body is formed of sheet-metal, and it is made of a metal such as steel that is hardened after being properly shaped. The cylindrical body is of a size chosen to slide into the hole that is to receive the pin, and the wedge is proportioned to be received between the diverging edges of the body portion and, when driven in place, to expand the outer cylindrical surface of the body into pressure contact, everywhere, with the wall of the hole that receives the pin. This enlargement of the outside curvature of the body portion into pressure contact everywhere with the bore wall, including substantially continuous contact circumferentially, is a result that lends significance to the thinness of the wall. This is related to the resilience of the wall and its capacity to be flexed, so that the wall thickness will vary with different materials. It is understood that the proportions of the body portion are to be related to provide for expansion of the outer cylindrical surface of the body portion in a bore by a driven wedge, as already mentioned. In each embodiment, the wedge portion and the companion body portion of the pin are secured in assembly, in their properly oriented condition preparatory to use. Further, some means is provided in each embodiment for resisting displacement of the wedge radially inward, out of the wedge-receiving space.

The novel pins have been found remarkably strong and effective for the purposes described. They are well suited to resist vibration, as demonstrated by test assemblies of parts having novel pins, and subjected to prolonged tumbling. They are well suited to replace so-called roll pins in many applications and the novel pins have characteristics enabling their use in some applications (such as in assembling dies) where roll pins are considered unacceptable.

While the foregoing detailed description explains various significant aspects and features of the invention, it will be apparent that those skilled in the art will be able to make varied modifications and will find a variety of applications of the novel features involved. Consequently, this invention should be broadly construed in accordance with its full spirit and scope.

What is claimed is:

1. A multi-part pin including a body and a wedge, said body being in the form of a hollow cylinder of sheet-metal having a slit extending from end to end, the edges forming said slit having a small angular separation and diverging at a small angle toward an end of the cylinder, said wedge including a longitudinally tapered portion receivable between said edges and adapted to expand said cylinder when driven between said edges, the wall of said body being sufficiently thin and resilient so as to have its radius of curvature enlarged when the wedge is driven between said edges, said wedge including a further portion that is proportional to extend from said tapered portion diametrically across the cylindrical axis and into contact with the inside surface of the cylinder at least at an area along the length of the wedge opposite said slit edges when said tapered portion is received between said slit edges so as to prevent the tapered portion from becoming displaced from between said slit edges and shifting into the hollow of the cylinder.

2. A pin in accordance with claim 1, wherein said further portion of the wedge has a shoulder adjacent the widest end of said tapered portion, said shoulder being engageable by a wedge-removing tool.

3. A pin, including a thin-walled hollow cylinder of metal having a slit extending from end to end, the edges forming said slit having a small angular separation, the

space between said edges being widest at the end thereof nearest an end of the cylinder and said space being progressively narrower along the cylinder, a metal wedge complementary to said space and adapted to expand the cylinder when driven into said space, the wall of the hollow metal cylinder being sufficiently thin and resilient to have its radius of curvature enlarged when the wedge is driven into said space, and an element extending from said wedge across the hollow cylinder to the inside surface thereof opposite said slit edges, said element being engageable with said surface at least at such an area along the length thereof so as to block radially inward displacement of said wedge.

4. A pin in accordance with claim 1, wherein said diametrically extending portion has a longitudinal slot and wherein said cylinder has a transverse element extending into said slot for retaining the wedge and the cylinder in assembly.

5. A pin in accordance with claim 3, wherein said wedge and said cylinder have an integral interconnecting portion that is relatively constricted and fragile.

References Cited in the file of this patent

UNITED STATES PATENTS

1,139,712	Osborne	May 18, 1915
1,567,713	Corser et al.	Dec. 29, 1925
1,810,749	Bowler	June 16, 1931
2,102,230	Waterman	Dec. 14, 1937
2,440,038	Baker	Apr. 20, 1948
2,650,115	Taylor	Aug. 25, 1953
2,870,666	Dempsey	Jan. 27, 1959
2,901,787	Whistler et al.	Sept. 1, 1959

FOREIGN PATENTS

1,152,258	France	Sept. 2, 1957