(No Model.)

J. A. BALDWIN.

LATCH.

No. 403,173. Patented May 14, 1889.

Fig. 1.

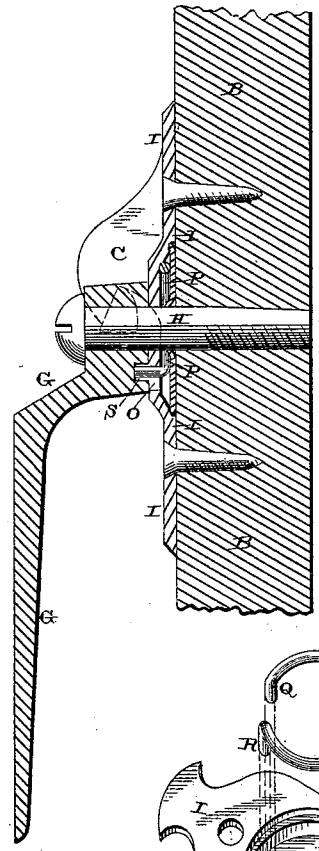

Fig. 3.

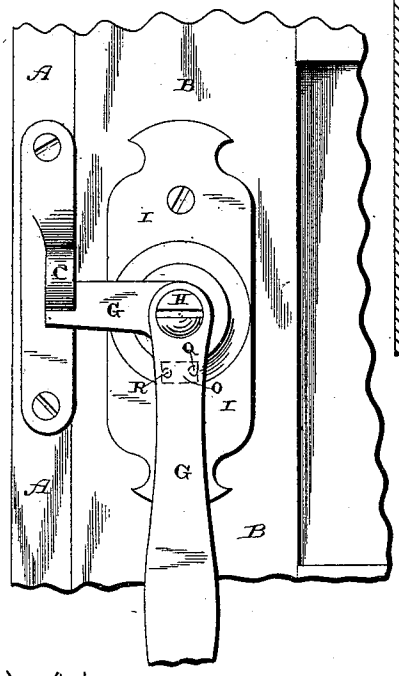

Fig. 2.

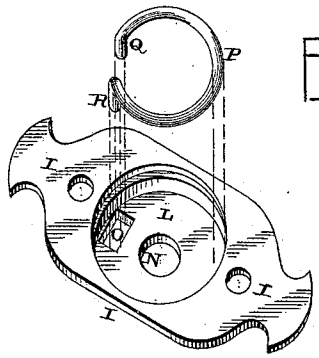

Witnesses:

E. P. Ellis,

Allen S. Pattison

Inventor:

J. A. Baldwin,

per C. E. Allen,

Atty.

N. PETERS. Photo-Lithographer, Washington, D. C.

UNITED STATES PATENT OFFICE.

JUDSON A. BALDWIN, OF WINOOSKI, VERMONT.

LATCH.

SPECIFICATION forming part of Letters Patent No. 403,173, dated May 14, 1889.

Application filed October 27, 1888. Serial No. 289,304. (No model.)

To all whom it may concern:

Be it known that I, JUDSON A. BALDWIN, a citizen of the United States, residing at Winooski, in the county of Chittenden and State of Vermont, have invented a certain new and useful Improvement in Door-Fasteners, of which the following is a specification, reference being had therein to the accompanying drawings.

My invention relates to an improvement in door-fasteners; and it consists in the combination of the plate, which is applied directly to the door, and which has a recess formed upon its inner side to receive the spring and an opening through which the turned-out end of the spring extends, with a cam-shaped locking-lever which is pivoted upon the plate by a bolt which extends through both the lever and the plate into the door, and the hook which is secured to the jamb of the door, as will be more fully described hereinafter.

The object of my invention is to provide an automatically-acting door-fastener for doors, gates, and covers of all kinds, and which will hold the door, gate, or cover tightly closed, so as to prevent any possibility of its becoming loose or rattling, and which will cause the door to form a tight joint with the door-frame.

Figure 1 is a vertical section of a door-fastener which embodies my invention. Fig. 2 is a perspective of the plate which is applied to the door and the spring. Fig. 3 is a front view of the fastener complete.

A represents the frame-work, and B the door, which is hinged thereto in the usual manner. Secured to the frame-work is the keeper C, which has its inner surface where it engages with the locking-lever inclined, as shown in dotted lines in Fig. 1, so as to correspond to the inclined or beveled outer face of that portion of the locking-lever G which engages with it. These two meeting surfaces are made inclined, as shown, so as to force the door shut with all the force of the spring which operates the lever, and thus prevent any possibility of the door from being loosely held. This construction of the parts is especially desirable in refrigerators and other doors where the door must be held tightly closed to prevent any passage of air back and forth from the refrigerator. If a fastening device of this kind is applied to a gate, it will prevent the gate from rattling or have any movement whatever. The locking-lever G is made L-shaped, as shown, and is pivoted upon the bolt H, which passes through the lever and the plate I, which is secured to the door, and into or through the door itself. The lower end of the lever projects downward any desired distance, so as to give sufficient leverage to enable the lever to be easily operated; but the direction in which the handle portion of the lever extends is immaterial.

Secured directly to the door is the plate I, which has a suitably-shaped recess, L, in its under side, and extending through the plate is the central opening, N, through which the pivotal bolt passes, and the opening O, to one side of the center, through which the longer of the turned-out ends of the spring P extends. This spring P is given the shape corresponding to the shape of the recess in which it is placed, and its two ends are turned outward, so as to catch in the opening for the purpose of holding the spring in position. The shorter end, Q, of the spring merely catches in the opening, while the longer end, R, extends through the opening and catches in a recess, S, formed in the inner side of the lever. The whole tension of the spring is exerted after the lever has been moved in returning it to position. The length of the opening through which this turned-out end of the spring extends is made of such a length that it can only move the upper locking portion of the lever into a horizontal position, and hence this portion of the lever is always held in such a position that it engages with the hook when the door is closed. This locking portion of the lever being beveled upon both of its sides, and the lever being spring-actuated, it is only necessary to force the door shut, when it will automatically latch.

It is immaterial whether the keeper is fastened to the door or the frame, and it is not absolutely necessary that the recess should be formed in the inner side of the plate. If a corresponding recess is formed in the door to which it is applied, the recess in the plate may be dispensed with; but it is most convenient to form it in the plate, because then a latch is produced which is ready to be ap-

plied to any door or gate without the help of any other tool than a screw-driver.

Having thus described my invention, I claim—

The combination of the keeper, the locking-lever, the pivotal bolt, the plate provided with an opening, and the spring having a turned-out end and made to project through the opening and to catch in a recess in the inner side of the lever, substantially as shown.

In testimony whereof I do affix my signature in presence of two witnesses.

JUDSON A. BALDWIN.

Witnesses:

CHARLES E. ALLEN,
ELMER E. DAVIS.