Jan. 17, 1967 J. H. LEMELSON 3,298,883

METHOD OF MAKING BUILDING PANELS

Filed May 1, 1963 2 Sheets-Sheet 1

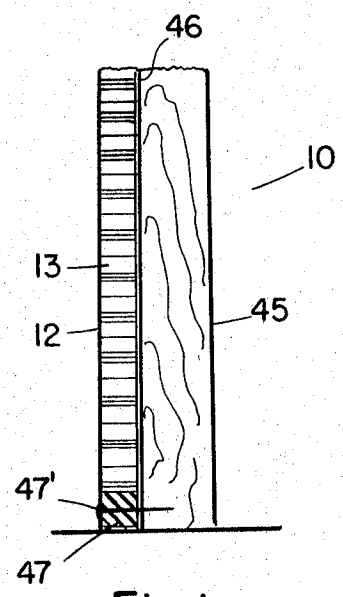

Fig. 1

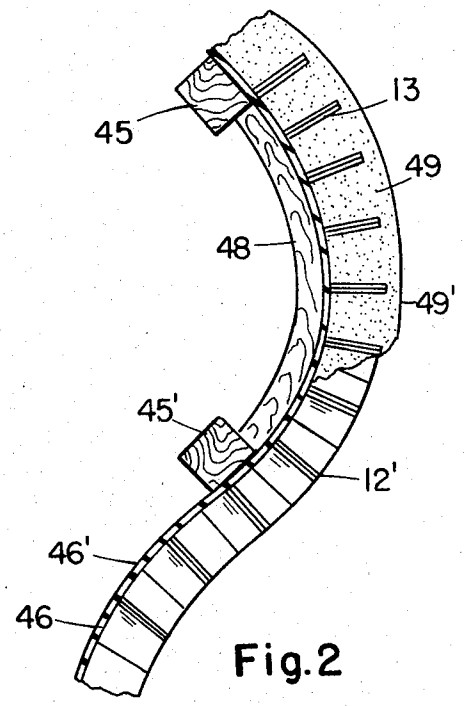

Fig. 2

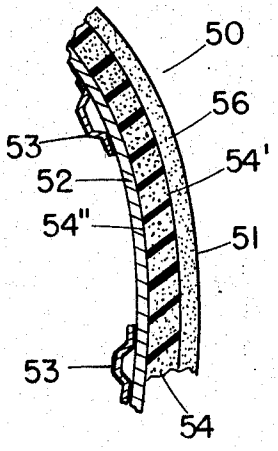

Fig. 3

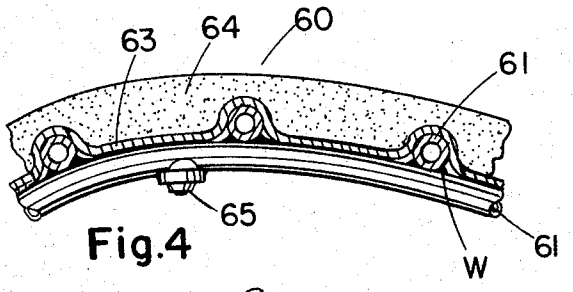

Fig. 4

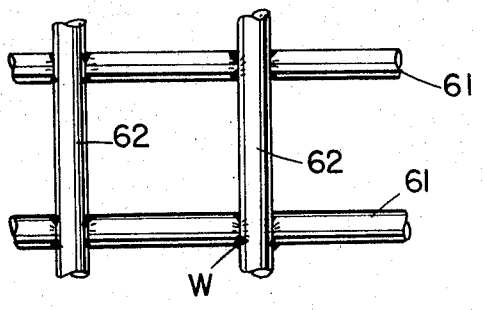

Fig. 5

INVENTOR.
Jerome H. Lemelson

Jan. 17, 1967 J. H. LEMELSON 3,298,883

METHOD OF MAKING BUILDING PANELS

Filed May 1, 1963 2 Sheets-Sheet 2

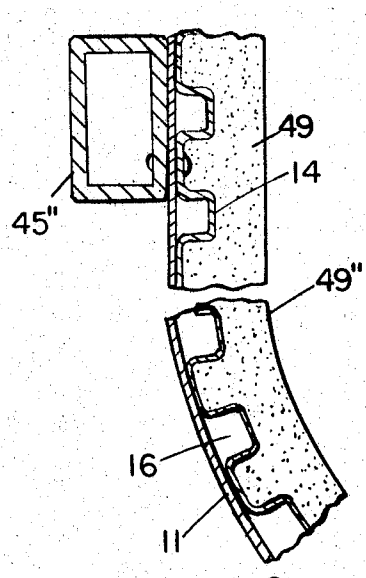

Fig.6

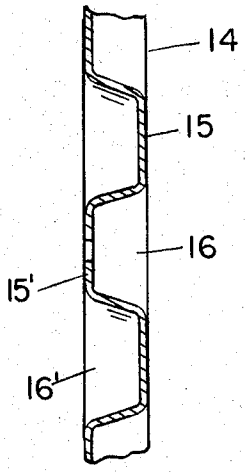

Fig.7

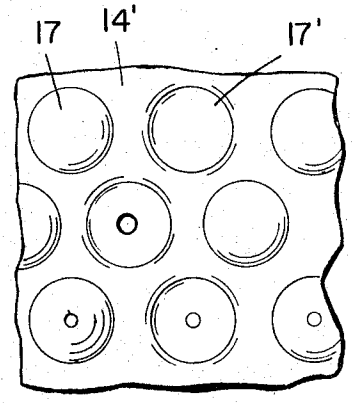

Fig.8

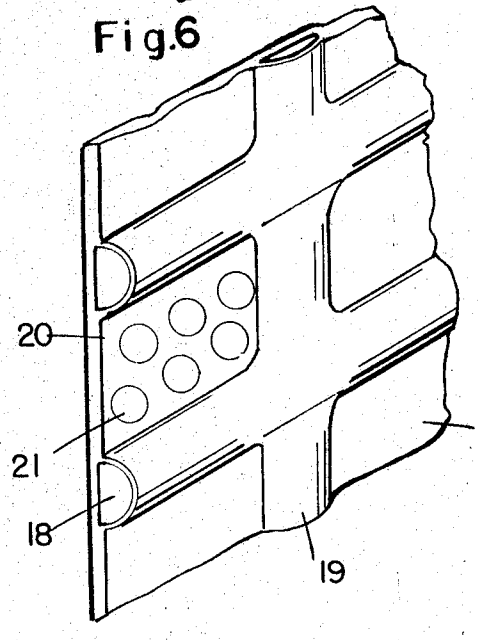

Fig.9

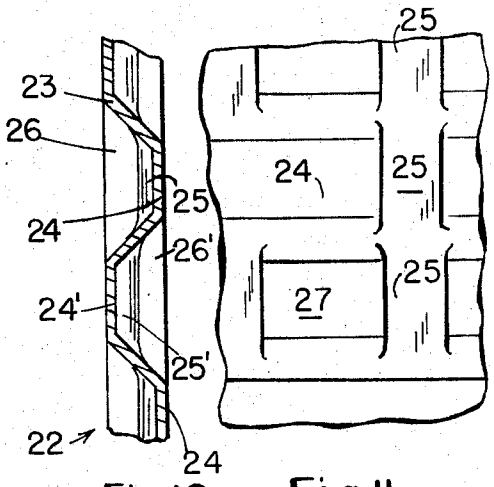

Fig.10 Fig.11

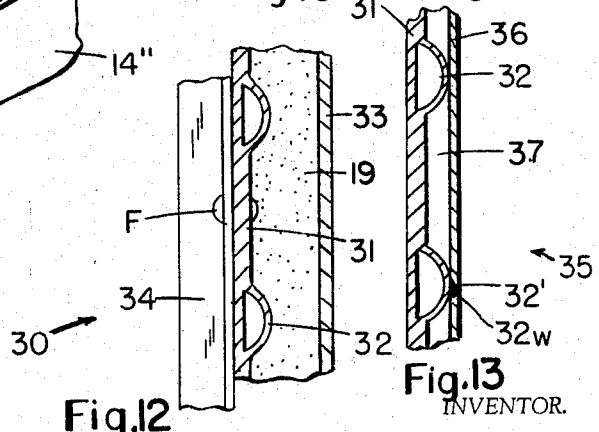

Fig.12 Fig.13

INVENTOR.

Jerome H. Lemelson

United States Patent Office 3,298,883 Patented Jan. 17, 1967

3,298,883

METHOD OF MAKING BUILDING PANELS

Jerome H. Lemelson, 85 Rector St.,
Metuchen, N.J. 08840

Filed May 1, 1963, Ser. No. 277,340
13 Claims. (Cl. 156—71)

This invention relates to an improved method of fabricating a wall panel and to the panel structure itself and is a continuation-in-part of my copending application Serial No. 555,146 for panel construction which was filed on December 23, 1955, now abandoned.

It is frequently desirable to construct a well, ceiling or partition with a curved surface. Such a panel is not only desirable to enhance the appearance of an architectural form such as a wall, it is also frequently superior in strength to that of a flat or planar wall member and may provide for the conservation of space or serve other useful functions. The conventional method of fabricating a curved ceiling or wall structure is to provide a complex frame-work of wood or other suitable material and then define a curved surface approximately the shape of the surface of the wall to be fabricated by fitting together either a multitude of individual surface members such as pieces of wood planking or the like. The conventional curved wall or ceiling panel is thus relatively complex and difficult to fabricate, hence it has not had substantially wide application in relatively low cost building structures such as in dwellings and the like.

It is accordingly a primary object of this invention to provide a new, improved and relatively simple method for fabricating a wall or wall panel.

Another object is to provide an improved method for fabricating a curved wall or wall panel in which a lattice-like skeletal wall member such as a honeycomb panel member or other suitable lattice member is supported in a predetermined attitude or shape and is utilized as means for supporting other materials including a bulk material such as cement or bulk mortar which may be rapidly applied by spraying or other means.

Another object is to provide an improved method of rapidly fabricating and erecting one or more wall panels to define a shelter or building structure.

Another object is to provide a means for fabricating a curved wall or ceiling panel with a minimum number of component parts and a minimum number of assembly operations.

Another object is to provide a method of fabricating a rigid wall panel of irregular or curved shape by employing a supported flexible foamed member as a base, applying a rigid material thereto in fluent form and allowing said material to solidify in place.

Another object is to provide improved panel structures utilizing cellular plastic, glass or ceramic as a component thereof.

Another object is to provide an improved architectural panel and method of producing same by employing a deformed metal sheet as a base on which to apply a building mortar or cement.

Another object is to provide new and improved structures in wall panels made of a plurality of different materials and utilizing characteristics of each, not only to enhance the appearance and physical characteristics of the panel but also to permit simplification of the construction of the panel and fastening thereto.

With the above and other such objects in view as may hereinafter more fully appear, the invention consists of the novel construction, combination and arrangement of parts as will hereinafter be more fully described and illustrated in the accompanying drawings, but it is to be understood that changes, variations and modifications may be

resorted to which fall within the scope of the invention as claimed.

In the drawings:

FIG. 1 is a side view with parts sectioned for clarity, of a wall panel structure prior to completion;

FIG. 2 is an end view with parts broken away for clarity of the panel of FIG. 1 in a further stage of development;

FIG. 3 is an end view in cross section of a fragment of a wall panel employing a cellular plastic portion;

FIG. 4 is a cross sectional view of a panel employing a lattice-like array or tubes for support and heat transfer purposes;

FIG. 5 is a plan view of the tube arrangement of FIG. 4;

FIG. 6 is a cross sectional view of segments of a composite wall panel employing a deformed sheet of metal as a base;

FIG. 7 is a fragmentary view of the deformed metal sheet of FIG. 6 showing details thereof;

FIG. 8 is face view of another type of deformed metal sheet which may also be made of plastic and is applicable to the structure of FIG. 6;

FIG. 9 is an isomeric view of a fragment of a deformed metal sheet applicable to the panel of FIG. 6 and having conduit portions for heat transfer functions relative to the panel;

FIG. 10 is an edge view of a form of corrugated sheet applicable to the panel structures of this invention;

FIG. 11 is a plan view of a face of the sheet of FIG. 10;

FIG. 12 is a cross sectional view of a panel using the sheet of FIG. 9; and

FIG. 13 shows in end cross section another structure in a panel applicable to the various other structures or utilizable per se.

There is shown in FIGS. 1 and 2 structural details of a curved wall panel which may be fabricated by the improved method to be described hereafter. Referring first to the structure of the panel, the assembly **10** includes a first panel member **12** which may comprise a flexible array of self supporting elements **13** which may comprise any suitable assembly of strips or bars defining a lattice. In FIG. 2, the lattice panel **12** is shown as comprising a plurality of strips **13** which are shaped or deformed and joined together to define a honeycomb structure. Various types of lattice structures and honeycomb constructions are known in the art, many of which are capable of being flexed or curved without fracturing or permanently deforming the individual elements of the panel. For example, most metal or plastic impregnated paperboard honeycomb structures may be curved or deflected to define a cylindrical or dome-like panel if bent or deflected in at least one direction and will assume a convex bow-like shape if urged in bending in the other direction. Either shape may be used to advantage in architectural structures such as wall or ceiling paneling. Most lattice-like arrays of joined strip or bar elements may be curved or deflected without permanently deforming and may be retained in such condition by the means provided hereinafter or by other suitable means to provide not only a skeletal structure on which to build a mortar, plaster or cement wall but also means for affording at least some support for said plaster or cement after it has set.

Accordingly, the lattice or honeycomb panel **12** is shown supported by a frame-work of beams, two of which **45** and **45'** are illustrated in FIG. 2 and members **48** extend between said beams to support the latter and to afford support to the panel **12** as well as to assist in defining its shape. The beams illustrated are made of wood as are the cross braces **48** which are cut or formed to

the desired curved shape whereby they will either support or define the shape of the honeycomb panel **12**. The ends of the cross braces **48** are fastened to the beams by means of nails or other suitable fasteners and the honeycomb panel **12** is made to conform to the shape defined by the beams and the cross braces **48** in one or more of several manners prior to the application of a bulk filler material thereto.

In a preferred embodiment, one face of the panel **12** is shown in FIGS. 2 and 3 as being capped with a sheet of material **46** which preferably extends across the entire face thereof. The sheet **46**, which may comprise any suitable plastic, metal, paperboard or laminations of these materials, is preferably relatively light gauge and in the order or .010 to .10 inch thick in order to permit it to conform to the curved shape of the honeycomb panel when deformed as illustrated although lighter or heavier gauge plastic or metal sheet may be employed depending on the size of the panel, framework structure and degree of bending desired. For certain panel structures which are fabricated by spraying on the bulk material which eventually comprises the major portion of the panel, the sheet material **46** may comprise a thin, flexible plastic sheet or film in the order of a few thousandths of an inch in thickness, particularly if the filler material **49** is built up thereon as a series of sprayed-on coatings, each after the previous coating has solidified so that said previous coating may, in itself, comprise a support for subsequent layers. However, if it is desired to utilize the inside surface **46'** as the wall of the room, sheet **46** may be adhesively bonded or otherwise retained against the face of **12**.

Retention of the panel **12** against the beams **45** may be obtained by fastening the sheet member **46** thereto and/or by the means illustrated in FIG. 3. A block of wood **47** or other suitable material is shown filling and secured within at least one of the cells of the honeycomb panel **12** by adhesive means. A fastener **47'** driven through the block **47** from the uncapped face of the panel is shown driven into the beam **45** and retains the assembly thereagainst.

In the partially sectioned view, FIG. 2, filler material **49** which may comprise any suitable mortar, plaster, Portland cement, plastic or foamed plastic is shown completely filling the cells of the lattice or honeycomb panel member **12** and extends a distance beyond the exposed face **12'** of panel **12** layer **49'** so that the edge of the panel **12** is completely covered over and may not be seen. The bulk material **49** is preferably applied by spraying or flowing into the cells of the panel **12** in a plurality of coating operations so that previous layers, when hardened or set, will offer support to subsequent layers applied thereto. As a result, a minimum amount of deformation will be experienced in the strips or wall portions **13** of the panel **12** due to the weight of the filler material **49**. The manner in which the filler material is applied to the panel assembly will depend on a number of factors including, in addition to the geometry and stiffness of panel **12**, the means for supporting said panel, and the attitude of the panel. For example, if the panel **12** is disposed substantially vertical when supported, spraying or flowing the bulk material into the cells may be the best way to apply it thereto. If the panel is disposed in a horizontal attitude or oblique to the horizontal and the capping sheet **46** bonded to the undersurface of the honeycomb panel **12** with sufficient strength to support enough bulk material to fill the cells of the panel, it may suffice to pour the bulk filler material into the cells or to combine the process of flowing and spraying said material.

Once the bulk material has set or hardened, the supporting frame or members **45**, **45'**, **48** etc. may be removed or retained for providing additional support. The capping sheet **46** may also be stripped off or may serve as a working surface per se. A further operation may

include spraying additional bulk material or cement against the outer surface **46'** of sheet **46** to give the appearance that the entire panel is made of said material and to provide a wall surface of simple appearance. In a further embodiment, if the panel **12** is disposed substantially horizontal or curved in a generally horizontal attitude, the capping sheet **46** may be applied to the surface **12'** of panel **12** provided that said surface faces upwardly and mortar or cement may be applied to the outer surface of **46** by spraying without applying it to the cells of the honeycomb member **12** to provide an improved method for forming a curved ceiling member or roof. For such a structure, the beams **45** and **45'** as well as the framework **48** therebetween may be retained in place and supported by vertical columns or removed after the mortar or cement have hardened.

If the outer surface **49'** of the layer **49** is the exterior of a building wall or roof and is exposed to the elements of weather, it may be capped with a material such as polyvinyl fluoride film, sheet metal or a coating of plastic or paint. If surface **49'** faces the interior of a room, it may be used per se or covered with paint, plastic, paper, wood or any other suitable material. Blocks such as **47** of FIG. 1, held by the honeycomb panel, may be used to retain or support articles or structures against the wall and should be provided in predetermined locations.

It is noted that the honeycomb panel member on which the mortar or cement is applied as a series of successive layers may be replaced by other suitable panel members which, although they may not exhibit similar strength and bending characteristics, will serve the important function of providing a base which will retain said Portland cement, mortar or the like when applied by spraying or flowing on successive layers. For example, flexible plastic sponge-like or foamed materials are available in slab or sheet form which have open surface cells into which the lay-up material or mortar will flow when applied thereto as a fluent material. Due to the irregularity of the cell walls, which may be provided in many different sizes, flexibilities and configurations for such polymeric plastic polymers as polyurethanes, vinyl polymers, silicone polymers, polystyrenes and the like, the first layer or coating applied to the face of a similarly supported sheet of foamed plastic may be substantially secured to the surface of the panel to retain a substantial build-up of material against the base panel even though the adhesion between the two materials is poor. After the applied material has set or hardened, the cellular plastic base sheet may be retained in place with or without retention of the frame or other means for supporting said plastic or, both may be removed by stripping off the plastic. The remaining hardened shell may then have the surface from which the plastic is removed, resurfaced by spraying, etc. Or, the foamed plastic base may be retained as an insulating means and its other surface capped or coated with additional mortar or the like of the same or different thickness than the layers first applied thereto.

FIG. 3 illustrates another structure in a wall panel **50**, hereinabove mentioned, in which a sheet or slab of deformable foamed, cellular plastic polymeric material such as expanded polystyrene, polyurethane or the like serves as a base for retaining a plurality of layers of mortar or cement applied thereto by spraying or other means to define a building wall or similar structure. A slab **54** of foamed, cellular plastic material, as described, is shown retained against a frame or other support means to define a particular shape for the wall **51**. In FIG. 3, the frame comprises a plurality of ribs **52** which are joined by cross-members **53** shown as flanged channels welded thereto. The frame, of course, may be made of any suitable material such as wood, rod or tubing of steel or aluminum. Secured to one side of the frame is shown a slab **54** of said cellular plastic material which may be held thereon by means of fasteners, wire stitching, adhesive or other means. Depending on the shape of the frame, the cellular

plastic slab may be curved or deformed to any desirable shape to conform to the frame after which, a layer of Portland cement, mortar or any suitable self setting building material including additional layers of rigid foamed plastic may be applied to the outer surface **54'** of **54**. The capping material **56** may be a plurality of layers of mortar or cement applied as individual coatings or layers by means of a spray gun whereby each previous layer is allowed to set or harden prior to applying the next layer thereon until a wall of a predetermined thickness is derived. Depending on the thickness of the cement or mortar layer **56**, the frame comprising members **52**, **53** may be retained in place or removed thereafter. Furthermore the outer surface **54''** of the cellular plastic slab or sheet **54** may also be coated or built-up with a layer of mortar or cement of predetermined thickness by spraying thereon. The interlayer **54** of foamed plastic will thus serve as an insulating medium within the wall **51**.

The frame supporting the cellular sheet or slab **54** may be fabricated or erected on the ground and lifted to the spatial location of the architectural panel or wall whereafter it is anchored or otherwise supported in position. The cellular slab or sheet **54** is then secured to a face of the frame by means of adhesive bonding, fasteners such as bolts penetrating said slab, wire stitching or stapling or combinations of these fastening means. The cellular slab or slabs **54** may comprise formulations of various thermoplastic or thermosetting materials including expanded polystyrene, polyurethane, vinyl polymers or other thermoplastics or cellular glass. It may also comprise matting made of closely spaced and joined filaments of any suitable material whereupon the applied mortar **56** may also extend into and through the cells or spacings of member **54**.

If sheet or slab **54** is provided as a cellular plastic polymeric material with intercommunicating cells, the mortar or filler material **56** may be sprayed or otherwise applied to a surface thereof in the form of a liquid mix or dispersion which completely penetrates the cells of **54** and forms a hard shell or panel member thereof when it hardens. The layer **56** may then be of a thickness merely to hide the cellular structure of the impregnated base **54** or may extend for any suitable distance away from the surface of **54** depending on the desired thickness of the panel.

Curved panels for any suitable purpose may also be produced using the hereinabove described procedure of impregnating a sheet of cellular material with a hardening material, by placing a sheet or slab or cellular plastic on a base or frame and bowing or otherwise shaping said cellular sheet to a predetermined shape. The sheet may be preimpregnated with a cold setting mortar or other hardening material or impregnated by spraying while on said base and allowed to harden thereon, whereafter the base or frame is removed therefrom.

FIGS. 4 and 5 illustrate structural details of yet another construction in a building wall panel, ceiling or the like which employs a supporting frame made of metal tubing. After completion of the panel, the tubing may serve as means for conducting heat transfer fluid for heating and/or cooling the volume immediately adjacent the wall panel. The panel **60** is defined by a plurality of longitudinal metal tubes or pipes **61** which may be curved or bent as illustrated prior to assembly with a plurality of laterally disposed tubes or pipes **62** to eventually define a curved wall, ceiling or other building structure capable of self support. The lattice-like array of tubes **61** and **62** may also be curved, bent or bowed upon erection on a further frame (not illustrated) or, as defined by other restraining means such as taut wires or the effect of gravity thereon. The tubes are shown welded to each other at W where they cross although other fastening means such as bent wire, U shaped bolts or the like may also be employed to assemble the tubing in the desired lattice-like array. The supporting structure **60** may also comprise tubing joined by tubing plus rods, angles, ribs or other solid shapes depending on the designed parameters and the heat transfer effects desired.

In order to construct a wall panel of such lattice-like array **60**, a sheet **63** of plastic, metal, cloth or laminations of these materials is disposed against the upper face of the structure **60** and a layer or plurality of layers of mortar or cement are then built-up thereon by spraying, direct flow or other means to define the wall layer **64**. The structure **60** illustrated in FIG. 4 may comprise, in addition to a wall, a dome or ceiling of a building which may be rapidly constructed in place with minimum labor by, for example, spraying mortar, cement or self foaming plastic against the sheet or film **63** after it is laid on or secured to the lattice-like structure.

Notation **65** refers to a nozzle defining an opening in the tubing **61** through which water may be dispensed as a spray in the event of a fire occurring within the room defined by the wall structure **60**. The unit **65** may also contain the conventional relief valve operated by heat for dispensing water therefrom. The lattice-like structure may thus be utilized to perform a plurality of functions including, in addition to providing means for supporting the plaster or cement layer **64** during the lay-up thereof, means for providing conduits for the transfer of heat to cool or heat the room and means for dispensing liquid in the form of a spray for the mentioned purposes of quenching a fire, etc.

FIG. 6 illustrates a structure in a wall panel employing a deformed sheet of metal or plastic as a base onto which is sprayed or otherwise applied a plurality of layers of a mortar, cement or cellular self-foaming plastic to define in the bulk portion of the wall. The sheet **14**, which is illustrated in a number of different design configurations in FIGS. 7–11, is first retained to a plurality of supports in the shape of verticals and/or horizontal brace members such as the box beam **45''** illustrated in FIG. 6 and is bent or bowed to the desired curved configuration such as that illustrated at the bottom portion of the figure. In FIG. 6, sheet **14** is illustrated as having a plurality of waffle-like indentations **16** formed therein which serve the multiple functions of rigidizing the sheet as well as defining cavities for retaining the bulk filler material **49** as a layer against the surface of said sheet. The sheet **14** is thus provided with a plurality of closely spaced indentions therein such as dimple formations which protrude either from one or both surfaces of the sheet. In FIG. 7 the indentations **16** project inward from one surface of a sheet while other adjacent indentations **16'** deform inwardly from the other surface of the sheet and are somewhat rectangular in shape defining a waffle-like formations. In FIG. 8, the indentations **17** and **17'** define surfaces which are semi-spherical in shape. In a preferred form of the invention, all indentations protrude inwardly from that surface of the sheet against which mortar or building cement is to be sprayed. Preparations of said surface may be effected by first applying a coating of adhesive or a self-forming plastic as a thin layer for retaining the mortar or cement thereagainst.

The dimpled sheet **14** is first retained against a frame or plurality of uprights secured in place such as the illustrated box-beam **45''** by means of fasteners such as nails or screws penetrating portions of the sheet. Once the dimpled sheet has been bowed or bent to define its shape and is retained in place, spraying of mortar, adhesive or self-foaming plastic may be commenced against a surface thereof with each subsequent layer applied after the previous layer has at least partially set or hardened so that there will be little if any flow of said material off the sheet. The cavities or dimple formations are soon filled by flow of said mortar material from the adjacent land or raised portions of the sheet and eventually a smooth outer surface such as **49''** conforming to the general shape of the sheet will be defined at a predetermined

distance thereof to define a layer of predetermined thickness.

Notation 11 refers to a capping sheet of metal, plastic or other suitable material which is placed over the other surface of the sheet 14 and may serve a number of useful purposes. The capping sheet, if spot welded to the contacting raised portions of the base sheet 14, will substantially strengthen said base sheet. It will also serve as means for providing a smooth surface for the interior of the building or the exterior thereof. A third of its functions is that it totally encloses the volumes 16' defined by the dimple formations protruding inward from the surface against which it is secured and the entrapped volumes, containing air, may serve as insulating means for the panel.

FIG. 9 illustrates a fragment of a sheet of metal having an integrally formed vein-like duct or ducts protruding outwardly from surface thereof in a pattern or array to serve substantially the same function or functions as the waffle-like formations of the sheet of metal of FIGS. 6 and 7. The metal sheet 14'' may be fabricated in accordance with the teachings of U.S. Patent #2,662,273 which involves printing a pattern of stop-weld material on a first sheet of metal such as aluminum and roll-bonding said sheet to a second sheet in a manner to weld the two together save in the printed areas which define strip-like volumes, which are capable of being expanded by the application of fluid pressure thereto. A lattice-like array of conduit formations including horizontally extending formations 18 and vertically extending vein-like ducts 19 is shown to provide indented areas 20 of the sheet, each of which is surrounded by said vein-like duct formations. The indented areas thus serve as wells for receiving mortar, cement or self-foaming plastic and to retain said material against the sheet as it sets. The duct-like formations 18 and/or 19 may also serve as means for carrying a heat transfer fluid for cooling or heating the wall panel and the room or volume into which it extends or surrounds. Notation 21 refers to a plurality of dimple-like formations provided in the duct-free portions 20 of the sheet, which may be utilized to further retain material sprayed or otherwise applied to the surface of the panel 14'' until a layer is built up thereon. In a further form of the wall panel, the expanded sheet 14'' of FIG. 9 may be capped with a second sheet of metal whereby the non-expanded areas 20 of the sheet which are lower or indented relative to the expanded formations 18 and 19, will define walls of volumes containing either air or said mortar or expanded plastic material. The capping sheet may also contain duct-like formations such as 18 and 19, which extend adjacent to or between the formations of the sheet 14'' or may merely comprise a flat sheet of metal, which is welded or bonded to sheet 14'' to define a panel having voids defined by the volumes adjacent portions 20 and separated by the raised portions or duct formations 18 and 19. The capping sheet may thus be welded to the walls of the duct formations 18 and 19 and/or to the formations 20 therebetween by providing dimple formations in either the sheet material comprising 20 or in the capping sheet. By providing openings in certain of the duct formations, filler material may be discharged into said formations and through said openings into the volumes defined thereby and the non expanded portions 20 of the sheet, while other of said vein-like duct formations may be utilized to carry heat transfer fluid and may not be connected to those formations carrying said filler material. The filler material may comprise mortar, cement or self-expanding cellular plastic.

FIGS. 10 and 11, illustrate a sheet 22 of metal or plastic which may be utilized in place of the sheet 14 of FIG. 6 and serves an additional function in that it is shaped for permitting a heat transfer fluid to be flowed through the assembly of 22 and capping sheet 11. The sheet 22 is provided with a plurality of channels 26 and 26' which extend parallel to each other. Each channel or indentation has inwardly extending sidewalls 23 and a bottom wall 24, the primed notations referring to similar formations defining the channels in the opposite surface of the sheet. In order to provide a rigidizing effect similar to that provided by the waffle-like formations of the sheet of FIG. 7, the bottom walls 24 and 24' of each channel are indented with bridge-like formations 25 and extending completely across the channel to a depth which is less than the complete depth of the channel. Therefore, although the channel is reduced in cross-section or restricted at each ridge-like formation 25, it is not completely closed off. If a capping sheet is applied to either or both surfaces of the deformed sheet 22 as in FIG. 6, a continuous duct or channel is thus provided between the capping sheet and each channel formation 26 even though the formations 25 are provided therein. Thus, a rigidizing effect is derived and the sheet 22 is divided into a plurality of separate indentations 27 which serve to retain bulk filler material such as 13 when sprayed or otherwise applied thereagainst.

The sheet or panel 22 illustrated in FIGS. 10 and 11, may thus be utilized in combination with a bulk filler material in place of sheet 14 in the arrangement of FIG. 6 or may be combined with one or two capping sheets applied to either or both surfaces thereof to provide a unique panel structure having both longitudinal and lateral reinforcing rib-like formations, but also containing parallel fluid carrying duct formations 26 and 26' defined by sheet 22 and said capping sheets. The capping sheets may be welded or bonded to the outer surfaces of the base portions 24 and 24' of the channels leaving volumes 26 and 26' extending parallel along the panel which may contain air, a heat transfer fluid or a bulk filler material. These volumes provide continuous passageways along the panel certain of which may be filled with a reinforcing or bulk material as described while others may be retained free of such material to permit the flow of fluid therethrough. Headers connected to the end of the sheet or a plurality of said sheets which are edge matched and interconnected, may be used to flow fluid through certain of said passageways to heat and/or cool a room or container bounded by said panel.

Other forms of the invention include, (a) applying to the honeycomb, plastic or honeycomb panel assemblies described as self-foaming plastic polymer such as an expandable polyurethane, polyvinyl chloride, polystyrene or the like, by spraying or otherwise flowing said plastic onto said panel. The expanded, foamed cellular plastic layer may thereafter be capped or coated with plaster, cement, plastic, paint, plastic film, metal sheet or other suitable material or the cells of the foamed plastic at the outer surface thereof may be closed by the application of heat thereto to form a smooth and substantially non-porous surface which may be used as the inside surface of the wall per se.

In addition to using a honeycomb panel or a slab of cellular plastic, various other suitable panel structures may be applied as the means for retaining the cold setting cement or plaster layer or layers. Sheet metal may suffice for certain applications where it is desired to build up a wall structure of curved or irregular shape provided that said metal is shaped to (a) restrict the flow of the coating material applied thereto, and (b) provide the required strength and degree of deformability. The base panel, for example, may comprise a sheet or slab of cellular plastic which is internally or externally reinforced or supported by lattice-like arrangements of wires, rods, tubing or the like or by sheet metal such as corrugated metal sheet or sheet deformed as hereinafter described. The two materials may be bonded together in the form of panels with the metal portion adapted with holes, flanges, beads or the like for securing the panel to further uprights such as beams 45 and 45', or cross-members 48, 52, etc. Such metal panel portions as well as those to be hereinafter described may be edge shaped

to permit rapid and simple assembly of a plurality of panels of similar structure by edge-by-edge fastening means.

FIG. 12 illustrates the ducted sheet metal panel of FIG. 9 applied to a housing or building wall structure **30**. The tubed sheet or panel is referred to by the notation **31** since it may either be provided with the lattice-like array of vein-like ducts illustrated in FIG. 9 or merely a plurality of parallel duct formations **32** extending substantially across the entire sheet. The sheet **31** is shown supported by a structural member **34** which is secured by means of rivets or screws F extending through a flange of **34** and the portion **31'** of the sheet **31** between the fluid conduit portions **32**. Bonded to the irregular surface of **31** is a layer **19** of mortar material, cellular expanded plastic, or any suitable insulation as described. The conduit portions **32** thus protrude into the formation or layer of bulk material **13** so that both faces of the panel assembly **30** are substantially flat. The outer surface of **19** may thus be utilized either as the interior surface of a room or the exterior surface of a building. Flowing heat transfer fluid through the conduit portions **32** of sheet **31** may be utilized to heat or cool the panel and accordingly heat or cool the room which the panel surrounds or extends adjacent to. Notation **33** refers to a sheet of metal or plastic capping the mortar layer **19** and is optionally provided depending on the requirements of the wall or panel **30**. For example, the panel comprising sheet members **31** and **33** with the mortar or expanded plastic interlayer **19** may be prefabricated and utilized as a building wall or partition which is assembled with other similar panels and skeletal frame work as described. Accordingly it may be desirable to cap both faces of the bulk material **19** comprising the major portion of the panel **30**. However, if the panel is constructed on the site as hereinabove described by first securing the ducted panel **31** to a skeletal framework and then applying one or more layers of the material comprising **19** to the face of **31**, the capping sheet **33** may not be necessary or desirable. Instead, it may be replaced by a sprayed-on coating of any suitable material, or by a film of plastic such as polyvinyl fluoride, or the outer face of the mortar material **13** may be exposed per se.

In FIG. 13 is shown a structure in a wall panel **35** comprising a ducted panel **31** of the type hereinabove described and a sheet **32** of metal or plastic disposed against the outermost portions of the deformed conduit portions **32** of the ducted sheet **31**. Accordingly, volumes **37** are formed between the tubed sheet **31** and capping sheet **36**, which volumes contain air and serve as insulating means for the panel.

The sheet **36** may be adhesively bonded to the outer faces or extremities **32'** of the conduit portions **32**. Said sheet **36** may also be fastened to the panel **31** with fasteners such as rivets or screws or may be welded to the outermost portions **32'** of the conduit portions **32** of sheet **31**. Such welding may be effected while sheet **31** is in an unexpanded state wherein the strip-like volumes disposed within said sheet to be expanded with fluid pressure, contain stop weld material. Accordingly, if welding electrodes are applied to the outer faces of sheets **31** and **36** in alignment with the stop-weld material in **31** and while the two sheets are in abutment with each other, a spot or line weld may be effected between sheet **36** and those portions of sheet **31** which eventually become expanded to define the conduit portions **32** since the stop-weld material will prevent further welding of the portions of sheet **31** adjacent thereto. After such welding action, the conduit portions **32** may be expanded by fluid pressure resulting in a panel such as **35** of FIG. 13 which contains both insulating volumes **37** and conduit portions **32** through which heat transfer fluid may be flowed. Notation **32*w*** refers to a weld defined between the wall portion **32'** of sheet **31** and sheet **36**.

In still other forms of the invention, materials other than cold setting mortar or self foaming thermoplastics may be spray applied to the various base panels described such as the honeycomb panels, deformed sheet metal or foam plastic. Thermoplastic plastics per se may, for example, be applied as a hot spray in a plurality of passes across the panel base being constructed to a predetermined thickness. Powdered plastics, such as powdered polyethylene, polypropylene, polyvinyl fluoride or the like may be introduced into the flame of a flame spray gun and applied as a layer or plurality of layers against the base sheet or panel or against the mortar or foamed plastic material first applied thereto. Thus the sprayed on thermoplastic material may comprise a major portion of the panel or a surface coating therefor, and depending on the base material, may be preceded by a sprayed on coating of adhesive. Flame sprayed powdered plastic may be applied directly to certain cellular materials such as cellular glass or certain plastics without destroying the cell structure.

In another form of the invention, fibers such as glass fibers metal whiskers or the like and plastic may be spray applied to the surface of either the base panel or to the layer of mortar or cellular plastic applied thereon to provide a panel of substantial strength. Liquid polyester or epoxy resins which are self hardening at ambient temperatures may be utilized in mixture with fibers or filiments. Glass fibers, metal whiskers or the like may be sprayed into or adjacent a stream of thermoplastic particles introduced through a flame to melt said particles proir to impact with the surface being sprayed. The combined fiber reinforced plastic structure may be used as a coating per se or the major portion of the panel so constructed.

I claim:

1. A method of fabricating a building wall panel in place comprising the steps of:

(a) providing a sheet of flexible foamed plastic material having open surface cells,

(b) supporting said foamed plastic sheet in a curved or bowed attitude to define a particular well shape,

(c) applying a first layer of mortar-like material to a major face of said flexible foamed plastic sheet by spray-up means with said first layer adhering thereto in a mechanical bond by filling said open surface cells,

(d) and thereafter constructing a hard shell of self supporting mortar substantially the contour of said supported foamed plastic sheet by successively applying further layers of said mortar-like material in a manner to build up said hard shell.

2. A method in accordance with claim **1** in which said foamed plastic sheet is supported on a frame of rigid bracing elements.

3. A method in accordance with claim **2** in which said supporting means for said foamed plastic includes a honeycomb panel.

4. A method of fabricating an architectural panel comprising the steps of:

(a) providing a lattice-like panel support capable of flexture and having a plurality of interconnected skeletal elements arranged with voids between adjacent elements,

(b) securing a flexible sheet material to one surface of said lattice-like support to close off said voids,

(c) supporting said lattice-like support and sheet in a manner to cause it to bow and to impart a curved shape thereto,

(d) forming an architectural panel or wall by applying to a face of said sheet a bulk mortar-like material as a plurality of layers of said material in a fluent state with each layer applied over the previous layer after said previous layer has substantially set to form a hard shell which is self-supporting, and

(e) retaining said lattice-like support and said sheet of

flexible material in assembly with said hard shell to serve as an integral component of the architectural panel and to provide substantial support therefor.

5. A method in accordance with claim 1 in which said mortar-like material is Portland cement or the like and is applied by spray means as a series of successive coatings to build up a layer of cement of substantial thickness which forms a hard, self-supporting shell.

6. A method of farbicating an architectural panel comprising the steps of:

(a) providing a lattice-like panel support capable of flexture and having a plurality of interconnected skeletal elements arranged with voids between adjacent elements,

(b) securing a flexible sheet material to one surface of said lattice-like support to close off said voids,

(c) supporting said lattice-like support and sheet in a manner to cause it to bow and to impart a curved shape thereto,

(d) forming an architectural panel or wall by applying to a face of said sheet a bulk mortar-like material as a plurality of layers of said material in a fluent state with each layer applied over the previous layer after said previous layer has substantially set to form a hard shell which is self-supporting, and

(e) stripping said lattice-like support off said shell after said mortar-like material has solidified to sufficiently support itself.

7. A method in accordance with claim 6, including the further step of also removing said sheet of flexible material from the solidified bulk mortar-like material.

8. A method of fabricating an architectural panel comprising the steps of:

(a) providing a lattice-like panel support capable of flexture and having a plurality of interconnected skeletal elements arranged with voids between adjacent elements,

(b) securing a flexible sheet material to one surface of said lattice-like support to close off said voids,

(c) supporting said lattice-like support and sheet in a manner to cause it to bow and to impart a curved shape thereto,

(d) forming an architectural panel or wall by applying to a face of said sheet a bulk motar-like material as a plurality of layers of said material in a fluent state with each layer applied over the previous layer after said previous layer has substantially set to form a hard shell which is self-supporting, and

(e) applying a further layer of mortar-like material to the other surface of said flexible sheet material to encapsulate said lattice-like support and flexible sheet in the resulting architectural panel.

9. A method of fabricating a wall panel comprising the steps of:

(a) providing a panel of honeycomb material having open cells and substantially parallel major faces,

(b) securing a thin sheet to one face of said honeycomb panel to close off the cells thereof from one side of said panel,

(c) erecting a supporting structure for said honeycomb panel at the spatial location of said wall panel and securing said honeycomb panel thereto,

(d) thereafter spraying a bulk material as a layer against one face of said thin sheet supported by said honeycomb panel,

(e) hardening said bulk material in place, and

(f) thereafter constructing a hard shell of said bulk material but successively applying further layers thereof over the first layer to build said hard shell into a wall.

10. A method in accordance with claim 9 in which said bulk material is applied to the surface of said sheet facing the inside of said cells and is first applied in a manner to completely fill said cells and subsequently applied to build up a layer beyond the other face of said cells.

11. A method of fabricating a panel comprising the steps of:

(a) providing a sheet of foamed cellular material having open surface cells,

(b) deforming said cellular sheet by bowing it to a predetermined curved shape, and

(c) while said sheet is so deformed, applying a coating of a plastic material to a surface thereof and hardening said plastic thereon to provide sufficient rigidity to said sheet of cellular material whereby it will retain said bowed shape thereafter.

12. A method of fabricating an article of manufacture comprising the steps of:

(a) providing a base having a surface contoured to substantially the shape of the article to be fabricated,

(b) introducing a plurality of particles of thermoplastic material into the flame of a flame spray gun to render said particles semi-molten and directing said particles as a spray against said surface of said base,

(c) relatively moving said base and said spray gun in a manner to deposit a layer of said particles on the surface of said base,

(d) simultaneously introducing a plurality of reinfarcing elements such as fibers of glass, metal whiskers or the like into the stream of said spraying particles and depositing said reinforcing elements along with said semi-molten particles on the surface of said base,

(e) solidifying said semi-molten thermoplastic particles into a solid shell on said surface of said base with said reinforcing elements encapsulated in said shell, and

(f) continuing to apply said semi-molten particles and reinforcing elements to said base until a layer of predetermined thickness has been built up on said base defining a hard shell of the desired shape.

13. A method of fabricating a heat transfer panel comprising the steps of joining a plurality of sections of tubing together to provide a lattice-like array of tubes which define a first panel member, supporting said first panel member to define a base onto which to form a panel, placing and retaining a sheet material against a face of said first panel member to close off the voids between said tubes, applying a second panel member against a face of said first panel member as a plurality of layers of a bulk material such as motar or the like and building up thereon a wall of said mortar of predetermined thickness by applying each layer after the previous layer has solidified to define a panel which is reinforced by said lattice-like array of tubes and thereafter connecting said tubes to a pumping system for heat transfer fluid to circulate fluid through said tubes after erection of said panel.

References Cited by the Examiner

UNITED STATES PATENTS

1,366,147	1/1921	Worthington	161—136 XR
1,740,336	12/1929	Crittal et al.	165—56
2,052,359	8/1936	Musgrave	165—56
2,512,875	6/1950	Reynolds	165—136 XR
2,548,036	4/1951	Milborn	165—56
2,644,777	7/1953	Havens	161—68 XR
2,833,524	5/1958	Wolf	165—56
3,044,919	7/1962	Stoneburner	156—71
3,106,751	10/1963	Fish	52—744

EARL M. BERGERT, *Primary Examiner.*

H. ANSHER, *Examiner.*