Office de la Propriété Intellectuelle du Canada
Un organisme d'Industrie Canada

Canadian Intellectual Property Office
An agency of Industry Canada

CA 2441166 C 2011/08/09

(11)(21) 2 441 166

(12) BREVET CANADIEN
CANADIAN PATENT

(13) C

(86) Date de dépôt PCT/PCT Filing Date: 2002/02/08
(87) Date publication PCT/PCT Publication Date: 2002/10/31
(45) Date de délivrance/Issue Date: 2011/08/09
(85) Entrée phase nationale/National Entry: 2003/09/10
(86) N° demande PCT/PCT Application No.: US 2002/004098
(87) N° publication PCT/PCT Publication No.: 2002/085534
(30) Priorité/Priority: 2001/03/14 (US09/808,584)

(51) Cl.Int./Int.Cl. *B05D 1/28* (2006.01),
C09J 7/02 (2006.01)

(72) Inventeurs/Inventors:
JACOBSON, JOHN R., US;
HAZARD, RUSSELL P., US

(73) Propriétaire/Owner:
3M INNOVATIVE PROPERTIES COMPANY, US

(74) Agent: SMART & BIGGAR

(54) Titre : APPAREIL DE REVETEMENT
(54) Title: COATING APPARATUS

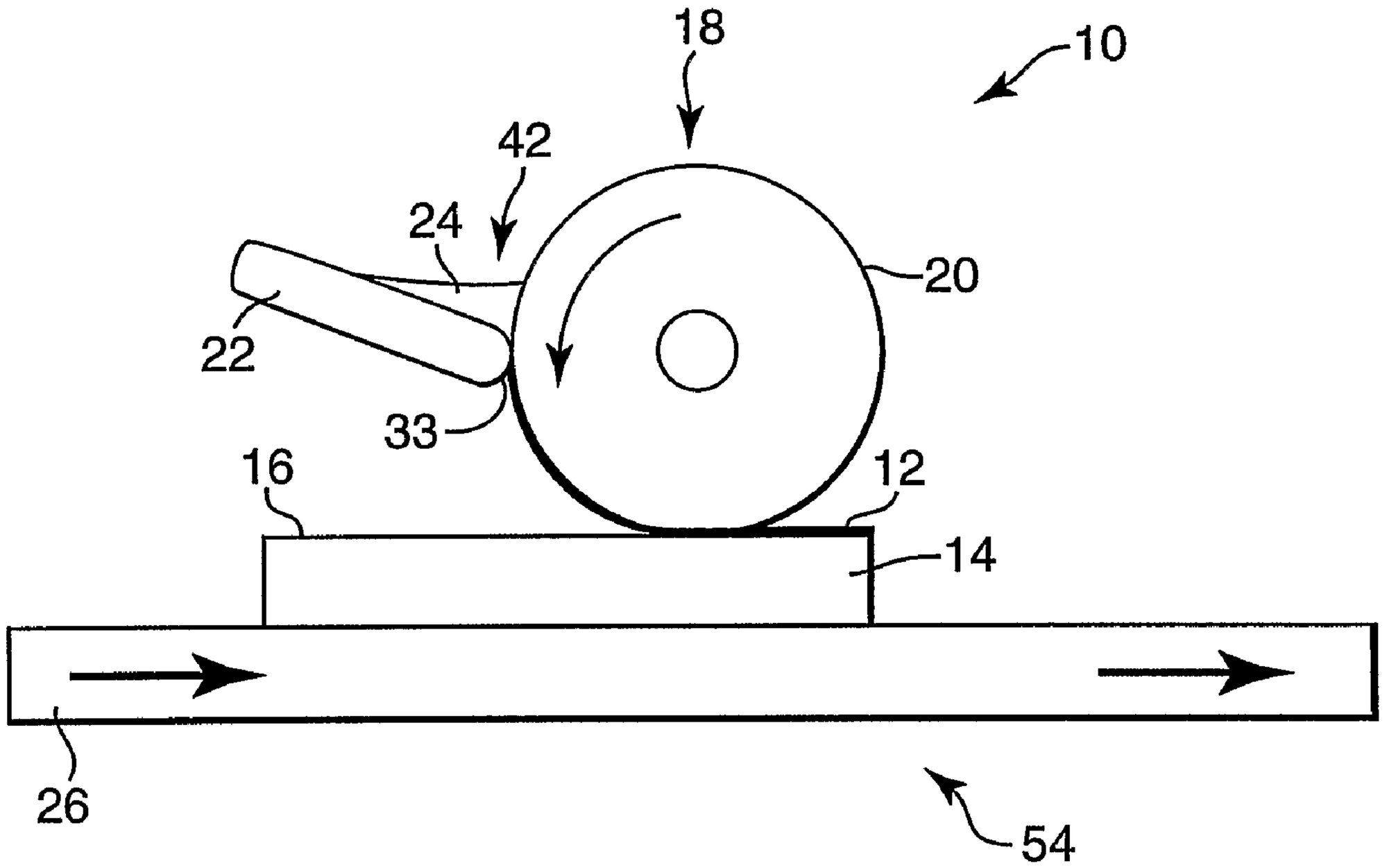

(57) Abrégé/Abstract:
An apparatus (10) for coating an article (14) where the apparatus includes an applicator (18), a conveyor (26) for sequentially transporting a plurality of articles to the roller (18) and a metering bar positioned against the applicator to meter a predetermined amount of coating composition to the applicator for transfer to an article transported to said applicator by the conveyor.

(12) INTERNATIONAL APPLICATION PUBLISHED UNDER THE PATENT COOPERATION TREATY (PCT)

(19) World Intellectual Property Organization
International Bureau

(43) International Publication Date
31 October 2002 (31.10.2002)

PCT

(10) International Publication Number
WO 02/085534 A1

(51) International Patent Classification[7]: B05C 1/02, 1/08, 1/14, 9/04, 11/04

(21) International Application Number: PCT/US02/04098

(22) International Filing Date: 8 February 2002 (08.02.2002)

(25) Filing Language: English

(26) Publication Language: English

(30) Priority Data:
09/808,584 14 March 2001 (14.03.2001) US

(71) Applicant: **3M INNOVATIVE PROPERTIES COMPANY** [US/US]; 3M Center, Post Office Box 33427, Saint Paul, MN 55133-3427 (US).

(72) Inventors: **JACOBSON, John R.**; Post Office Box 33427, Saint Paul, MN 55133-3427 (US). **HAZARD, Russell P.**; Post Office Box 33427, Saint Paul, MN 55133-3427 (US).

(74) Agents: **PATCHETT, David B.** et al.; Office of Intellectual Property Counsel, Post Office Box 33427, Saint Paul, MN 55133-3427 (US).

(81) Designated States *(national)*: AE, AG, AL, AM, AT (utility model), AT, AU, AZ, BA, BB, BG, BR, BY, BZ, CA, CH, CN, CO, CR, CU, CZ (utility model), CZ, DE (utility model), DE, DK (utility model), DK, DM, DZ, EC, EE (utility model), EE, ES, FI (utility model), FI, GB, GD, GE, GH, GM, HR, HU, ID, IL, IN, IS, JP, KE, KG, KP, KR, KZ, LC, LK, LR, LS, LT, LU, LV, MA, MD, MG, MK, MN, MW, MX, MZ, NO, NZ, OM, PH, PL, PT, RO, RU, SD, SE, SG, SI, SK (utility model), SK, SL, TJ, TM, TN, TR, TT, TZ, UA, UG, UZ, VN, YU, ZA, ZM, ZW.

(84) Designated States *(regional)*: ARIPO patent (GH, GM, KE, LS, MW, MZ, SD, SL, SZ, TZ, UG, ZM, ZW), Eurasian patent (AM, AZ, BY, KG, KZ, MD, RU, TJ, TM), European patent (AT, BE, CH, CY, DE, DK, ES, FI, FR, GB, GR, IE, IT, LU, MC, NL, PT, SE, TR), OAPI patent (BF, BJ, CF, CG, CI, CM, GA, GN, GQ, GW, ML, MR, NE, SN, TD, TG).

Published:
— *with international search report*

For two-letter codes and other abbreviations, refer to the "Guidance Notes on Codes and Abbreviations" appearing at the beginning of each regular issue of the PCT Gazette.

(54) Title: COATING APPARATUS

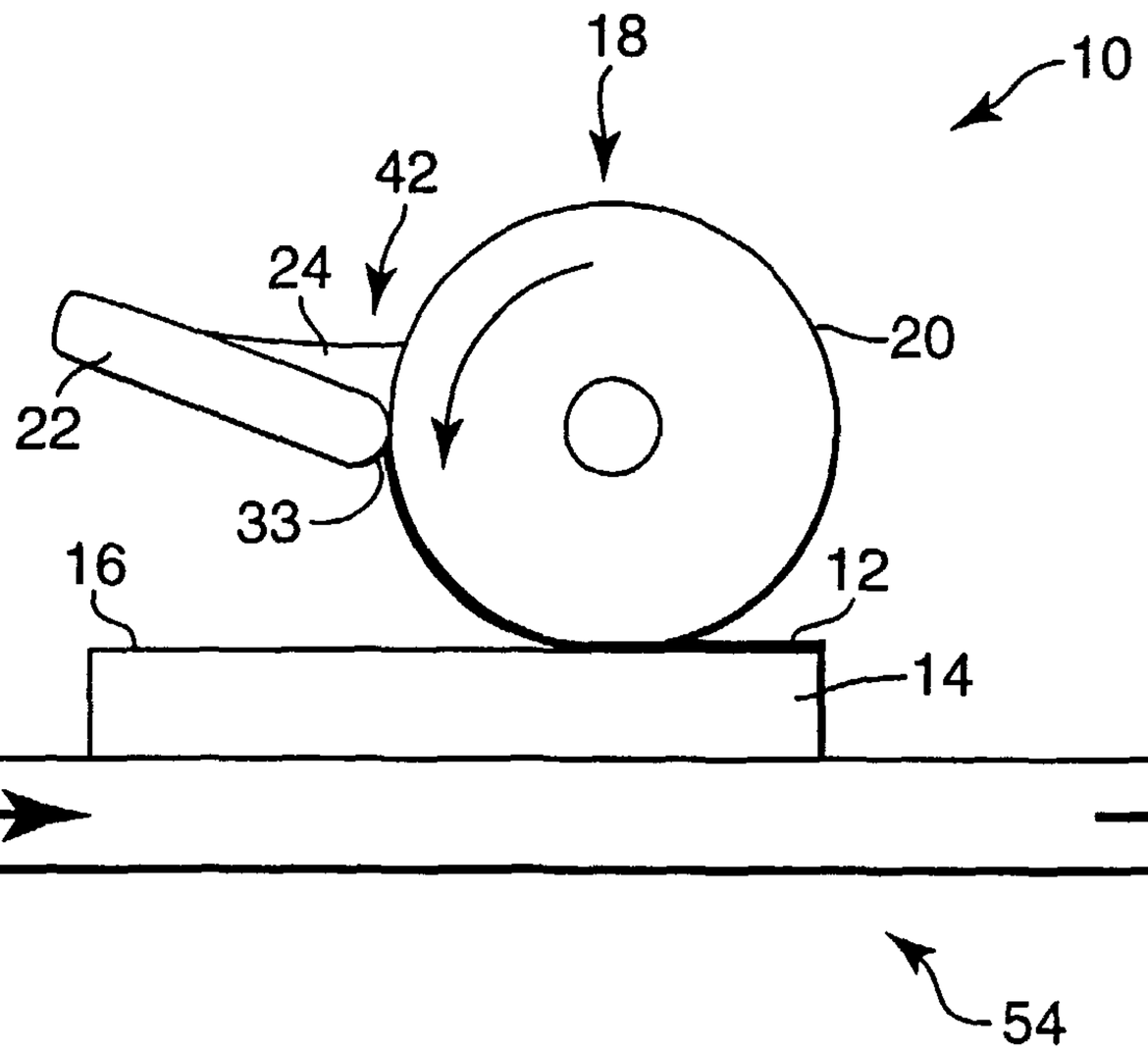

(57) Abstract: An apparatus (10) for coating an article (14) where the apparatus includes an applicator (18), a conveyor (26) for sequentially transporting a plurality of articles to the roller (18) and a metering bar positioned against the applicator to meter a predetermined amount of coating composition to the applicator for transfer to an article transported to said applicator by the conveyor.

WO 02/085534 A1

60557-6983

COATING APPARATUS

Background of the Invention

The invention is directed to coating articles.

A roll of pressure sensitive adhesive tape is often prepared by applying a pressure sensitive adhesive composition to a backing and then winding the backing on a cylindrical core to form the roll of tape. The edge face of the roll of tape often includes exposed pressure sensitive adhesive, which renders the edge face tacky. In addition, when the tape is wound upon a cylindrical core to form a roll, uneven winding may occur which may cause variations in the edge face surface.

Multiple rolls of pressure sensitive adhesive tape are often packaged in a stack. When rolls of pressure sensitive adhesive tape are stacked on top of one another they tend to block, i.e., stick together. Blocking tends to increase in frequency and degree over time and at elevated temperatures, e.g., above room temperature. The edge face of a roll of tape may also stick to its packaging, which can make removal of the roll of tape from the packaging difficult. Electrical tape, for example, which is often sold in plastic containers, tends to stick to the plastic walls of the container. The tacky nature of the edge face also tends to pick up dust, dirt and other particulate debris from the environment.

A number of methods have been developed to protect the edge face of a roll of adhesive tape or detackify the exposed adhesive on the edge face. One common method involves placing a sheet of paper in contact with the edge face, e.g., between two rolls of tape. Another method involves coating the edge face of a roll of tape with very small glass beads. The glass beads tend to fall off the roll, which can cause contamination or damage to manufacturing processes and machinery. Other methods include applying a detackifying agent to the edge of a strip of tape using a sponge or a cloth prior to winding the strip of tape upon a cylindrical core to form a roll.

60557-6983

Summary

In one aspect of the invention, there is provided a method of coating an article, comprising: using a coating apparatus, the coating apparatus comprising a first applicator comprising a convex exterior surface, a conveyor for sequentially transporting a plurality of articles to said first applicator, and a metering bar comprising a fixed arcuate end positioned against said convex exterior surface of said first applicator to meter a predetermined amount of coating composition to said first applicator for transfer from said convex exterior surface of said first applicator to an article transported to said first applicator by said conveyor, said metering bar forming a nip with said convex exterior surface of said first applicator and exterting a force against said first applicator, said predetermined amount of coating composition being determined, in part, by said force of said metering bar and a hydraulic force present at said nip; applying a liquid coating composition to said first applicator; and transferring said coating composition from said applicator to the article, wherein the article is a roll of tape and the method is used to coat the edge face of the roll of tape; wherein said first applicator comprises an endless belt.

According to another aspect of the present invention, there is provided an apparatus for coating an article, said apparatus comprising: a first applicator comprising a convex exterior surface; a conveyor for sequentially transporting a plurality of articles to said first applicator; and a metering bar comprising a fixed arcuate end positioned against said convex exterior surface of said first applicator to meter a predetermined amount of coating composition to said convex exterior surface of said first applicator for transfer from said convex exterior surface of said first applicator to an article transported to said applicator by said conveyor, said metering bar forming a nip with said convex exterior surface of said first applicator and exerting a force against said first applicator, said predetermined amount of coating composition being determined, in part, by said force of said metering bar and a hydraulic force present at said nip; and wherein said first applicator comprises an endless belt.

60557-6983

According to still another aspect of the present invention, there is provided a system for manufacturing coated articles, said system comprising a first station comprising a coating apparatus comprising a first applicator comprising a convex exterior surface, a conveyor capable of sequentially transporting a plurality of articles to said first applicator, and a metering bar positioned against said convex exterior surface of said first applicator to meter a predetermined amount of coating composition to said convex exterior surface of said first applicator for transfer from said convex exterior surface of said first applicator to an article transported to said first applicator by said conveyor, said metering bar forming a nip with said convex exterior surface of said first applicator and exerting a force against said first applicator, said predetermined amount of coating composition being determined, in part, by said force of said metering bar and a hydraulic force present at said nip, a second station for solidifying the coating composition disposed on the article; wherein said first applicator comprises an endless belt.

According to yet another aspect of the present invention, there is provided a system for manufacturing coated articles, said system comprising a first station comprising a coating apparatus comprising a first applicator comprising an endless belt, a conveyor capable of sequentially transporting a plurality of articles to said first applicator, and a metering bar positioned against said first applicator to meter a predetermined amount of coating composition to said first applicator for transfer to the article transported to said first applicator by said conveyor said metering bar comprising a fixed arcuate end positioned against said first applicator forming a nip with said first applicator and exerting a force against said first applicator, said predetermined amount of coating composition being determined, in part, by said force of said metering bar and a hydraulic force at said nip; a second applicator positioned to receive the article from said conveyor, and a second metering bar positioned against said second applicator to meter a predetermined amount of coating composition to said second applicator, wherein said second applicator is positioned opposite said first applicator; and a second station for solidifying the coating composition disposed on the article.

60557-6983

In another aspect, the invention features an apparatus for coating an article, the apparatus comprising a first applicator, a conveyor for sequentially transporting a plurality of articles to the first applicator and a metering bar positioned against the applicator to meter a predetermined amount of coating composition to the first applicator for transfer to an article transported to the applicator by the conveyor. In one embodiment, the applicator includes

a roller having a durometer of no greater than about 55 Shore A. In another embodiment, the coating apparatus is capable of applying a substantially uniform layer of coating composition on a plurality of articles having different dimensions.

In some embodiments, the end of the metering bar positioned against the roller has a radius of at least about 2.5 mm. In other embodiments, the end of the metering bar positioned against the roller has a radius of at least about 4.0 mm. In another embodiment, the metering bar exerts a force of at least about 35 g/cm width against the applicator. In some embodiments, the metering bar exerts a force of from about 45 g/cm width to about 900 g/cm width against the applicator.

In one embodiment, the conveyor is positioned relative to the applicator such that the applicator is capable of coating the edge face of a roll of tape disposed between the conveyor and the applicator. In one embodiment, the applicator is a roller. In other embodiments, the applicator is an endless belt.

In other embodiments, the apparatus further includes a second applicator and a second metering bar positioned against the second applicator to meter a predetermined amount of coating composition to the second applicator, the second applicator being positioned to receive an article from the conveyor. In one embodiment, the first applicator is a roller and the second applicator is a roller. In other embodiments, the first applicator includes an endless belt. In some embodiments, the second applicator includes an endless belt.

In another embodiment, the apparatus is capable of substantially simultaneously transferring a coating composition from the first applicator to a first side of an article, and transferring a coating composition from the second applicator to a second side of the article opposite the first side of the article. In some embodiments, the article is a roll of tape and the apparatus is capable of substantially simultaneously transferring a coating composition from the first applicator to a first edge face of a roll of tape and transferring a coating composition from the second applicator to a second edge face of the roll of tape opposite the first edge face of the roll of tape.

In one embodiment, the first applicator and the second applicator are positioned to maintain an article between the first applicator and the second applicator.

In another aspect, the invention features a system for manufacturing coated articles, the system including a first station comprising a coating apparatus that includes a first

applicator, a conveyor capable of sequentially transporting a plurality of articles to the first applicator, and a metering bar positioned against the first applicator to meter a predetermined amount of coating composition to the applicator for transfer to an article transported to the applicator by the conveyor, and a second station for solidifying the coating composition disposed on the article.

In some embodiments, the applicator includes a roller. In other embodiments, the applicator includes an endless belt.

In another embodiment, the conveyor is capable of transporting a coated article to the second station.

In other embodiments, the system further includes a second conveyor capable of transporting a coated article from the first station to the second station. In one embodiment, the system further includes a second conveyor comprising a first endless belt and a second endless belt, the second conveyor being positioned to transport a coated article to the second station. In some embodiments, the system further includes a second applicator positioned to receive an article from the conveyor, and a second metering bar positioned against the second applicator to meter a predetermined amount of coating composition to the second applicator. In another embodiment, the system further includes a second applicator positioned opposite the first applicator, and a second metering bar positioned against the second applicator to meter a predetermined amount of coating composition to the second applicator. In one embodiment, the system further includes a second conveyor positioned to transport a coated article to the second station. In another embodiment, the system further includes a second conveyor comprising a first endless belt and a second endless belt, the second conveyor being positioned to transport a coated article to the second station. In one embodiment, the second conveyor is capable of transporting a coated article between the first endless belt and the second endless belt.

In some embodiments, the second station includes a source of radiation. In one embodiment, the source of radiation is capable of generating radiation selected from the group consisting of ultraviolet radiation and electron beam radiation. In other embodiments, the solidifying includes curing. In yet other embodiments, the solidifying includes drying.

In another aspect, the invention features a method of coating an article, comprising: using a coating apparatus, the coating apparatus comprising an applicator, a conveyor for transporting an article to an

applicator, and a metering bar positioned against the applicator to meter a predetermined amount of coating composition to the applicator, the method including applying a liquid coating composition to the applicator and transferring the coating composition from the applicator to the article. In some embodiments, the coating composition has a viscosity of at least about 15 cps. In other embodiments, the coating composition has a viscosity of at least about 19 cps. In one embodiment, the method further includes curing the coated composition. In another embodiment, the method further includes drying the coated composition

In some aspects, the invention features a method of coating the edge face of a roll of tape using a coating apparatus that includes an applicator, a conveyor for transporting a roll of tape to the applicator, and a metering bar positioned against the applicator to meter a predetermined amount of coating composition to the applicator, the method including applying a liquid coating composition to the applicator, and transferring the coating composition from the applicator to the edge face of the roll of tape. In one embodiment, the composition has a viscosity of at least about 15 cps. In other embodiments, the composition has a viscosity of at least about 19 cps.

In some embodiments, the end of the metering bar positioned against the applicator has a radius of at least about 3 mm. In other embodiments, the end of the metering bar positioned against the applicator has a radius of at least about 4 mm. In one embodiment, the metering bar exerts a force of at least about 35 g/cm width against the applicator. In other embodiments, the metering bar exerts a force of from about 45 g/cm width to about 900 g/cm width against the applicator.

In another embodiment, the conveyor is positioned relative to the applicator such that the applicator is capable of coating the edge face of a roll of tape disposed between the conveyor and the applicator. In one embodiment, the method further includes a second applicator positioned to receive an article from the conveyor, and a second metering bar positioned against the second applicator to meter a predetermined amount of coating composition to the second applicator.

In some embodiments, the method further includes a second applicator positioned opposite the first applicator, and a second metering bar positioned against the second applicator to meter a predetermined amount of coating composition to the second applicator.

In one embodiment, the method further includes curing the composition coated on the edge face. In other embodiments, the method further includes drying the composition coated on the edge face.

In some embodiments, the method further includes substantially simultaneously transferring a coating composition to a first side of an article and a second side of the article opposite the first side of the article. In one embodiment, the article is a roll of tape and the method further includes substantially simultaneously transferring a coating composition to a first edge face of the roll of tape and a second edge face of the roll of tape.

In other aspects, the invention features an apparatus for coating an article, where the apparatus includes an applicator roller, a conveyor for sequentially transporting a plurality of articles to the roller and a metering bar positioned against the roller to meter a predetermined amount of coating composition to the roller for transfer to an article positioned between the roller and the conveyor.

The coating apparatus is capable of applying a reproducible coating weight to the surface of a series of articles upon each revolution of the applicator roller. The coating apparatus is well suited to coating the edge face of a roll of tape. The coating apparatus can coat articles that are spaced at irregular intervals on the conveyor that feeds the articles into the apparatus, i.e., the interval between articles to be coated can be varied. The apparatus is also well suited to applying a coating to a number of articles each having a surface to be coated that differs in dimension from the previous article.

The coating apparatus is constructed such that when an article is not available for coating, the liquid coating composition is not transferred from the roller. The coating apparatus is also capable of controlling the amount of coating composition applied to the roller such that overcoating, i.e., applying coating composition to surfaces other than the target surface, does not occur. In the case of rolls of tape, for example, the coating apparatus is capable of coating surface variations present at the edge face of the roll of tape, while avoiding coating the vertical surfaces of the roll of tape such as the cylindrical core of the roll and the exposed backing of the roll.

Other features and advantages will be apparent from the following description of the preferred embodiments thereof, and from the claims. In the figures, like numbers are used to represent like elements.

Brief Description of the Drawings

Fig. 1 is a side view of a coating apparatus.

Fig. 2 is a side view of the metering bar of the coating apparatus of Fig. 1.

Fig. 3 is a perspective view of the metering bar of Fig. 2.

Fig. 4 is a perspective view of a roll of tape.

Fig. 5 is a side view of a coating apparatus according to a second embodiment.

Fig. 6 is a top view of the coating apparatus of Fig. 5.

Fig. 7 is a side view of a coating apparatus according to a third embodiment.

Fig. 8 is a front perspective view of the metering bar and applicator roller of the coating apparatus of Fig. 7.

Fig. 9 is a front view of the metering bar of Fig. 8.

Fig. 10 is a side view of a second embodiment of a metering bar.

Fig. 11 is a perspective view of a third embodiment of a metering bar.

Fig. 12 is a side view of a coating apparatus that includes an endless belt.

Detailed Description

The coating apparatus is suitable for coating a variety of articles including articles having a variety of different shapes and sizes. For ease of description, however, the coating apparatus is described herein with respect to coating the edge face of a roll of tape.

Figs. 1-4 illustrate a coating apparatus 10 for applying a liquid coating composition 24 on an edge face 16 of a roll of tape 14. The coating apparatus 10 includes an applicator 18 in the form of a roller, a metering bar 22 in contact with the applicator roller 18 and a conveyor 26. The metering bar 22 is positioned such that an edge 33 of the metering bar 22 bears on the surface of the applicator roller 18. The metering bar 22 and applicator roller 18 combine to define a trough 42, which receives the liquid coating composition 24. The force with which the metering bar presses against the applicator roller 18 and the angle at which the arcuate end portion 31 of the metering bar 22 contacts the applicator roller 18 control the amount of coating composition 24 that is carried by the applicator roller 18 as it rotates past the metering bar 22 in a counter clock wise direction.

The conveyor 26 is positioned beneath the applicator roller 18 at a vertical distance from the applicator roller 18 sufficient to permit a roll of tape 14 positioned with an edge face 16 in contact with the conveyor 26 to pass between the applicator roller 18 and the conveyor 26. As the conveyor 26 moves, it transports a roll of tape 14 to the applicator

roller 18. As the leading edge of the roll of tape 14 enters the coating station 54, the applicator roller 18 contacts the edge face 16 and transfers a layer 12 of coating composition 24 to the edge face 16. The rotation of the applicator roller 18 in a counter clockwise direction provides fresh coating composition 24 to the edge face 16 as it travels through the coating station 54.

The liquid composition 24 is applied to the edge face 16 at a predetermined coating weight to provide a coating thickness "X"on the roll of tape. Suitable coating weights will vary depending upon factors related to the roll of tape including, e.g., the composition of the adhesive, the coating weight of the adhesive and the backing of the roll of tape and the surface variations on the edge face of the roll of tape. The apparatus 10 is capable of applying the liquid composition 24 to the edge face 16 without applying the composition to the interior of the central cylinder 32 or the major surface of the exposed backing 30 of the roll of tape 14.

Suitable applicator roller materials are conformable to the surface of the article being coated. The roller can include a single material extending through the body of the roller or multiple layers of material. Preferably the exposed roller material is sufficiently conformable to apply a substantially uniform layer of coating composition on a surface having height variations. The roller can also be constructed to include one material or a number of layers of the same or different material. Roller constructions that include multiple layers preferably have a conformable outer surface layer. The applicator roller can be made from a variety of materials including, e.g., nitrile rubber, vinyl modified nitrile rubbers, and urethane. The density of the applicator roller can also vary from a solid to a porous foam construction having open cell pores, closed cell pores, or a combination thereof. Useful rollers have a hardness of from about 12 Shore A to about 55 Shore A, preferably about 24 Shore A.

Alternately, the applicator can be an endless belt. Fig. 12 illustrates a coating apparatus 110 that includes an endless belt 118 that travels around two rotating pulleys 120, 124. A metering bar 122 applies a pressure against the endless belt 118. A coating composition 24 is fed to the nip between the metering bar 122 and the endless belt 118. As the endless belt 118 moves it transports coating composition 24 and applies coating composition 24 to an edge face 116 of a roll of tape 114, which is brought into position under the endless belt 118 by conveyor 126.

The metering bar 22 is a bar that is capable of controlling the amount of coating composition applied to the applicator roller 18 such that each revolution of the applicator roller carries substantially the same amount of coating composition for transfer to the article to be coated. A number of suitable metering bar constructions are available including, e.g., a doctor blade, a doctor blade that includes a gap (e.g., an adjustable gap) as shown, e.g., in Fig. 8, and a doctor blade that includes a rotatable rod as shown, e.g., in Fig. 11. The portion of the metering bar positioned against the applicator can have a smooth or patterned surface.

The metering bar 22 of Figs. 1-3 is in the form of a doctor blade having an arcuate end portion 31. The arcuate end portion 31 is positioned and exerts a force against the applicator roller 18 during the coating process. The arcuate end portion 31 is defined by a radius "R." The radius "R" of the doctor blade 22 can be used to alter the coating weight applied to the edge face 16 of the roll of tape 14. Increasing the radius of the arcuate end portion 31 of the doctor blade 22 can cause an increase in the hydraulic force at the nip between the doctor blade 22 and the applicator roller 18, which causes an increase in the coating weight applied to the edge face 16 of the roll of tape 14. Decreasing the radius R of the arcuate end portion 31 of the doctor blade 22 can decrease the coating weight applied to the edge face 16 of the roll of tape 14. Preferably the doctor blade has a radius of at least 2.5 mm, more preferably at least about 3 mm, most preferably from about 2.5 mm to about 80 mm.

The force exerted by the metering bar 22 against the applicator roller 18 can also alter the coating weight of the composition applied to the surface of the edge face. Increasing the force, for example, decreases the coating weight and decreasing the force increases the coating weight. Preferably the force exerted by the metering bar is from 0.25 lb/inch width to about 5.0 lb/inch width of the metering bar.

The coating apparatus can be used to transfer coating compositions having a wide range of viscosities including compositions having a viscosity of from about 15 centipoise (cps) to greater than 10,000 cps.

The coating apparatus can be constructed such that the applicator roller rotates continuously. The applicator roller can be connected to a motor capable of controlling the rotation as well as the rotation speed of the roller. When a roll of tape is not present in the

coating position, the applicator roller can continue rotating without depositing the coating composition.

Figs. 5 and 6 illustrate a second embodiment of a coating apparatus 40, which is part of a coating process that includes a coating station 54 and a finishing station 38. The coating apparatus 40 includes a second roller 52 positioned opposite the first roller 18 to enable simultaneous coating of the first and second edge faces 16, 56 of the roll of tape 14. The second roller 52 is also conformable to the surface variations present on edge face 56 and includes a conformable outer layer 60. As roller 52 rotates clockwise about its axis a metering bar 22a meters a predetermined amount of liquid composition 24 to the second roller 52.

A conveyor 46 feeds a roll of tape 14 into the space between the rollers 18, 52. The movement of the first roller 18 in a counter clockwise direction and the second roller 52 in a clockwise direction causes the roll of tape 14 to be taken up by and passed between the two rollers 18, 52. The rollers 18, 52 then transfer a layer 12 of liquid coating composition 24 to the opposite edge faces 16, 56 of the roll of tape 14 while simultaneously advancing the roll of tape 14 to the transport conveyors 34, 36.

The roll of tape 14 leaves the coating apparatus 40 via transport conveyors 34, 36, which include two endless belts 62, 64 traveling around rotating pulleys 70. The transport conveyors 34, 36 grip the roll of tape 14 as it exits from between the rollers 18, 52. The transport conveyors 34, 36 maintain the roll of tape 14 between them by friction. The roll of tape 14 is preferably maintained in a level position as it is transported from the coating station 54, past the blocking panel 66 and to a finishing station 38 by the transport conveyors 34, 36. The blocking panel 66 can block radiation, e.g., light or heat, transmitted from the finishing station 38 from reaching the coating station 54. As the roll of tape 14 passes through the finishing station 38 the layers 12 of coating composition 24 on the edge faces 16, 56 of the roll of tape 14 are treated, e.g., exposed to radiation 68 for a period sufficient to cure the layers 12 of coating composition 24 in the case of a curable coating composition or dried (e.g., by heat or air) in the case of a water-based or solvent-based coating composition. The roll of tape 14 is then transported out of the finishing station 38 to conveyor 48 for further processing including, e.g., packaging.

The coating apparatus is suitable for coating a variety of compositions including, e.g., solid (e.g., hot melt and radiation curable compositions), aqueous-based and solvent-

based compositions. The coating apparatus can coat compositions having a wide range of viscosities and is well suited to coating compositions having a viscosity from about 15 cps to about 15,000 cps, preferably no greater than about 10,000 cps, most preferably no greater than about 5,000 cps.

The coating apparatus is also suitable for coating a variety of articles having varying shapes and dimensions including, e.g., piece parts.

Other embodiments are within the claims. Figs. 7-9, for example, illustrate a coating apparatus 72 that includes a metering bar 74 in the form of a doctor blade 74 that includes a gap 76 in contact with applicator roller 78. The gap 76 meters the amount of coating composition 24 that is applied to the applicator roller 78. A gap doctor blade 74 is capable of applying a greater volume of coating composition to the applicator roller 18 relative to a doctor blade without a gap. A gap doctor blade is particularly useful for coating aqueous-based compositions.

Fig. 10 illustrates a metering bar 80 that includes an arcuate portion 82 defined by radius "R1" and having a straight edge. In use, the arcuate portion 82 of the metering bar 80 is in contact with the applicator roller 18.

Fig. 11 illustrates a metering bar 86 that includes a rotatable rod 88 disposed in the applicator-contacting end 90 of the metering bar 86. The rod 88 is capable of rotating about its longitudinal axis L. The rod 88 can be rotated at predetermined speeds, at predetermined intervals and in predetermined directions, to provide various functions including, e.g., refreshing the arcuate surface available for contact with the applicator, and cleansing the nip between the rod and the applicator. Cleansing the nip and refreshing the arcuate surface can help remove tracks and streaks formed on the applicator roller. The rotatable rod 88 is preferably a hard, dense material including, e.g., metal (e.g., steel, iron or aluminum and alloys thereof) and plastic.

60557-6983

CLAIMS:

1. A method of coating an article, comprising:

using a coating apparatus, the coating apparatus comprising

- a first applicator comprising a convex exterior surface,

- a conveyor for sequentially transporting a plurality of articles to said first applicator, and

- a metering bar comprising a fixed arcuate end positioned against said convex exterior surface of said convex exterior surface of said first applicator to meter a predetermined amount of coating composition to said first applicator for transfer from said convex exterior surface of said first applicator to an article transported to said first applicator by said conveyor,

said metering bar forming a nip with said convex exterior surface of said first applicator and exterting a force against said first applicator,

said predetermined amount of coating composition being determined, in part, by said force of said metering bar and a hydraulic force present at said nip;

applying a liquid coating composition to said first applicator; and

transferring said coating composition from said applicator to the article, wherein the article is a roll of tape and the method is used to coat the edge face of the roll of tape;

60557-6983

wherein said first applicator comprises an endless belt.

2. The method of claim 1, wherein said coating composition has a viscosity of at least about 15 cps.

3. The method of claim 1, wherein said coating composition has a viscosity of at least about 19 cps.

4. The method of claim 1, further comprising curing said coated composition.

5. The method of claim 1, further comprising drying said coated composition.

6. The method of claim 1, wherein the end of said metering bar positioned against said applicator has a radius of at least about 3 mm.

7. The method of claim 1, wherein the end of said metering bar positioned against said applicator has a radius of at least about 4 mm.

8. The method of claim 1, wherein said metering bar exerts a force of at least about 35 g/cm width against said applicator.

9. The method of claim 1, wherein said metering bar exerts a force of from about 45 g/cm width to about 900 g/cm width against said applicator.

10. The method of claim 1, further comprising a second applicator positioned to receive the article, and a second metering bar positioned against said second applicator to meter a predetermined amount of coating composition to said second applicator.

60557-6983

11. The method of claim 1, further comprising a second applicator positioned opposed said first applicator, and a second metering bar positioned against said second applicator to meter a predetermined amount of coating composition to said second applicator.

12. The method of claim 1, wherein said first applicator further comprises a roller, and said second applicator comprises a roller.

13. The method of claim 1, wherein said first applicator further comprises a roller, and said second applicator comprises an endless belt.

14. The method of claim 1, further comprising substantially simultaneously transferring a coating composition to a first side of an article and a second side of the article opposite said first side of the article.

15. The method of claim 1, wherein said article comprises a roll of tape, said method further comprising substantially simultaneously transferring a coating composition to a first edge face of said roll of tape and a second edge face of said roll of tape.

16. An apparatus for coating an article, said apparatus comprising:

a first applicator comprising a convex exterior surface;

a conveyor for sequentially transporting a plurality of articles to said first applicator; and

a metering bar comprising a fixed arcuate end positioned against said convex exterior surface of said first applicator to meter a predetermined amount of coating composition to said convex exterior surface of said first applicator for transfer from said convex exterior surface of said first applicator to an article transported to said applicator by said conveyor,

said metering bar forming a nip with said convex exterior surface of said first applicator and exerting a force against said first applicator,

60557-6983

said predetermined amount of coating composition being determined, in part, by said force of said metering bar and a hydraulic force present at said nip; and

wherein said first applicator comprises an endless belt.

17. The apparatus of claim 16, further comprising a second applicator and a second metering bar positioned against said second applicator to meter a predetermined amount of coating composition to said second applicator, said second applicator being positioned to receive the article from said conveyor.

18. The apparatus of claim 17, wherein said first applicator comprises a roller and said fixed arcuate end of said metering bar is positioned against said roller.

19. The apparatus of claim 18, wherein said second applicator comprises a roller.

20. The apparatus of claim 18, wherein said second applicator comprises an endless belt.

21. The apparatus of claim 17, wherein said apparatus is capable of substantially simultaneously

a) transferring a coating composition from said first applicator to a first side of the article, and

b) transferring a coating composition from said second applicator to a second side of the article opposite said first side of the article.

22. The apparatus of claim 17, wherein the article is a roll of tape and said apparatus is capable of substantially simultaneously

a) transferring a coating composition from said first applicator to a first edge face of a roll of tape, and

b) transferring a coating composition from said second applicator to a second edge face of the roll of tape opposite said first edge face of the roll of tape.

60557-6983

23. The apparatus of claim 17, wherein said first applicator and said second applicator are positioned to maintain the article between said first applicator and said second applicator.

24. A system for manufacturing coated articles, said system comprising

a first station comprising a coating apparatus comprising

a first applicator comprising a convex exterior surface,

a conveyor capable of sequentially transporting a plurality of articles to said first applicator, and

a metering bar positioned against said convex exterior surface of said first applicator to meter a predetermined amount of coating composition to said convex exterior surface of said first applicator for transfer from said convex exterior surface of said first applicator to an article transported to said first applicator by said conveyor,

said metering bar forming a nip with said convex exterior surface of said first applicator and exerting a force against said first applicator,

said predetermined amount of coating composition being determined, in part, by said force of said metering bar and a hydraulic force present at said nip,

a second station for solidifying the coating composition disposed on the article;

wherein said first applicator comprises an endless belt.

25. The system of claim 24, further comprising a second applicator positioned to receive the article from said conveyor, and a second metering bar positioned against said second applicator to meter a predetermined amount of coating composition to said second applicator.

26. The system of claim 24, further comprising a second applicator positioned opposite said first applicator, and a second metering bar positioned against said second

60557-6983

applicator to meter a predetermined amount of coating composition to said second applicator.

27. The system of claim 26, wherein said first applicator comprises a roller and said second applicator comprises a roller.

28. The system of claim 26, wherein said first applicator comprises an endless belt.

29. A system for manufacturing coated articles, said system comprising

a first station comprising a coating apparatus comprising

a first applicator comprising an endless belt,

a conveyor capable of sequentially transporting a plurality of articles to said first applicator, and

a metering bar positioned against said first applicator to meter a predetermined amount of coating composition to said first applicator for transfer to the article transported to said first applicator by said conveyor said metering bar comprising a fixed arcuate end positioned against said first applicator forming a nip with said first applicator and exerting a force against said first applicator, said predetermined amount of coating composition being determined, in part, by said force of said metering bar and a hydraulic force at said nip;

a second applicator positioned to receive the article from said conveyor, and a second metering bar positioned against said second applicator to meter a predetermined amount of coating composition to said second applicator, wherein said second applicator is positioned opposite said first applicator; and

a second station for solidifying the coating composition disposed on the article.

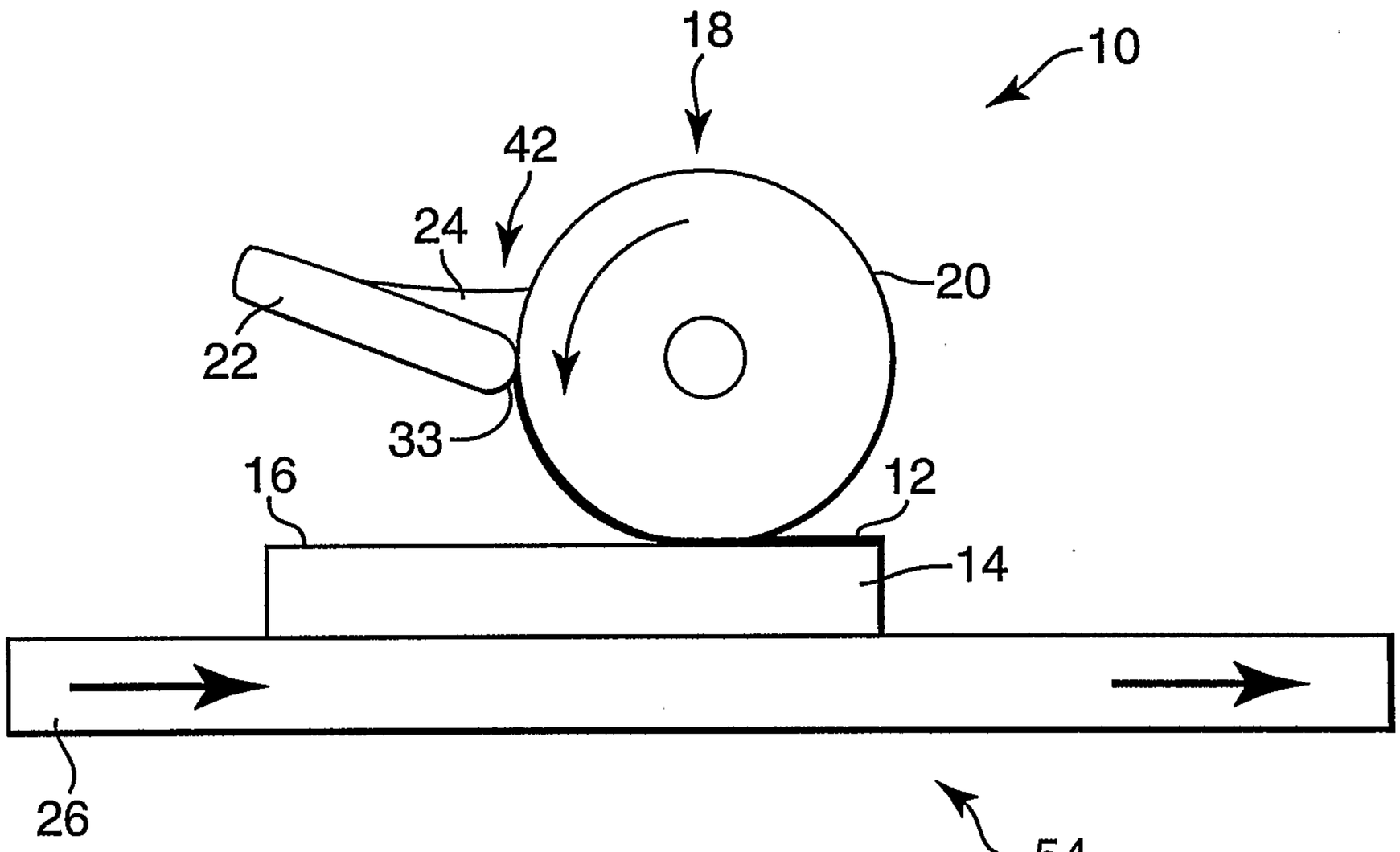

FIG. 1

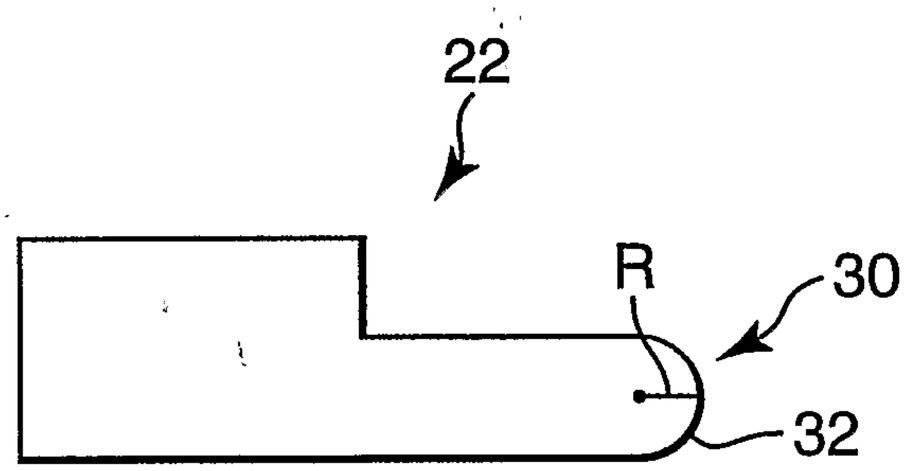

FIG. 2

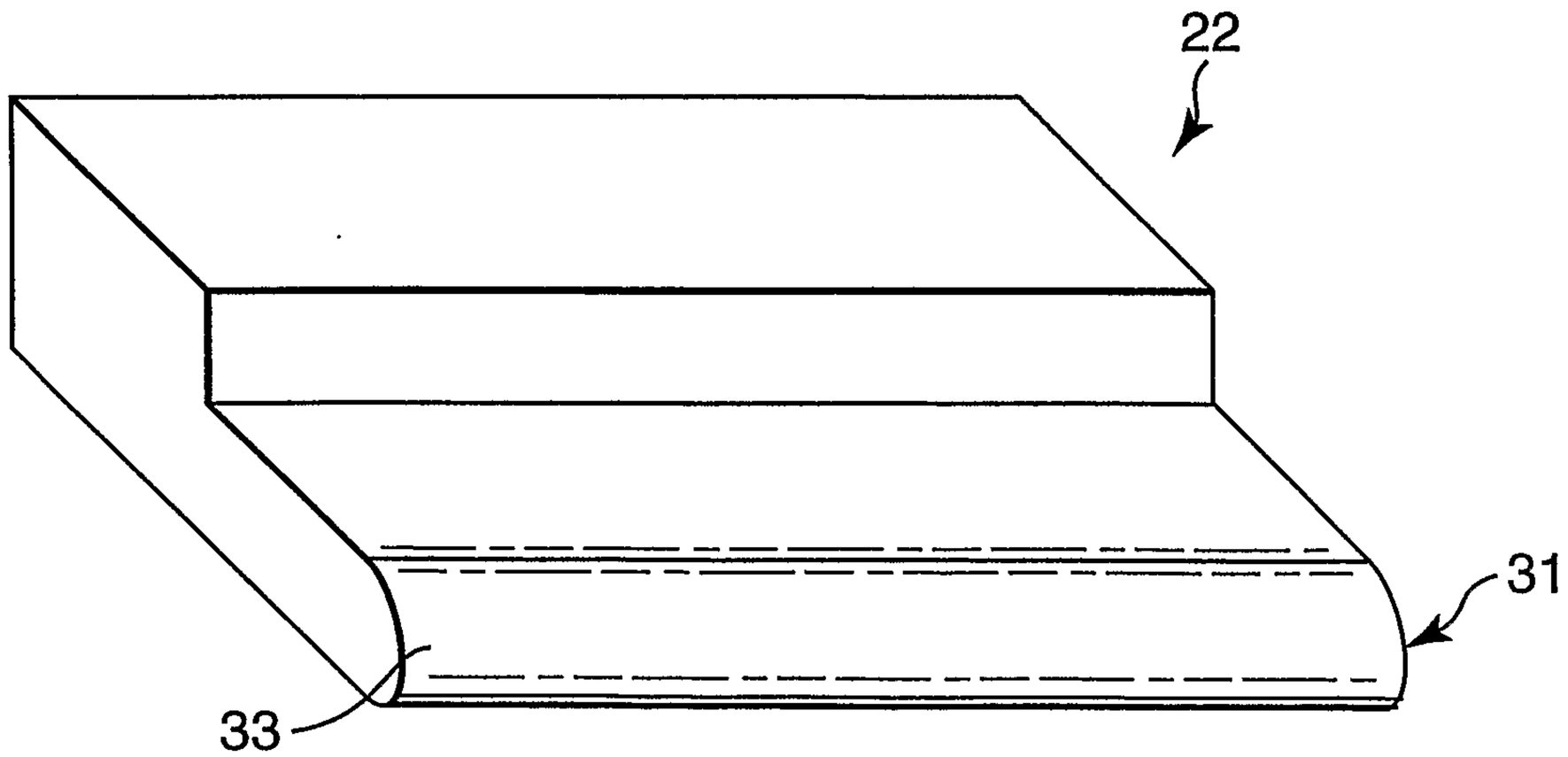

FIG. 3

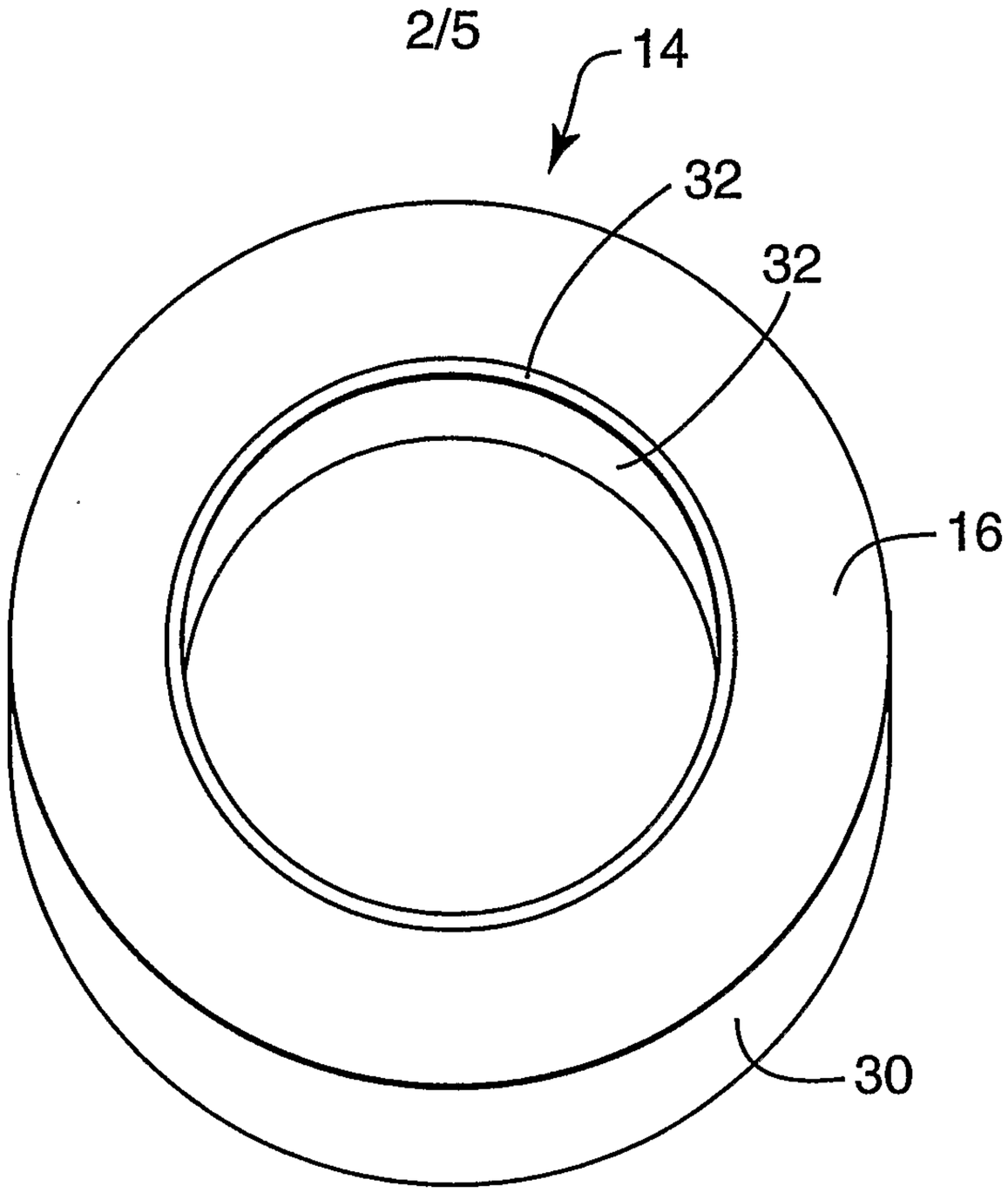
14
32
32
16
30

FIG. 4

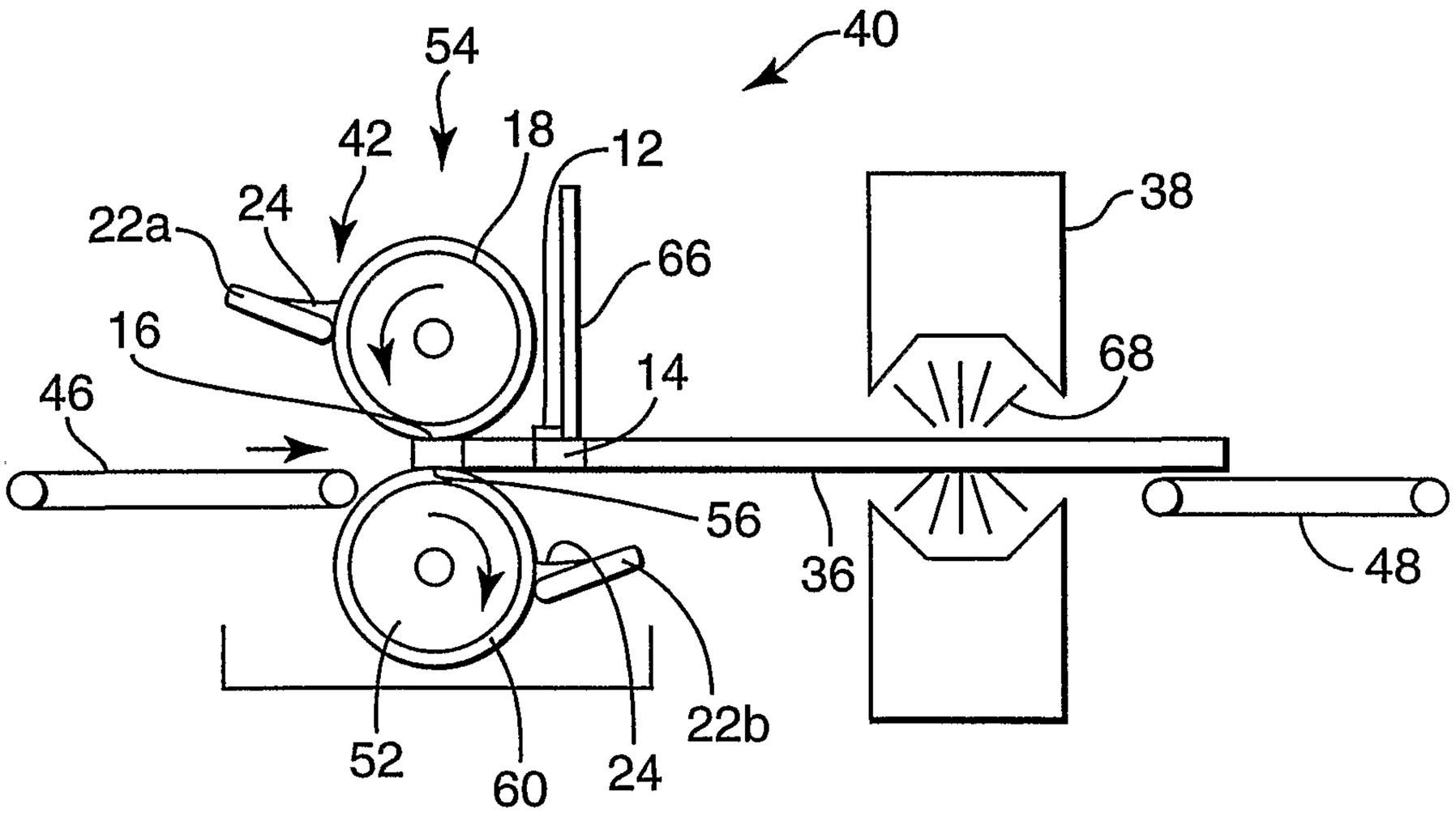
40
54
42
18
12
24
22a
66
38
16
68
14
46
56
36
48
22b
52
60
24

FIG. 5

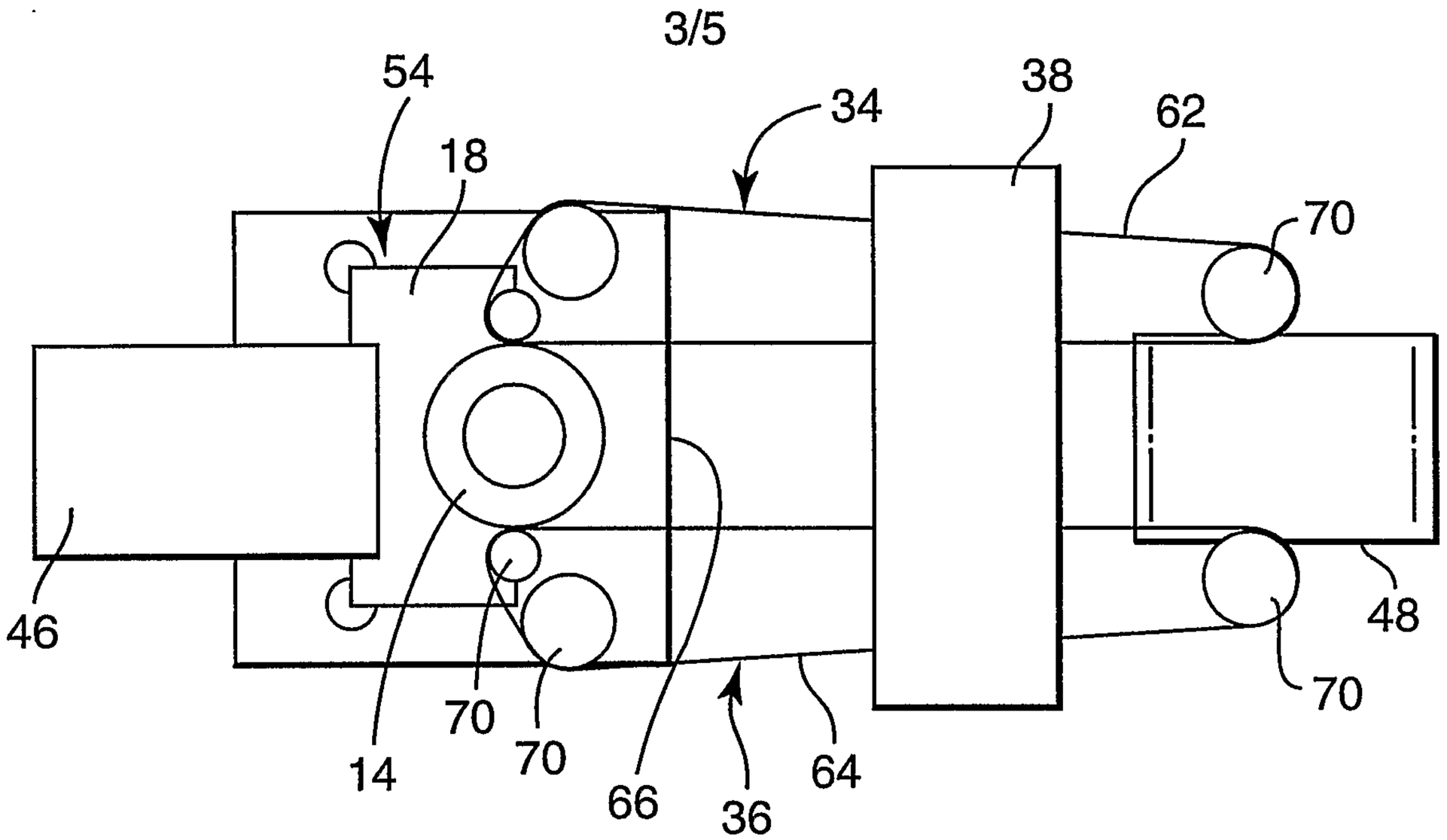

FIG. 6

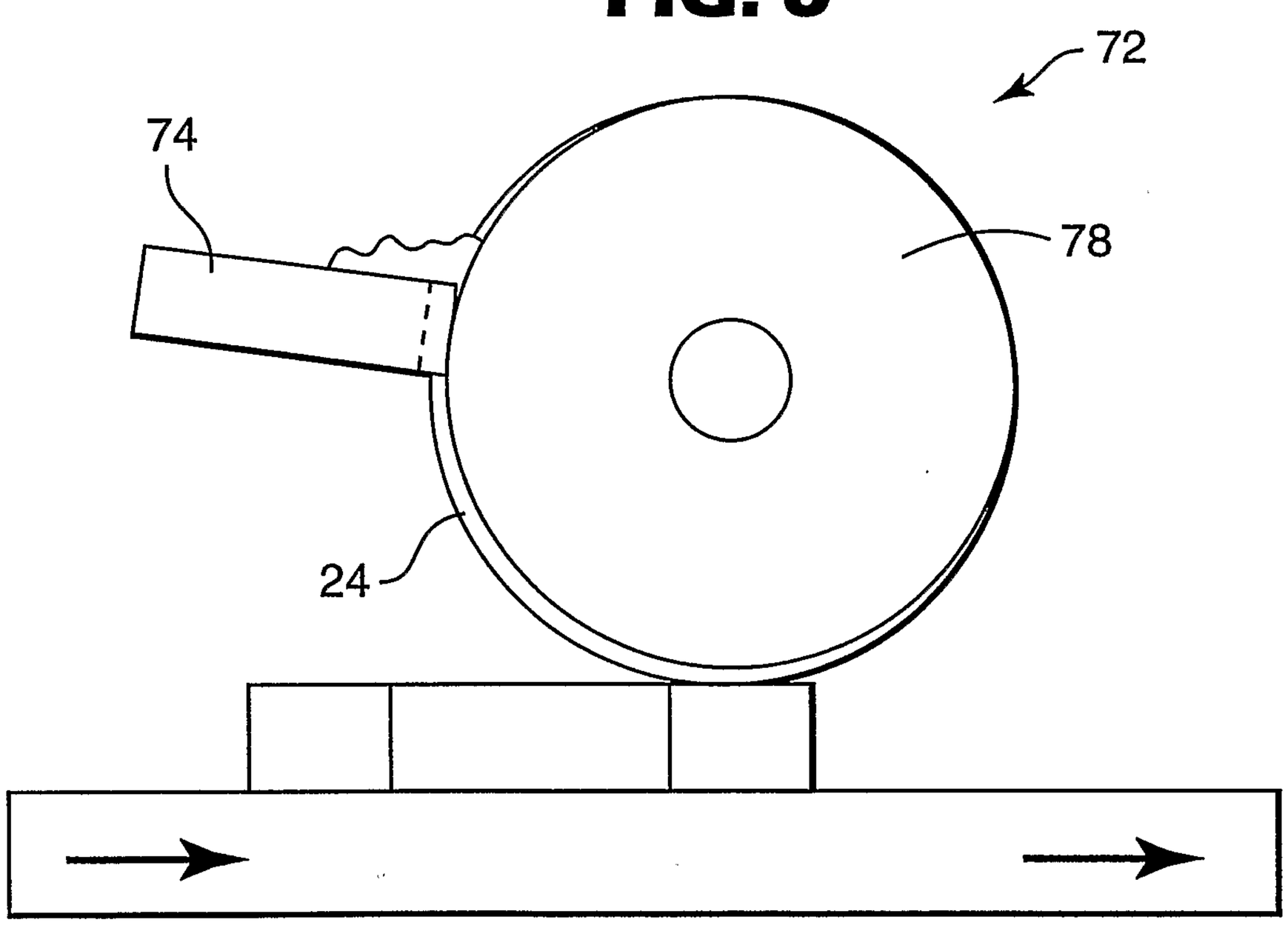

FIG. 7

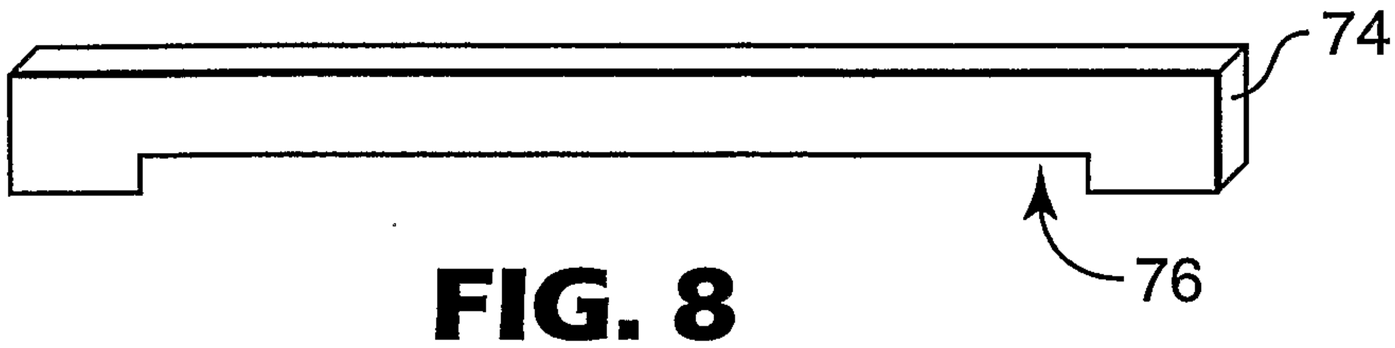

FIG. 8

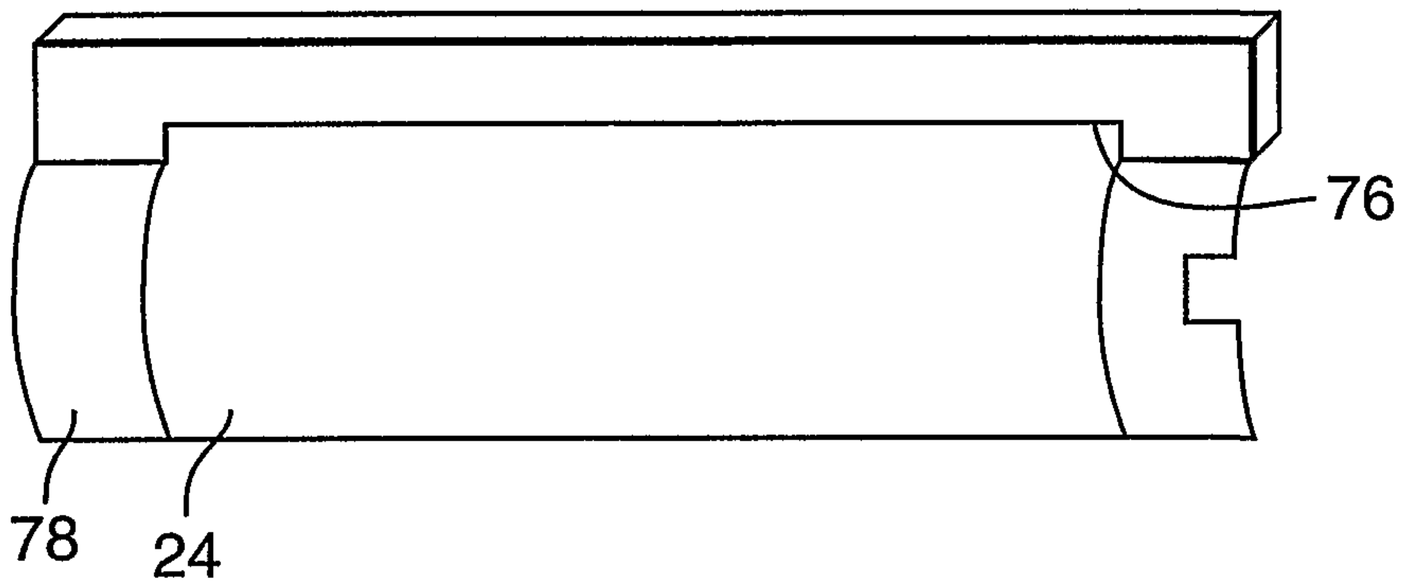

FIG. 9

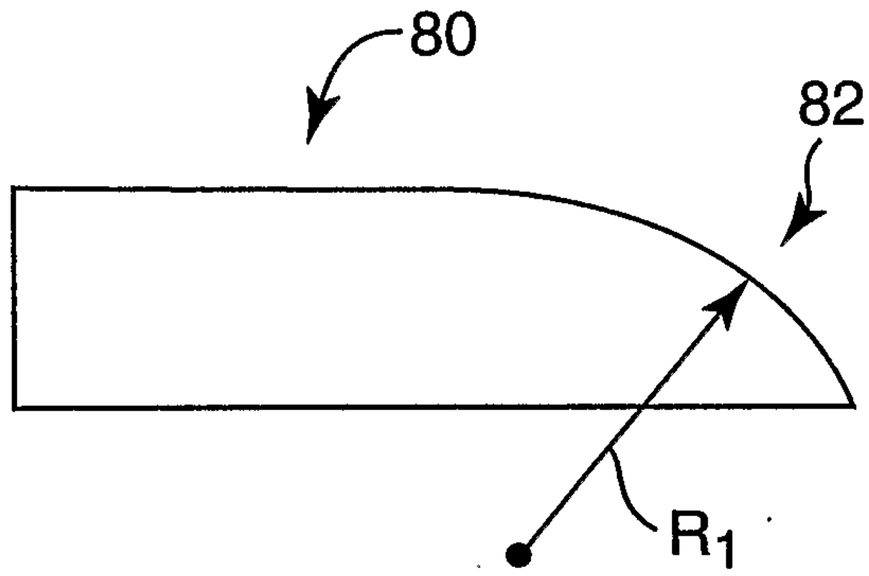

FIG. 10

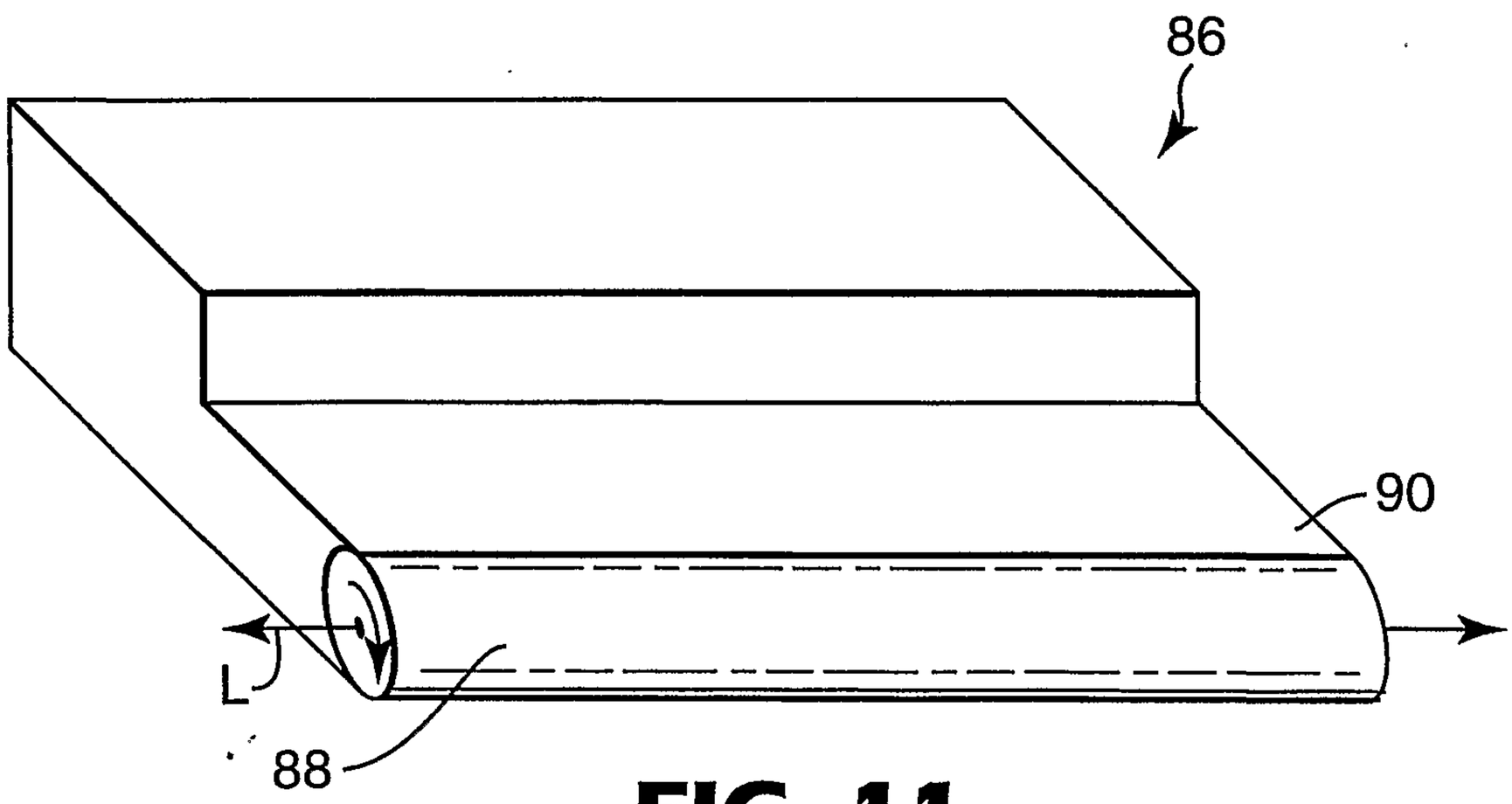

FIG. 11

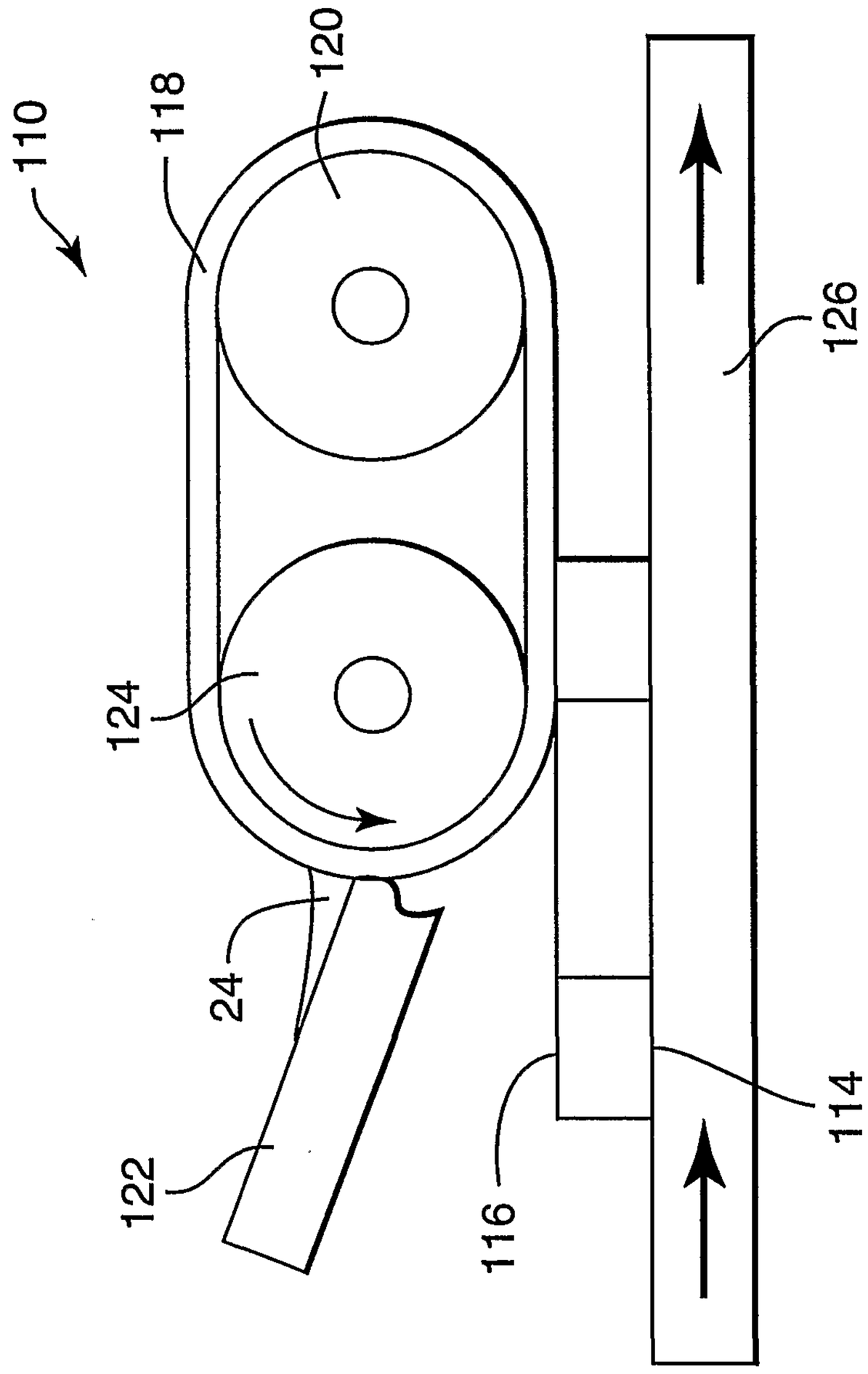

FIG. 12

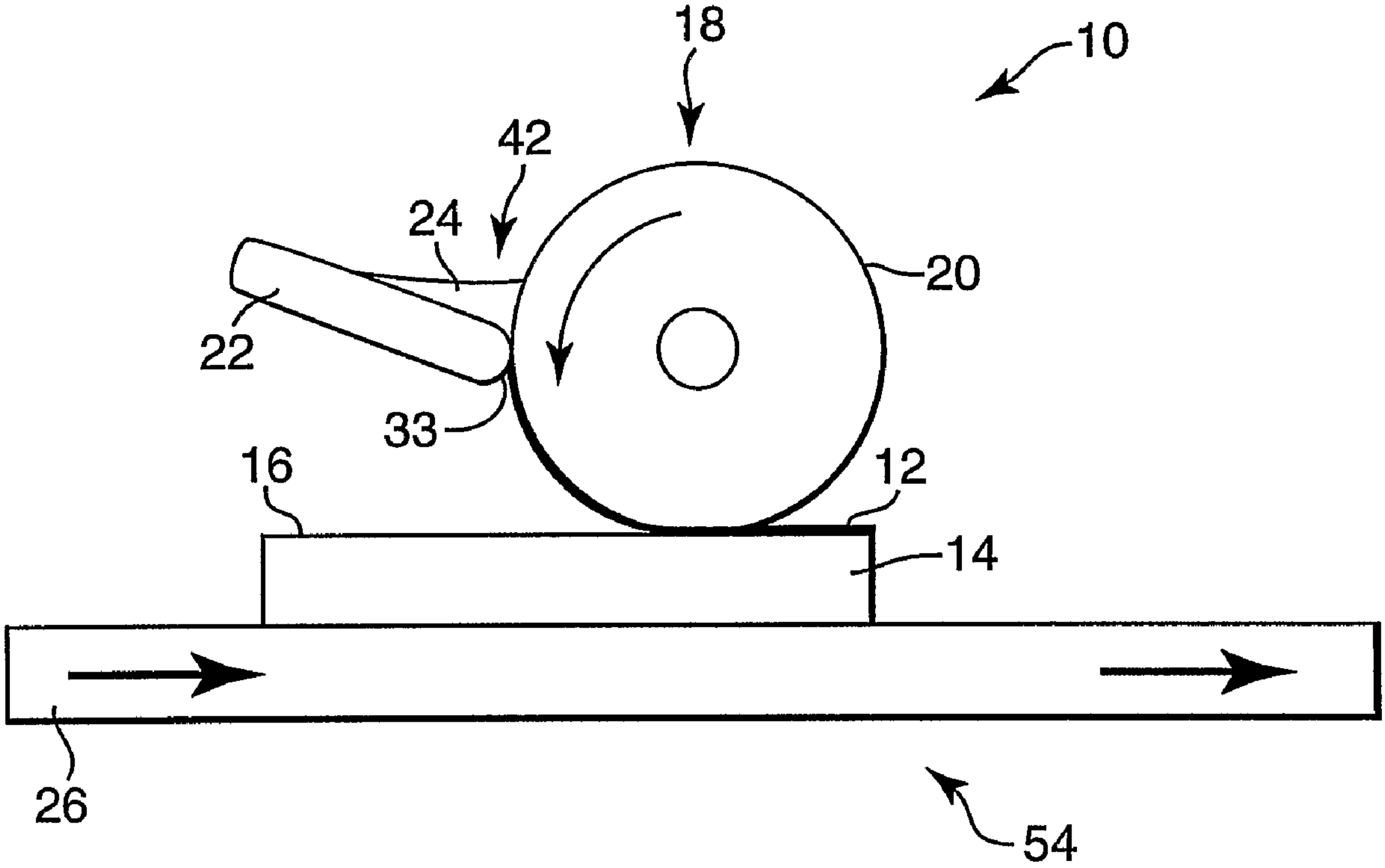
18
10
42
24
20
22
33
16
12
14
26
54