2 Sheets—Sheet 1.

W. M. WOOD, Jr.

FIRE-ARMS.

No. 193,906. Patented Aug. 7, 1877.

Fig. 1.

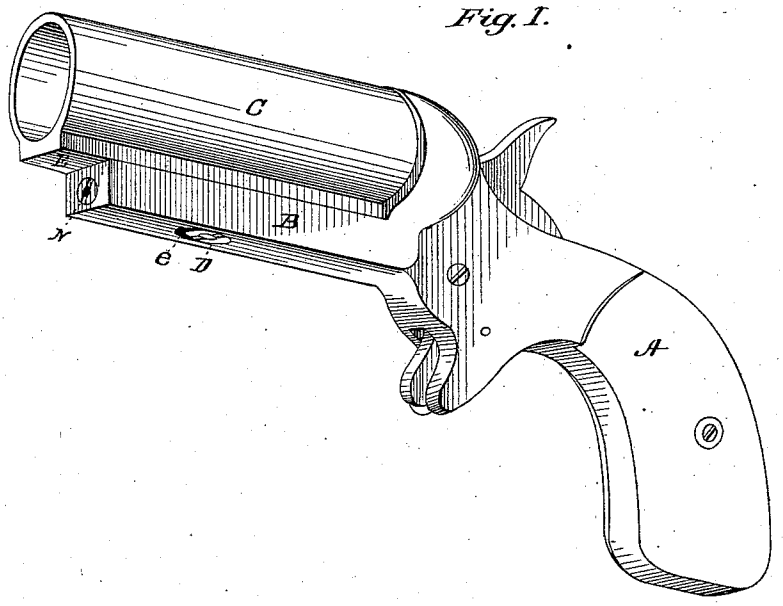

Fig. 2.

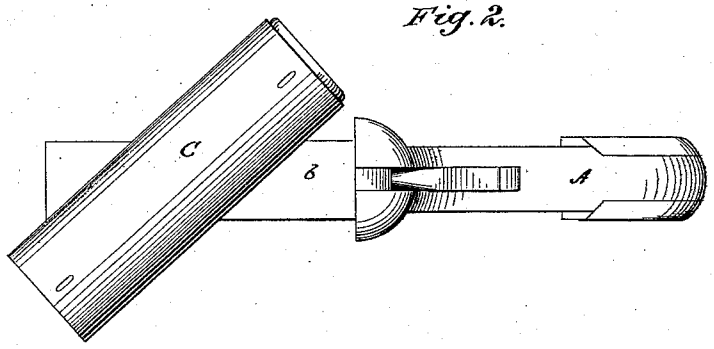

Witnesses:

Clarence Poole

W. C. Guy

Inventor:

Wm. M. Wood Jr.

Jno. altys.

A. H. Evans & Co.

N. PETERS, PHOTO-LITHOGRAPHER, WASHINGTON, D. C.

2 Sheets—Sheet 2.

W. M. WOOD, Jr.

FIRE-ARMS.

No. 193,906. Patented Aug. 7, 1877.

Fig. 3.

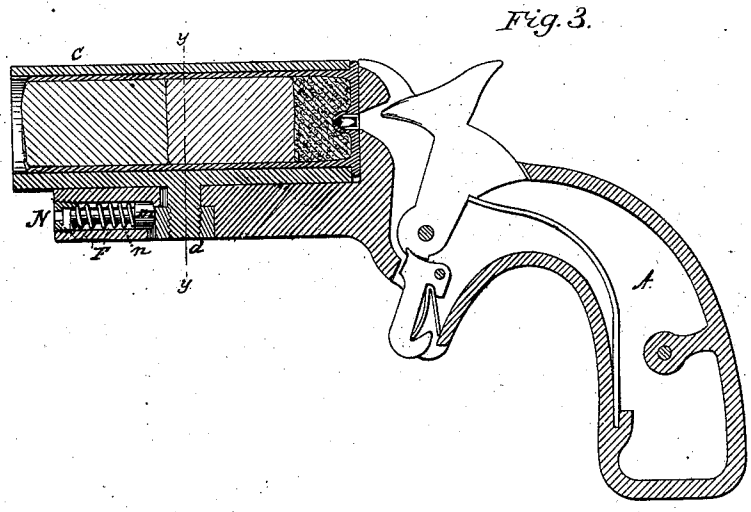

Fig. 4.

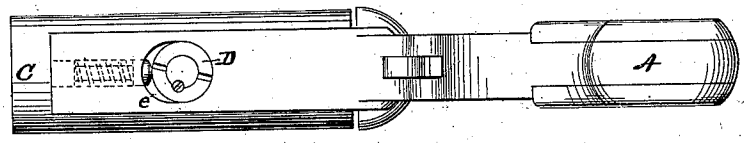

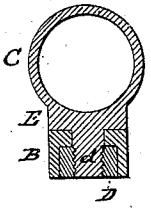

Fig. 5.

Witnesses:

Clarence Poole

M. E. Guy

Inventor:

Wm. M. Wood Jr.

per attys

A. H. Evans & Co

N. PETERS, PHOTO-LITHOGRAPHER, WASHINGTON, D. C.

UNITED STATES PATENT OFFICE.

WILLIAM M. WOOD, JR., OF WASHINGTON, DISTRICT OF COLUMBIA.

IMPROVEMENT IN FIRE-ARMS.

Specification forming part of Letters Patent No. **193,906**, dated August 7, 1877; application filed February 14, 1877.

To all whom it may concern:

Be it known that I, WILLIAM M. WOOD, Jr., of Washington, District of Columbia, have invented a new and useful Improvement in Fire-Arms, of which the following is a clear, full, and exact description, reference being had to the accompanying drawings, making a part of this specification, in which—

Figure 1 represents a pistol with my improvements attached. Fig. 2 is a top view of the same, with the barrel partially revolved on its pivot. Fig. 3 is a longitudinal section of the same. Fig. 4 is a view from beneath, showing the nut on the pivot-pin. Fig. 5 is a cross-section through *y y* of Fig. 3.

My invention relates to that class of fire-arms used for throwing signal-lights into the air; and it consists in the combination of devices, hereinafter explained and claimed.

To enable others to make and use my invention, I will proceed to describe the exact manner in which I have carried it out.

In the drawings, A represents the handle of the pistol, provided with the usual percussion-lock, and having a flat stock, B, of nearly equal length with the barrel C, which is constructed with a flat rib, E, on its under side, of equal width with the upper flat surface *b* of the stock, so that when the barrel is in line with the stock the flat sides of the rib will be exactly flush with the flat sides of the stock, as shown in Fig. 5.

The barrel C is constructed with a central pivot-pin, *d*, on the under side of the rib E, which pin is held in an oval slot, *e*, in the stock by means of the nut D. The slot *e* is made oval or elongated, for a purpose hereinafter explained.

The stock B has a longitudinal recess, F, extending from its front end rearward until it enters the vertical slot *e*, and in this recess is placed the headed bolt *m*, provided with the spiral spring *n*, and secured in position by the hollow screw-cap N fitting into the outer end of the recess.

The head of the bolt *m* is held in contact with the pivot-pin *d*, and by the spiral spring, and the pin *d* is forced to the rear portion of the oval slot *e* when the barrel is in position for firing.

The object in making the pivot hole or slot *e* oval or elongated is to allow the barrel to move to the front as it is turned off the line of fire. Otherwise the breech-block would have to be made concave, and the ends of the barrel convex to suit the radius of the half-barrel. This concavity and convexity of parts would necessitate a careful forming of the base of the signal-case or cartridge to correspond, which would be both difficult and expensive.

It is evident that by my construction the barrel will move to the front sufficiently to allow the flat base of the cartridge to move to a proper position square against the flat shoulder of the breech-block, when it will be held by the bolt *m* and spring *n*, with the cap of the case against the firing-pin, thus avoiding the necessity of the usual catch or securing-spring.

The barrel B is usually made the exact length of the signal-case or cartridge, whereby the introduction of a new signal at one end of the barrel expels the empty case at the other, when the barrel is partially revolved to receive the new charge. Hence the loading and extracting the empty case are simultaneous, and the result of a single movement.

The object in making the sides of the stock exactly flush with the flat sides of the rib on the barrel is an important one.

Signals are used in the darkness of the night, when the operator has to be guided alone by the sense of touch. Under such circumstances he is enabled to determine with entire accuracy that the barrel is in proper position for firing by passing the fingers along the barrel and ascertaining that the faces of the stock and rib coincide.

Having thus explained my invention, what I claim as new, and desire to secure by Letters Patent, is—

The pivoted barrel C, provided with the pin *d*, in combination with the stock B, provided with the oval or elongated slot *e*, longitudinal recess F, bolt *m*, and spring *n*, all constructed to operate substantially as and for the purpose set forth.

WILLIAM M. WOOD, JR.

Witnesses:
G. H. EVANS,
W. E. GUY.