Oct. 12, 1948. E. R. POWELL 2,450,914

APPARATUS AND PROCESS FOR THE MANUFACTURE OF MINERAL WOOL

Filed Sept. 16, 1943

Fig. 1.

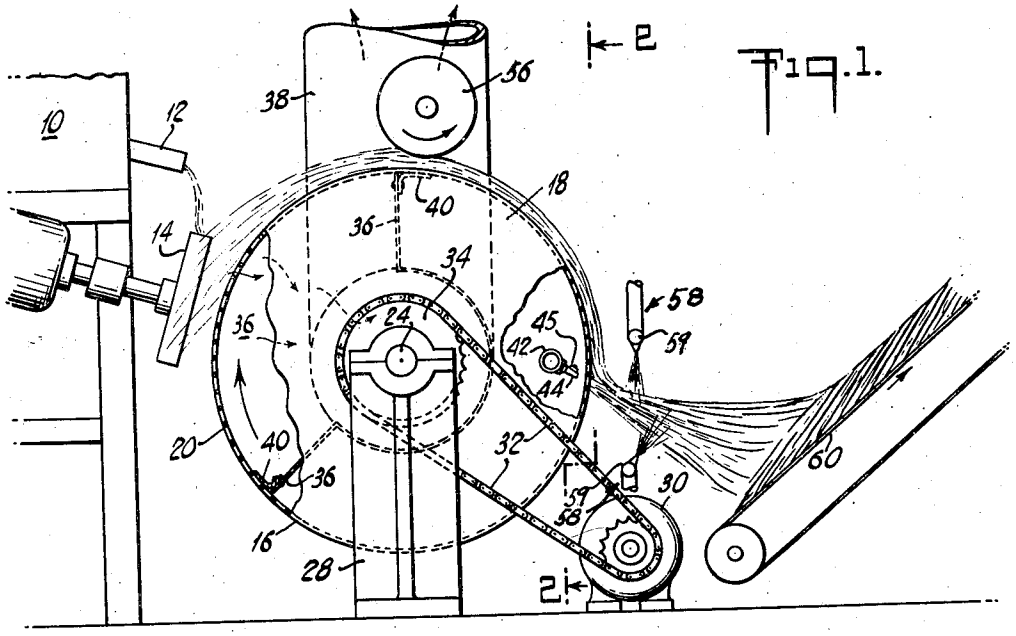

Fig. 2.

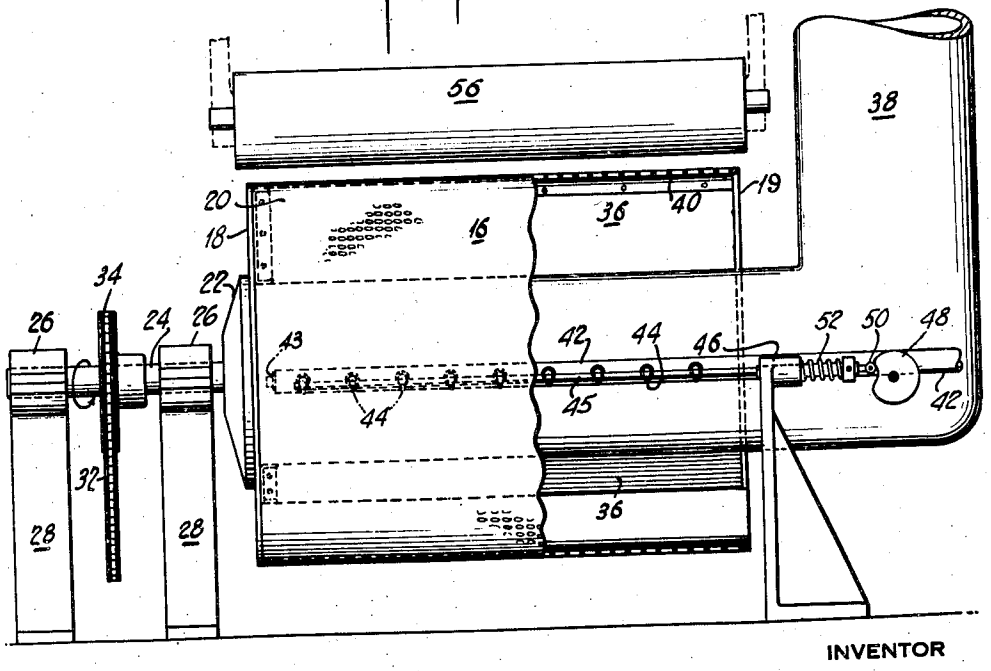

INVENTOR

EDWARD R. POWELL.

BY Virgil C. Kline

ATTORNEY

Patented Oct. 12, 1948 2,450,914

UNITED STATES PATENT OFFICE

2,450,914

APPARATUS AND PROCESS FOR THE MANUFACTURE OF MINERAL WOOL

Edward R. Powell, North Plainfield, N. J., assignor to Johns-Manville Corporation, New York, N. Y., a corporation of New York

Application September 16, 1943, Serial No. 502,572

14 Claims. (Cl. 154—27)

1

My present invention relates to the manufacture of mineral wool, and more particularly to an improved apparatus and method for converting molten raw material into fibers and for forming a mat or felt therefrom. The term "mineral wool" is employed herein in a generic sense to include wool or fibers formed from rock, slag, glass, mixtures thereof, and like raw materials.

Heretofore mineral wool has been made in a number of ways including the conventional method of disintegrating molten material into a multiplicity of fibers by the action of a high pressure steam jet, and gathering the fibers on the floor of a blow chamber adjacent the fiberizing means. More recently it has been proposed to fiberize the molten material by the use of a spinner or rotor, rotated at high speed, upon which the material impinges and by which it is broken up into drops or masses which are thrown from the spinner by centrifugal force to be drawn into fiber or thread form. The principal object of the invention is the provision of an apparatus and method employed in conjunction with the spinning operation to provide both improved fibers and improved fibrous felts or mats.

Another object of the invention is the provision of a method and apparatus in which longer, finer fibers are produced from the molten material.

A further object of the invention is the provision of a method and apparatus for forming an improved felt or mat of spun mineral wool fibers. A still further object is the provision of such felt or mat including a substantially uniformly disseminated binder material. More particularly the invention resides in means for initially gathering the spun fibers on a rapidly moving body whereby the fibers are further elongated and drawn out, and the resuspension of the fibers in the form of a thin layer in air or other gaseous medium. While the fibers are in this state the binder is applied in the form of a spray or the like, and the fibers or fibrous layer thereafter collected in the form of a relatively thick blanket or felt.

My invention will be more fully understood and further objects and advantages thereof will become apparent when reference is made to the more detailed description thereof, which is to follow, and to the accompanying drawings, in which:

Fig. 1 is a diagrammatic side elevational view of an apparatus in accordance with the invention; and

Fig. 2 is a sectional view, with parts broken away for clearness of illustration, taken on a line 2—2 of Fig. 1.

2

Referring now to the drawings, there is shown an apparatus comprising a melting furnace 10. The furnace illustrated is of the cupola type, but it will be understood that any other suitable type of melting furnace, such as a tank furnace, may be employed, if desired. The furnace includes a discharge trough 12, by which a stream of molten slag, rock, glass or other fiber forming material is drawn from the furnace and is discharged in position to be contacted by one or more rotors 14, rotating at high speed. The rotors may be of the type, illustrated in my copending application, Serial No. 485,009, filed April 29, 1943 which issued as United States Patent No. 2,428,810 on October 14, 1947. The molten material striking the rotor or rotors is broken up into fine drops which are thrown out from the rotors at a high velocity and converted into fiber form.

In accordance with the instant invention, a drum 16 is mounted for rotation in a direction indicated by the arrow, relatively closely adjacent the fiberizing rotors. Drum 16 includes a foraminous surface made, for example, of a relatively coarse mesh screen or the like. Preferably, however, a perforated metal sheet or sheets are employed. Metal sheets having perforations 1 inch in diameter and substantially uniformly spaced on 1¼ inch centers have been successfully employed to form the drum wall. It will be understood, however, that the invention is not limited to any particular type, size or spacing of the perforations. The drum is supported for rotation in a suitable manner to permit of the inclusion within the drum of a suction hood and other means to be described. For this purpose, the drum may, as shown, have an end plate 18 carrying the foraminous peripheral wall 20. End plate 18 is secured as by plate 22 to a shaft 24, mounted for rotation within bearings 26 of supports 28. Shaft 24 is adapted to be driven at high speed in any suitable manner, as for example by a motor 30 operatively connected to the shaft through chain 32 and sprocket 34.

Within drum 16 there is provided a suction hood 36, connected by means of a suction main 38 with an air exhausting device (not shown). The suction hood is positioned to draw air through a considerable area of the foraminous surface of the drum adjacent the fiberizing means 14. The hood 36 is sealed against the surface of the cylinder, and against end member 18, as by flexible wipers 40. The other end of the hood is closed by end member 19. Extending inside the cylin-

der and at the other side of the cylinder from the fiberizing area is a pipe 42, adapted to be connected to a source of air or other gaseous fluid under pressure and supported in a fixed position in any suitable manner. The inner end of the pipe is closed off with a cap, plug or the like 43. The length of the pipe extending within the drum is provided with a plurality of air jet nozzles 44 of any suitable type. As shown, the nozzles may comprise individual members connected into pipe 42 by ball and socket joints to permit the outer ends of the nozzles to be moved. A bar 45 is supported for reciprocation in a suitable bar support 46 and is pivotally connected to the several nozzles. The bar is adapted to be reciprocated by means of a cam 48 driven from any suitable source of power (not shown), the cam acting on a follower 50 carried by the bar. A spring 52 may be employed to maintain the follower in contact with the cam or any other conventional cam and follower construction may be used to achieve this purpose. It will be understood that the invention is not limited to the particular construction shown, and, that other suitable means may be employed to substantially continuously vary the direction of the air jets issuing from the nozzles.

In certain instances it is desirable to provide a press roll, as indicated at 56, supported for rotation above cylinder 16, whereby the fibers collected on cylinder 16 are compacted and densified to some extent as they pass between the two rolls. Roll 56 may preferably be driven at substantially the same peripheral velocity as drum 16.

One or more binder applying devices 58 are preferably supported adjacent drum 16 in position to spray a suitable binder on the fibers after leaving drum 16. Preferably one is located above and one below the discharged stream of fibrous material. Each device 58 may comprise an elongated spray head 59 connected to a binder supply source. The spray head may be of a conventional type adapted to spray any one of the binders conventionally employed, such as asphalts, drying oils, resins, waxes, etc., in relatively finely divided, droplet form.

An inclined conveyor 60, preferably somewhat wider than drum 16, is located adjacent the drum in position to receive the material discharged from the drum. The conveyor is driven from any suitable power source (not shown), and at a speed determined by the rate of production of the fibers and the character and thickness of the felt or mat to be formed.

In the operation of the apparatus in accordance with the invention, suction box 36 is connected through duct 38 with any desired exhausting means to create a flow of air through the foraminous surface of the drum as it passes the open side of the suction box. Drum 16 is rotated at a relatively high speed, such as to have a surface speed, say of from 600 to 2,000 feet per minute. Air or other gaseous fluid under pressure is supplied to pipe 42 and escapes as a plurality of jets through the nozzles 44, the jets blowing through the foraminous surface of the drum at the side adjacent conveyor 60.

As the molten material delivered by trough 12 strikes the high speed rotor or rotors 14, it is divided into minute droplets or pellets and thrown from the rotor by centrifugal force to be drawn out into relatively fine threads. Due to the movement of air through the foraminous surface of the drum created by suction box 36, the

outer ends of the fibers are substantially immediately attracted to the surface of the drum and, due to the high speed of rotation of the drum, the fibers are further drawn out and extended, with the result that a longer, finer fiber is produced than with the use of the rotors alone. Also a high fiber yield is obtained.

The fibers are collected on the surface of the drum in the form of a thin, low density, open lap or layer. It has been found in practice that the layer thus formed is, at least for the most part, relatively narrow and of varying position on the drum. The layer is carried by rotation of the drum in front of the nozzles 44. Through a combination of the centrifugal forces created by rotation of the drum and the action of the jets issuing from the nozzles, the layer or lap is stripped from the drum and, due to its low density, is suspended in the air stream created by the jets and driven toward the conveyor 60. The surface of the drum is left relatively clean. Due to the change of direction of the jets by the reciprocation of the nozzles, the lap or layer is directed back and forth across the conveyor 60 to reassemble it thereon and to build up a substantially uniform body or felt, the thickness of which may be controlled by regulation of the speed of conveyor 60. Suitably the layer is built up to provide a thickness of the final product of from ½" to 4". During the interval that layer of fibers is suspended in the air stream, a binder of any suitable type, as previously referred to, may be sprayed on to the fibers through sprayheads 59. Due to the thin and open characteristics of the layer at this stage, the binder is well distributed throughout it. In the felt or blanket built up on conveyor 60 the binder is found to be substantially uniformly disseminated whereby, in the final product, a coherent batt or blanket is obtained.

In addition to the advantages obtained by the present apparatus and process in superior fiberization, felting, and binder distribution, the invention has the advantage that the binder is applied when the fibers are comparatively cool. That is, as distinguished from conventional processes, the binder does not contact the incandescent molten material or portions of the apparatus heated above the flash point of the binder. Consequently, ignition loss of binder is greatly reduced and also a more efficient binding of the fibers is achieved.

The blanket or felt formed on the conveyor 60 may be compressed to the extent desired and treated in any suitable way to set the binder in accordance with known practice, such treatment depending of course on the type of binder employed. The blanket may then be trimmed and divided into batts or the like to adapt it to commercial uses.

Having thus described my invention in rather full detail, it will be understood that these details need not be strictly adhered to, but that various changes and modifications will suggest themselves to one skilled in the art, all falling within the scope of the invention as defined by the subjoined claims.

What I claim is:

1. In a mineral wool apparatus having means for disintegrating a stream of molten material into fibers, a drum including a fiber receiving area adjacent said means, a foraminous surface on said drum, means for rotating said drum, and means for blowing a current of a gaseous medium through said foraminous surface at a point re-

mote from said fiber receiving area whereby said fibers are forced from said drum.

2. In a mineral wool apparatus having means for disintegrating a stream of molten material into fibers, a drum including a fiber receiving area adjacent said means, a foraminous surface on said drum, a suction device behind said fiber receiving area, and means for blowing a current of a gaseous medium through said foraminous surface at a point remote from said fiber receiving area.

3. In a mineral wool apparatus having means for disintegrating a stream of molten material into fibers, a drum including a fiber receiving area adjacent said means, a foraminous surface on said drum, suction means behind said fiber receiving area and acting therethrough, means for rotating said drum at high velocity, means for blowing a current of a gaseous medium through said foraminous surface at a location remote from said fiber receiving area whereby said fibers are removed from said drum, and means for spraying a binder into said fibers upon removal from said drum.

4. In a mineral wool apparatus including means for disintegrating a stream of molten material into fibers, a drum including a fiber receiving area adjacent said means, a foraminous surface on said drum, suction means behind said fiber receiving area and acting therethrough, means for rotating said drum at high velocity, means for blowing a current of a gaseous medium through said foraminous surface at a location remote from said fiber receiving area whereby said fibers are removed from said drum in the form of a thin layer suspended in air, means for spraying a binder into said suspension of fibers, and a conveyor positioned to receive said fibers from said suspension in the form of an interfelted layer.

5. In a mineral wool apparatus having a rotor for disintegrating a stream of molten material into fibers, a drum having a foraminous surface mounted for rotation adjacent said rotor and in position to receive fibers thereon, suction means operating through said foraminous surface adjacent said rotor, a pipe extending substantially the length of said drum and at a location removed from the fiber receiving portion of the drum behind said foraminous surface, said pipe including a plurality of nozzles positioned to discharge a gaseous medium through said surface.

6. In a mineral wool apparatus having a rotor for converting molten material into fibers, a drum having a foraminous surface, said drum being located adjacent the rotor, suction means operating through the foraminous surface of the drum adjacent the rotor, means for rotating said drum at high speed, and means within said drum and at a location remote from said rotor for causing a flow of a gaseous medium in a varying direction outwardly through said foraminous surface.

7. In a mineral wool apparatus having a rotor for converting molten material into fibers, a drum having a foraminous surface, said drum lying adjacent the rotor, suction means operating through said foraminous surface adjacent said rotor, means for rotating said drum at high speed, an air pipe within said drum at a location remote from said rotor and including a plurality of nozzles positioned to direct air jets through said foraminous surface, and means for longitudinally reciprocating said nozzles.

8. In a mineral wool apparatus including rotor fiberizing means for converting a molten material into fibers, said means being supported for rotation in a plane to expose a peripheral edge portion to the molten material, an air-pervious fiber receiving member having a fiber receiving area located closely adjacent said rotor means and projecting beyond the periphery thereof, suction means acting through said area, means for moving said member at high speed relative to the rate of fiber formation to collect the fibers in the form of a thin, narrow layer thereon, means for forcing said layer from said member, and means for assembling the fibers of said layer into a thicker, wider, fibrous body.

9. In a mineral wool apparatus including rotor fiberizing means for converting a molten material into fibers, said means being supported for rotation in a plane to expose a peripheral edge surface to the molten material, a rotatable drum having an air-pervious peripheral surface with a fiber receiving area thereof located closely adjacent the rotor means and projecting beyond the periphery thereof, suction means acting through said area, means for rotating said drum at high speed relative to the rate of fiber formation to collect the fibers in the form of a thin, narrow layer thereon, means for forcing the layer from the drum, and means for assembling the fibers of said layer into a thicker, wider fibrous body.

10. In a mineral wool apparatus including rotor fiberizing means for converting a molten material into fibers, said means being supported for rotation in a plane to expose a peripheral edge surface to the molten material, a rotatable drum having an air-pervious peripheral surface with a fiber receiving area thereof located closely adjacent the rotor means and projecting beyond the periphery thereof, suction means acting through said area, means for rotating said drum at high speed relative to the rate of fiber formation to collect the fibers in the form of a thin, narrow layer thereon, means for forcing the layer from the drum, means to deposit a binder on the layer, and means for assembling a thicker, wider, fibrous body from the layer.

11. In a mineral wool apparatus including rotor fiberizing means for converting a molten material into fibers, said means being supported for rotation in a plane to expose a peripheral edge to the molten material, a drum having an air-pervious fiber receiving surface area located closely adjacent the rotor means and projecting beyond said means, means for rotating said drum at a peripheral velocity above 600 feet per minute, suction means acting through said area, and means for forcing the fibers from the drum and assembling them in the form of a body.

12. In a method including converting a molten material into fibers by discharging the material onto a peripheral edge surface of a rotor fiberizing means, the steps comprising, directing the ends of the fibers substantially as they are formed onto a surface moving past said rotor means at high speed and in close proximity thereto to collect the fibers on such surface in the form of a thin, narrow layer, removing the layer from said surface and assembling the fibers thereof into a relatively thick, wide body.

13. In a method including converting a molten material into fibers by discharging the material onto a peripheral edge surface of a rotor fiberizing means, the steps comprising, directing the ends of the fibers substantially as they are formed onto a surface moving past said rotor means at a speed of above 600 feet per minute and in close proximity thereto to collect the fibers on such surface in the form of a thin, narrow layer, re-

moving the layer from said surface and assembling the fibers thereof into a relatively thick, wide body.

14. In a method including converting a molten material into fibers by discharging the material onto a peripheral edge surface of a rotor fiberizing means, the steps comprising, directing the ends of the fibers substantially as they are formed onto a surface moving past said rotor means at high speed and in close proximity thereto to collect the fibers on such surface in the form of a thin, narrow layer, removing the layer from said surface, depositing a binder on the layer and assembling the layer in a relatively thick, wide body.

EDWARD R. POWELL.

REFERENCES CITED

The following references are of record in the file of this patent:

Number	Name	Date
180,470	Elbers	Aug. 1, 1876
1,958,819	Grayson	May 15, 1934
2,016,401	Thomas	Oct. 8, 1935
2,110,280	Vieweg	Mar. 8, 1938
2,127,287	Carson	Aug. 16, 1938
2,188,373	Pearce	Jan. 30, 1940
2,192,944	Thomas	Mar. 12, 1940
2,202,030	Siegfried	May 28, 1940
2,230,271	Simpson	Feb. 4, 1941
2,274,130	Davis	Feb. 24, 1942
2,288,072	Collins	June 30, 1942
2,318,244	McClure	May 4, 1943
2,325,940	Coss	Aug. 3, 1943
2,333,218	Von Pazsiczky	Nov. 2, 1943
2,382,290	Callander	Aug. 14, 1945

FOREIGN PATENTS

Number	Country	Date
32,813	Netherlands	Apr. 17, 1934