Oct. 7, 1941. J. NOVITSKY 2,258,391

PLATING RACK

Filed March 7, 1939 2 Sheets-Sheet 1

Fig. 1.

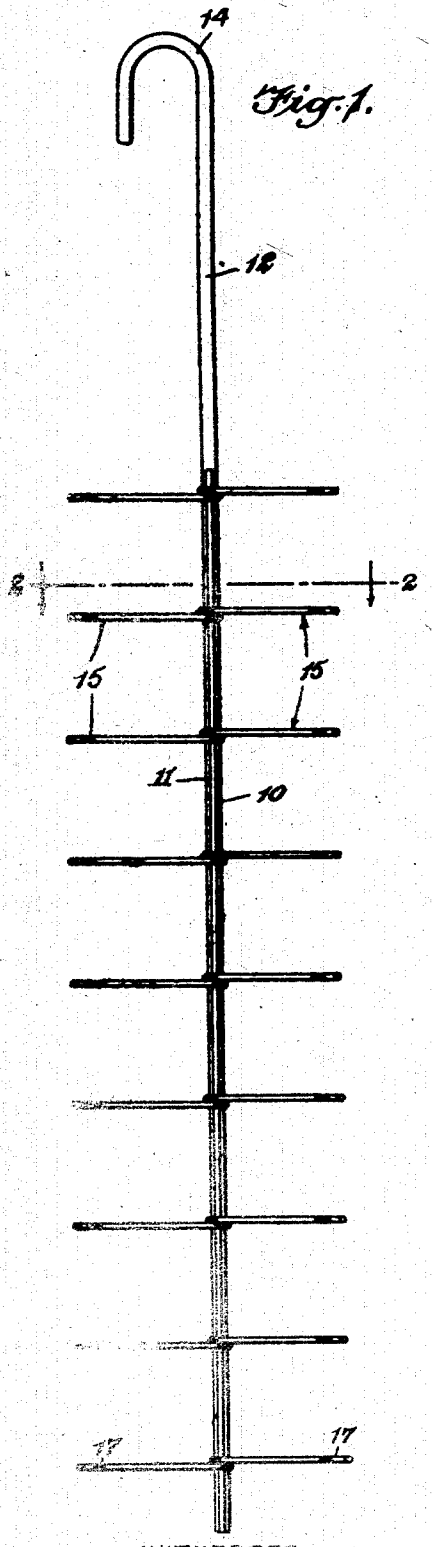

Fig. 2.

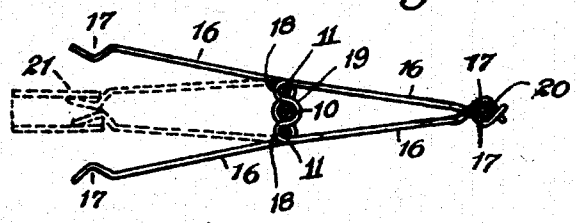

Fig. 3.

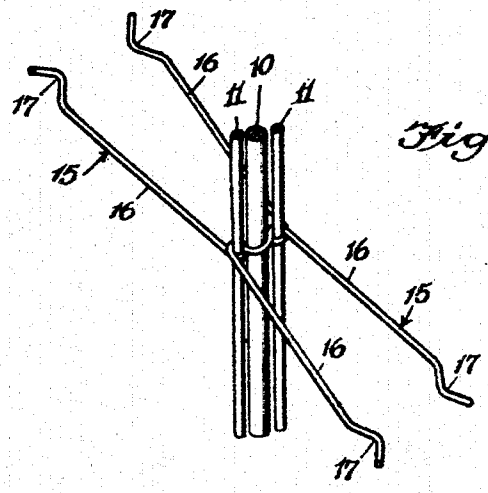

Fig. 4.

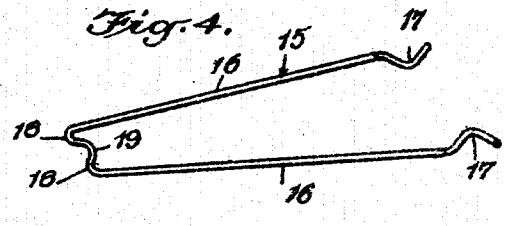

Fig. 5.

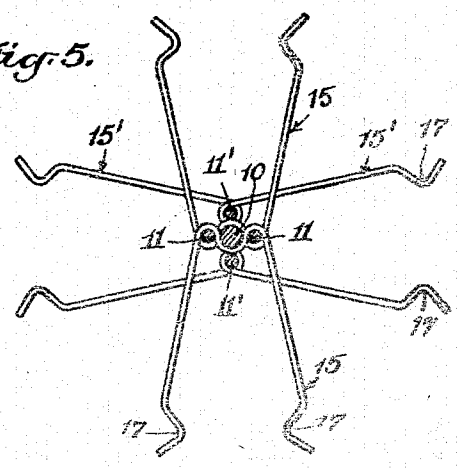

WITNESSES

Geo. M. Naylor

D. H. Kane

INVENTOR

Joseph Novitsky

BY

Munn, Anderson & Liddy

ATTORNEYS

Oct. 7, 1941. J. NOVITSKY 2,258,391

PLATING RACK

Filed March 7, 1939 2 Sheets-Sheet 2

Fig. 6.

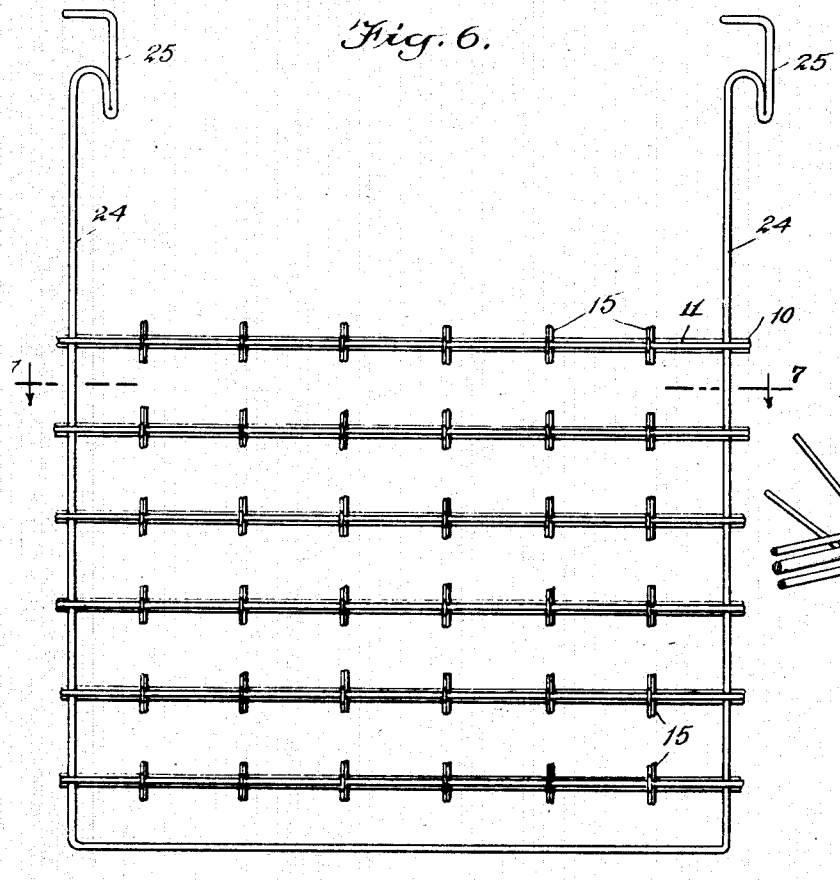

Fig. 8.

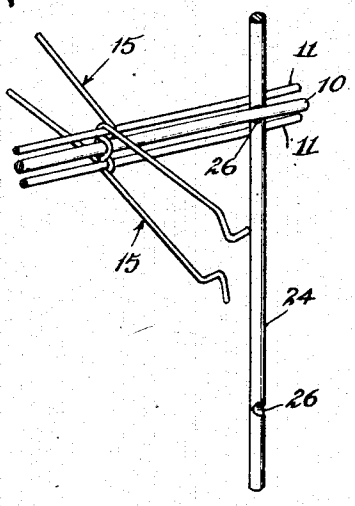

Fig. 7.

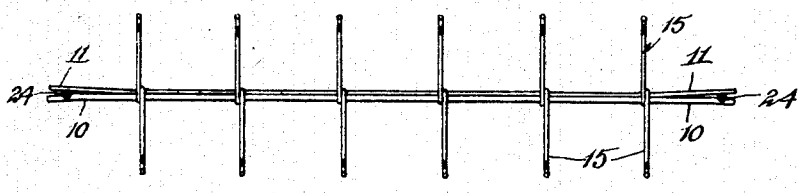

Fig. 9.

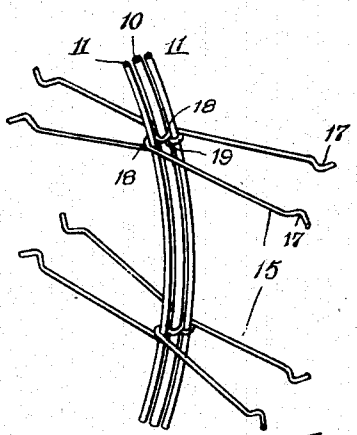

WITNESSES

George Naylor

D. H. Kane

INVENTOR

Joseph Novitsky

BY

Munn, Anderson & Liddy

ATTORNEYS

Patented Oct. 7, 1941 2,258,391

UNITED STATES PATENT OFFICE

2,258,391

PLATING RACK

Joseph Novitsky, New York, N. Y.

Application March 7, 1939, Serial No. 260,267

2 Claims. (Cl. 204—297)

This invention relates to improvements in plating racks or the like and more particularly to a plating rack for suspending or holding articles in an electric plating bath.

It is an object of the invention to provide an improved plating rack which may be formed in a variety of shapes and sizes and in which the several parts may be held together by means of friction alone thereby eliminating welding, soldering, drilling, screws, rivets, or the like.

It is a further object to provide an improved plating rack of the above character which may be used to hold or suspend many different types of articles which it is desired to electroplate with a minimum of interference with the surface to be plated.

Another object is the provision of an improved electroplating rack which is free from sharp bends or angles so that a coating of insulating material may readily be applied thereto, if desired.

Among other objects is the provision of an improved plating rack of simple, economical construction which is easy to assemble and yet which will be able to withstand substantial usage with comparative freedom from breakage or wear.

In the accompanying drawings—

Fig. 1 is an elevational view of a plating rack embodying my invention;

Fig. 2 is a sectional view in the direction of the arrows on the line 2—2 of Fig. 1 indicating the manner in which the prongs on my rack may be used to hold or suspend articles.

Fig. 3 is a detailed view in perspective of a portion of the rack showing the manner in which the prongs are connected to the supporting cores or rods;

Fig. 4 is a detailed view of one of the sets of prongs employed in my rack.

Fig. 5 is a cross sectional view of a modified form of rack;

Fig. 6 is a front elevation of another modified form of my invention in which a plurality of racks are supported from a single frame;

Fig. 7 is a sectional view in the direction of the arrows on the line 7—7 of Fig. 6;

Fig. 8 is a detailed view showing the manner in which the racks are supported from the frame in the form of my invention shown in Fig. 6; and

Fig. 9 shows a further modified form of my invention in which the supporting cores or rods are curved.

My improved rack consists primarily of a plurality of supporting cores or rods having gripping prongs intertwined or interlaced therewith in such a manner as to hold the several parts in assembled relationship by means of friction alone. Referring now to the first four figures of my drawings it will be seen that I have provided three parallel supporting cores or rods, the central core or rod indicated by the numeral 10 being of somewhat greater diameter than the two auxiliary cores or rods 11 which are disposed on opposite sides of the central core or rod. The rods may be formed of any material suitable for use in electroplating racks, more specifically a metal such as copper, bronze, or the like. The central core or rod 10 preferably extends upwardly beyond the smaller rods as indicated at 12 and may be provided with a hooked portion 14 at the top thereof whereby the rack may be suitably supported in the electroplating bath.

As previously stated, the prongs which are indicated generally by the numeral 15 are intertwined or interlaced with the cores 10 and 11 in such a manner as to hold the cores and prongs in assembled relationship. Each of the sets of prongs comprises an elongated strand of resilient material such as copper, bronze, or the like bent so as to provide diverging arms 16 having outwardly facing hooked portions 17 at the ends thereof. The inner ends of the prongs are provided with the looped portions 18 for extending around the cores 11 and the intermediate oppositely disposed loop portion 19 adapted to extend in front of the central core 10. In this way, as clearly shown in Figs. 2 and 3, the prongs may be intertwined or interlaced with the cores 10 and 11 much in the manner of the filler threads of a piece of textile fabric. The sets of prongs are preferably formed in pairs extending in opposite directions and in this way the loops 18 and 19 of adjacent prongs intertwine with the cores 10 and 11 in opposite relationship with the result that the cores and prongs are firmly held in position. In the drawings the prongs are shown as made of strands which are round in cross section. However, it should be understood that they may be made of relatively flat strips or of strands of any desired cross sectional shape.

It will be appreciated that the length of the cores and the relative spacing, arrangement, and number of the prongs 15 may be varied, it merely being required that some of the prongs face in one direction and other of the prongs face in the opposite direction in order to obtain the desired intertwining relationship.

In using my improved plating rack any arti-

cle which it is desired to electroplate is attached to or supported from the prongs 15 and the rack is suspended in the electroplating bath and the process is conducted in the usual manner. My prongs may be used for holding articles of many different types. Thus, as shown on the right hand side of Fig. 2, by compressing the two arms 16 of a prong so that they overlap and the hooked portions 17 are disposed in confronting relationship, an elongated member such as a rod 20 may be inserted between the hooked portions and it will be firmly clamped in position. So as to hold the rod 20 in vertical relationship it may be thus hooked between two or more vertically aligned sets of prongs 15 in the manner illustrated in Fig. 2. As shown in dotted lines in the left hand side of the Fig. 2 a hollow tubular member such as the crown cap 21 may be held in position by compressing the arms 16 of one set of prongs and inserting them inside the member. Due to the inherent resiliency of the prongs the tubular member will be firmly held in position. In addition to supporting articles in the manner illustrated in Fig. 2 strings or the like may be attached to the article and suspended from the prongs or in some instances the article may be hung or suspended from one of the arms of a set of prongs.

My improved rack may be made in a variety of different shapes and forms. Thus as shown in Fig. 5, in addition to providing the central core 10 and auxiliary cores 11 I may also provide two additional auxiliary cores 11' disposed on opposite sides of the core 10 and corresponding in size and structure to the auxiliary cores 11. The cores 11' are preferably disposed intermediate the two cores 11 with the result that an auxiliary core is disposed on each of four sides of the center core 10. Prongs 15' corresponding to the prongs 15 are intertwined with the cores 11' and 10 projecting from opposite sides thereof in a manner corresponding to the arrangement of the prongs 15 and their associated cores 11 and 10. Alternate prongs 15' preferably project from opposite sides of the rack so that it will be seen that prongs project from four sides of the rack at angles of 90 degrees with respect to each other. The rack shown in Fig. 5 may be supported in any desired manner as, for instance, by the arrangement shown in Fig. 1. Articles to be electroplated are assembled on the prongs 15 and 15' in the same manner as in the first form of my invention.

Instead of supporting each rack from a separate supporting hook 14 I may mount a plurality of racks on a single frame as shown in Figs. 6 to 8. Thus it will be seen that I provide a plurality of racks arranged in parallel relationship and supported in a unitary U-shaped frame 24 the two ends of which may be hooked and shaped as shown at 25 so as to provide convenient means for suspending the frame in an electroplating bath. The frame 24 may be made of similar material to the cores 10 and 11. The rack shown in Figs. 6 and 8 are similar in construction to the rack shown in the first four figures of my drawings comprising a center core 10, auxiliary cores 11 and prongs 15 interlaced therewith. However, it will be seen that the center core is not provided with an extension 12 and hooked handle 14 but, on the contrary, all of the cores are of the same length. Each of the racks are frictionally supported on the two sides of frame 24 in the manner shown most clearly in Fig. 8 with the end of core 10 disposed on one face of the frame member and the ends of the two auxiliary cores 11 disposed on the opposite face so as to provide a clamping action. To firmly hold the racks against accidental shifting relative to each other the frame member 24 may be notched at intervals as shown at 26. When assembled the racks are arranged so that the central cores 10 engage the notches 26 as shown.

In an arrangement such as shown in Figs. 6 to 8 the frame may be supported by the hooked portions 25 so that the racks are disposed in the electroplating bath. The articles to be electroplated are supported on the prongs 15 in the manner previously described.

The modification of my invention shown in Fig. 9 illustrates that the cores may be curved or formed to any desired shape. Thus, as shown, the central core 10 and auxiliary cores 11 are curved in an arcuate shape, the prongs 15 being secured thereto in the same manner as previously described. If desired, in the modification shown in Fig. 9 the cores may be curved so as to form a continuous loop or circle.

Each of the modified forms of my invention are used in the manner previously described with the prongs engaging the articles to be electroplated and the entire rack suspended in the electroplating bath. Where it is desired to use the rack as an anode rack suitable insulation may be interposed between the cores or rods 10, 11 and 11' and the prongs 15 and 15'. It will be appreciated that an insulating coating material such as Korolac may also be readily applied to the racks in the usual manner when desired.

From the foregoing description of the several forms of my invention it will be appreciated that I have provided an improved rack of simplified economical construction which may be formed in a variety of shapes and sizes which eliminates drilling and the use of welding, soldering, screws, rivets, and the like and which is easy to manufacture and assemble. It will also be appreciated that the articles to be plated are supported by the rack in such a manner so as to provide a minimum of interference or obstruction to the surface to be plated.

It should be understood, of course, that modifications may be made in the illustrated and described embodiments of my invention without departing from the invention as set forth in the accompanying claims. Thus the cores or rods 10, 11 and 11' and the prongs 15 need not be cylindrical in shape but might be made from stock which is polygonal or of any desired cross section shape. Where the cores or rods are made of stock which is polygonal in cross section or of irregular shape the prongs are preferably bent so as to conform to this shape so as to make a tighter contact between the members.

I claim—

1. A plating rack comprising three elongated cores arranged in substantially parallel relationship, and a plurality of prongs for supporting articles to be plated, each of said prongs comprising a strand of resilient wire interlaced with said cores by extending the wire substantially half way around each of the outer cores on one side thereof and substantially half way around the intermediate core on the opposite side thereof, one of said prongs being interlaced with said cores in oppositely extending relationship to another of said prongs so as to retain the cores and prongs in assembled relationship without the aid of additional connecting means.

2. A plating rack comprising at least three elongated cores arranged in substantially parallel relationship and a plurality of prongs for supporting articles to be plated, each of said prongs comprising a strand of resilient wire interlaced with said cores by extending the wire substantially half way around each core, the wire being extended around the opposite sides of adjacent cores and one of said prongs being interlaced with said cores in oppositely extending relationship to another of said prongs so as to retain the cores and prongs in assembled relationship without the aid of additional connecting means.

JOSEPH NOVITSKY.