May 10, 1955 A. G. ROSE ET AL 2,708,054

PACKAGING APPARATUS FOR POWDERY, GRANULAR, FLAKY AND OTHER FLUENT SOLID MATERIALS

Filed July 10, 1950

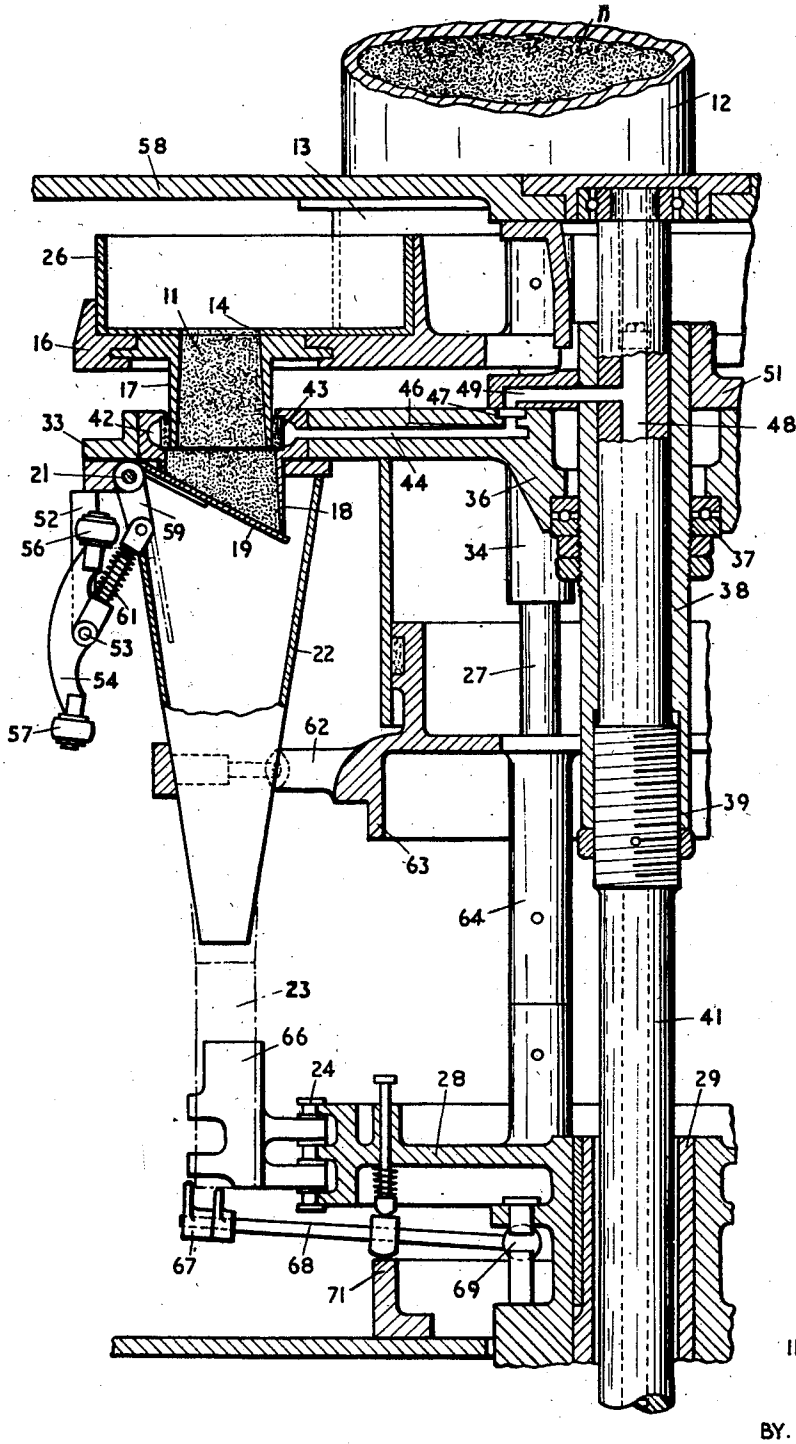

INVENTORS:
A.G.ROSE.
J.A.KAY.
J. PAGE.

BY.

ATTORNEYS

United States Patent Office 2,708,054
Patented May 10, 1955

2,708,054

PACKAGING APPARATUS FOR POWDERY, GRANULAR, FLAKY AND OTHER FLUENT SOLID MATERIALS

Alfred German Rose, James Arthur Kay, and James Page, Gainsborough, England, assignors to Rose Brothers (Gainsborough) Limited, Gainsborough, England, a British company

Application July 10, 1950, Serial No. 172,861

Claims priority, application Great Britain July 21, 1949

3 Claims. (Cl. 222—302)

This invention relates to packaging apparatus for powdery, granular, flaky and other fluent solid materials (hereinafter referred to as "powder"). The invention is concerned with the type of apparatus in which the powder is fed from a hopper to one or a succession of pockets having movable bases from which the charges of powder are discharged into containers. The pockets are made telescopic so as to be adjustable to vary the volume and thus the charge delivered to the containers. This type of apparatus will be referred to herein as the "type described."

Because of the telescopic nature of the pockets, there is a tendency, particularly when packaging fine powders, for the powder to leak through the working clearance between the two members forming each telescopic pocket, and it is an object of the invention to provide an apparatus in which such leakage is minimised if not entirely obviated.

According to the invention, therefore, there is provided an apparatus of the type described, wherein there is formed between the contacting surfaces of the two members of the telescopic pocket an annular chamber to which air under low pressure is admitted. The air pressure must not be sufficient to cause any sensible turbulence in the powder being discharged from the pocket and may vary for powders of different nature and/or density. Preliminary experiments have shown that for fine powders an air pressure of from 5 to 10 lbs. per square inch is sufficient to pass through the working clearance between the contacting surfaces of the telescopic pocket without causing any sensible turbulence in the powder in the pocket. It is found that the pressure chamber thus formed between the contacting surfaces of the pocket is effective in substantially preventing passage of powder through the working clearance between the walls of the pocket.

A sealing member may be provided between the pressure chamber, and the contacting surfaces of the two members of the pocket, such sealing members preferably being formed from felt or other permeable material so as to allow the air to ooze through the sealing members.

The invention may be used on any type of apparatus in which powder is fed to a telescopic pocket. It has been found useful, for example, in connection with the packaging apparatus described in our U. S. Patent No. 2,616,652 of November 4, 1952. The invention, as applied to such apparatus, will now be described in greater detail with reference to the accompanying drawing which shows, in sectional elevation, part of an apparatus of the same general construction as that described in the specification mentioned above, to which reference should be made.

Referring to the drawing, powder **11** flows from a supply pipe **12** into a collecting chamber **13** from which it passes through apertures **14** in a rotatable apertured wheel **16** into pockets **17, 18** having movable bases **19** pivoted at **21**. The bases **19** are opened at intervals to allow the powder to fall into discharge chutes **22** leading to cartons **23**

moved into position to receive the charges by a conveyor chain **24**.

The chamber **13** is arranged in an annular channel **26** the walls of which extend upwardly of the wheel **16**, and in the base of which are formed the apertures **14**. The chamber **13** forms with the base of the channel **26** an enclosed chamber through which the pockets **17, 18** pass in succession, the chamber **13** being of such dimensions that a number of apertures **14** have access to the chamber at the same time. Filling of the pockets **17, 18** thus takes place over the period of time required for them to pass through the chamber.

The wheel **16** is carried by a series of pillars **27** secured to and extending upwardly from a chain wheel **28** forming one of the supports for the conveyor chain **24**. The chain wheel **28** is secured to a sleeve **29** forming part of the main driving gear for the machine. The wheel **16** carries the upper portions **17** of the pockets **17, 18**, while the lower portions **18** (into which the upper portions are telescoped) are carried by an adjusting wheel **33** formed with a series of depending bosses **34** by which it is slidably mounted on the series of pillars **27**. The wheel **33** is formed with a central hub **36** by which it is supported on a thrust bearing **37** carried by an adjusting sleeve **38** making threaded engagement at **39** with an adjusting shaft **41** extending co-axially with the chain-wheel **28**.

The lower portion **18** of each pocket **17, 18** is formed with an annular air chamber **42** in a recess of which is arranged a felt sealing ring **43** in the inner surface of which engages the outer periphery of the upper portion **17** of the pocket. Air under low pressure is led to the chamber **42** of each pocket through a radial conduit **44** (of which there is one for each pocket) formed in the adjusting wheel **33**, the conduits **44** being supplied through ports **46** from an annular conduit **47** which is fed from a central bore **48** of the shaft **41** through a common conduit **49** formed in a flanged member **51** secured to the sleeve **38**. The air in the chamber **42** oozes through the felt sealing ring **43** and is effective in preventing the passage of powder through the working clearance between the walls of the pocket.

The wheel **33** carries a series of depending brackets **52** (one for each pocket **17, 18**) each pivotally supporting at **53** a two-armed lever **54** the arms of which carry cam rollers **56** and **57** arranged, respectively, to engage stationary cams (not shown) mounted on the main framework **58** of the machine. The bases **19** of the pockets **17, 18**, are provided with arms **59** each of which is pivotally connected to a spring toggle member **61** carried by the lever **54**. It will thus be seen that, as the rollers **56** and **57** engage the cams, the bases **19** are opened or closed, as the case may be.

The chutes **22** are carried by arms **62** extending radially from a supporting ring **63** having a series of depending bosses **64** by which it is secured to the pillars **27**. The chain-wheel **28** thus drives the wheels **16** and **33** and the ring **63** simultaneously.

The cartons **23** are guided into pockets **66** carried by the chain **24** in well known manner, the pockets **66** being provided with supporting bases **67** carried on arms **68** pivoted at **69** on the sprocket **28** and extending radially therefrom. The arms **68** are raised by a stationary cam **71** as the cartons approach the filling position so that their open ends embrace the mouths of the chutes **22**.

Adjustment of the capacity of the pockets **17, 18** is brought about by rotation of the adjusting shaft **41** (either manually or by mechanical means) which causes the sleeve **38** to rise or fall (depending on the direction of rotation) so as to raise or lower the wheel **33** carrying the lower portions **18** of the pockets **17, 18** thus causing the pockets **17, 18** to telescope into or out of each other as the case may be.

We claim:

1. Apparatus for packaging fluent materials comprising at least one telescopic open-topped pocket with a movable base for receiving and discharging successive charges of the material, the pocket being constituted by two members slidable one within the other and having the opposed surfaces of their telescopic walls shaped to form a substantially closed annular chamber bounded by portions of said surfaces and giving access to the sliding clearance between the surfaces, and a conduit in one of said members giving access to said chamber and adapted to supply air under low pressure to said chamber.

2. Apparatus as in claim 1, comprising a permeable sealing member between the telescopic walls of the two members.

3. Apparatus as in claim 2, wherein the sealing member is formed from felt material.

References Cited in the file of this patent

UNITED STATES PATENTS

417,321	Gresham	Dec. 17, 1889
928,658	Hoyt	July 20, 1909
1,001,855	Jagenberg	Aug. 29, 1911
1,271,749	Nielsen	July 9, 1918
1,901,961	Grant	Mar. 21, 1933
2,144,569	Frazier	Jan. 17, 1939
2,234,951	Belcher	Mar. 18, 1941
2,634,894	Fischer et al.	Apr. 14, 1953