United States Patent [19]

Kralowetz et al.

[11] **3,889,514**

[45] **June 17, 1975**

[54] **SWAGING MACHINE**

[75] Inventors: **Bruno Kralowetz; Gottfried Blaimschein,** both of Steyr, Austria

[73] Assignee: **GFM Gesellschaft fur Fertigungstechnik und Maschinenbau Aktiengesellschaft,** Steyr, Austria

[22] Filed: **Dec. 28, 1973**

[21] Appl. No.: **429,689**

[30] **Foreign Application Priority Data**

Oct. 10, 1973 Austria 176/73

[52] **U.S. Cl.** **72/402;** 72/406; 74/116; 72/189

[51] **Int. Cl.** **B21j 7/16;** B21j 7/20

[58] **Field of Search** 72/189, 402, 403, 406, 72/407, 408, 452, 373–376; 74/116

[56] **References Cited**

UNITED STATES PATENTS

2,562,643	7/1951	Saxer	72/402
2,986,051	5/1961	Appel	72/402
3,596,497	8/1971	Kralowetz et al.	72/403
3,670,556	6/1972	Kralowetz	72/402
3,690,142	9/1972	Blaimschein	72/406 X

Primary Examiner—C. W. Lanham
Assistant Examiner—D. M. Gurley
Attorney, Agent, or Firm—Kurt Kelman

[57] **ABSTRACT**

The machine comprises means defining a path of travel for a workpiece to be swaged, a plurality of hammers, and drive means operable to impart to said hammers a reciprocating motion toward and away from said path and an oscillating motion in a plane which intersects said path.

3 Claims, 3 Drawing Figures

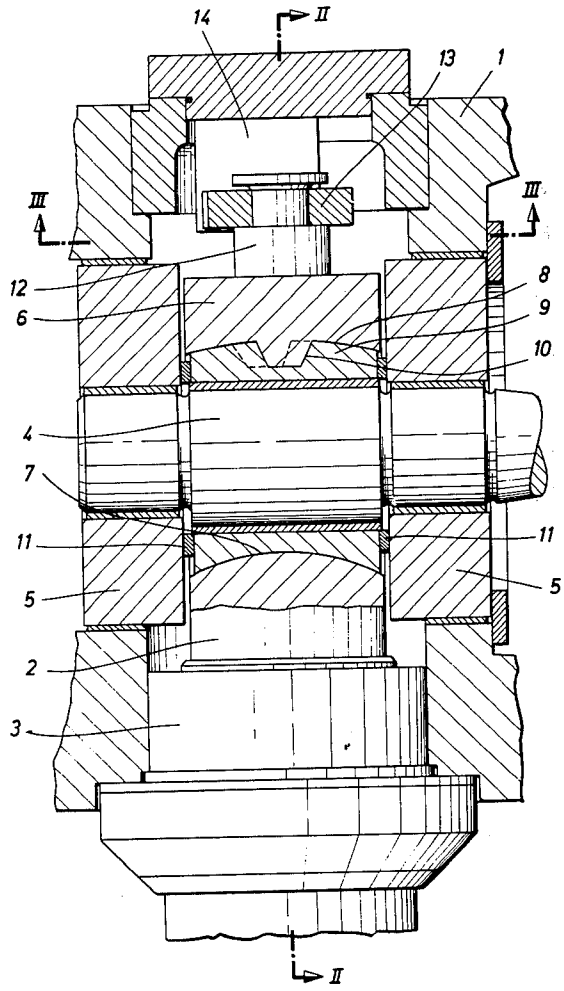

FIG.1

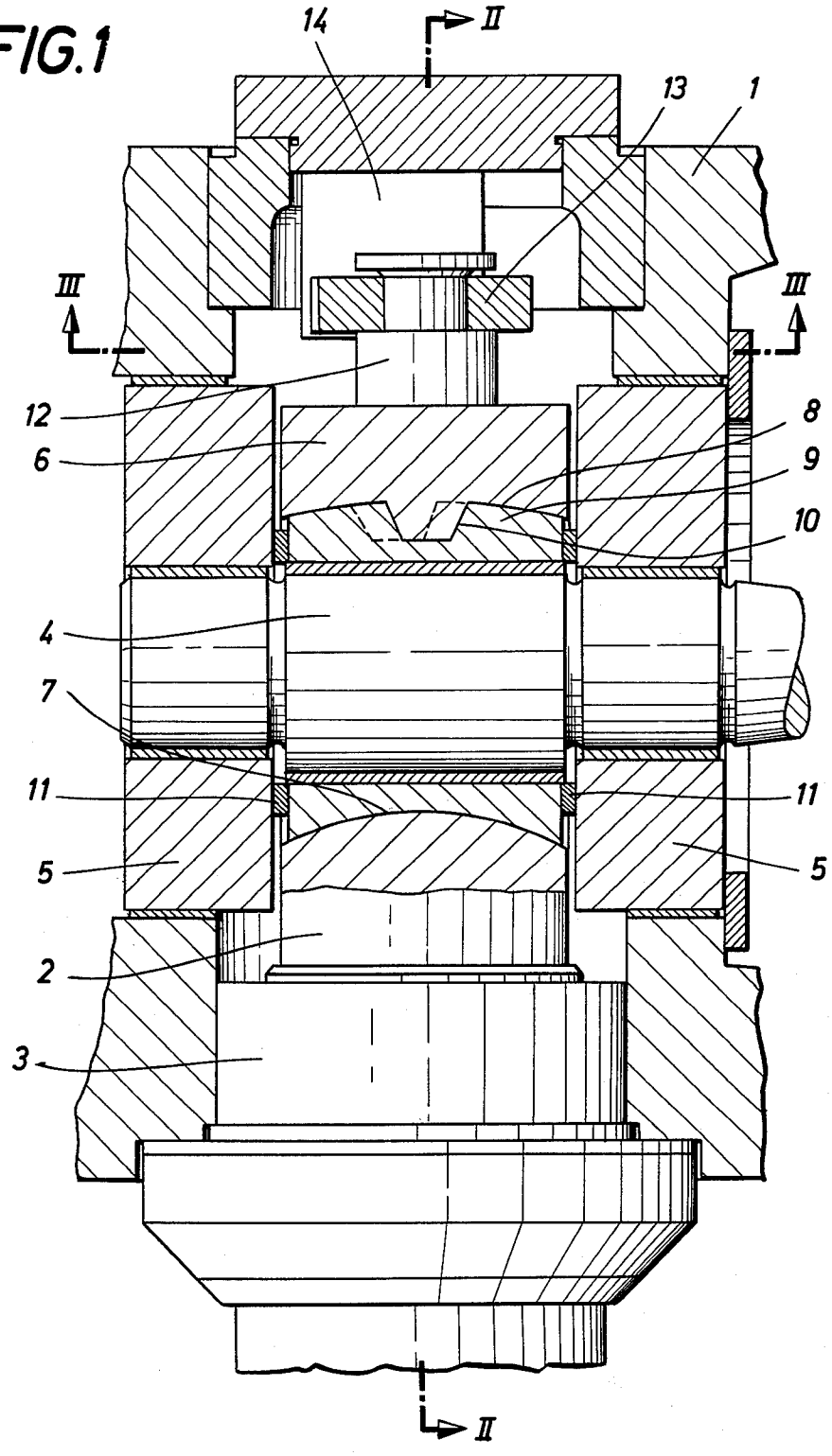

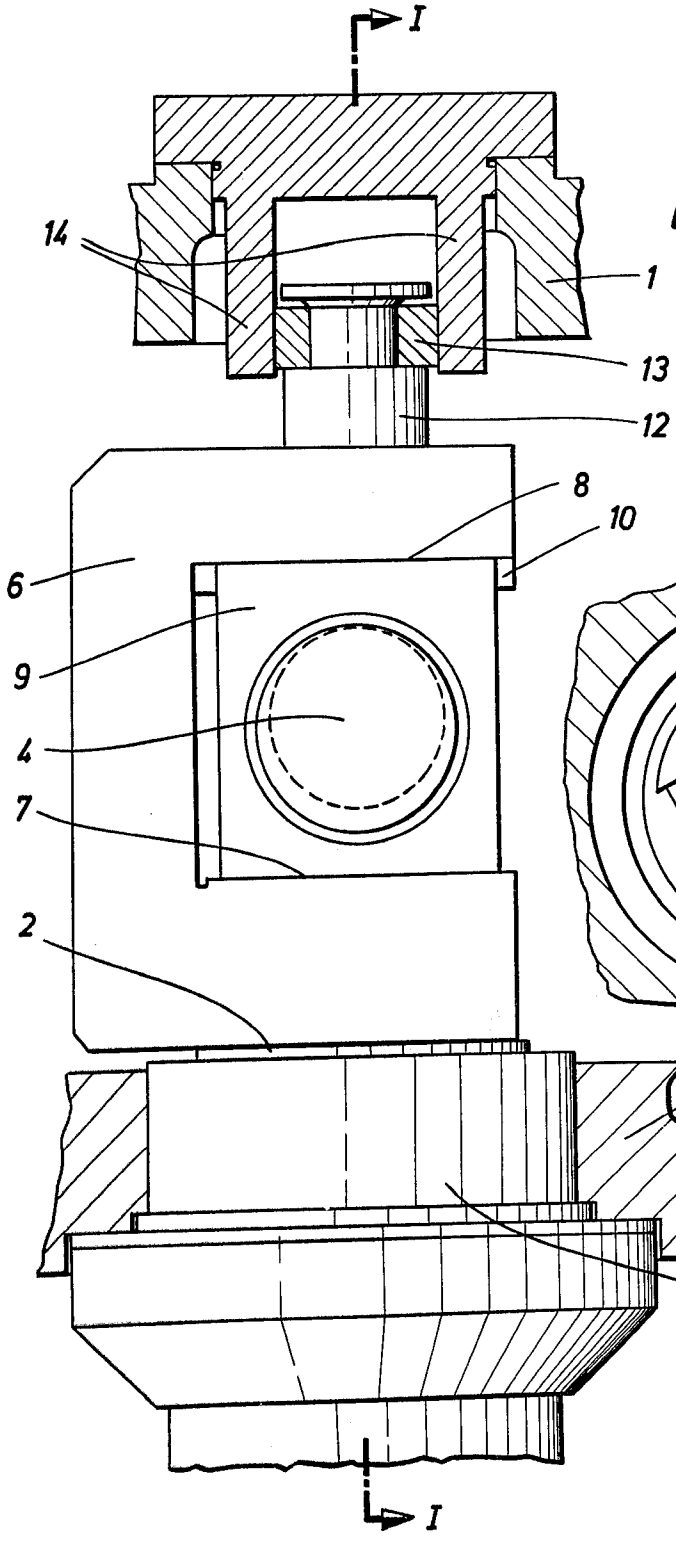

FIG. 2

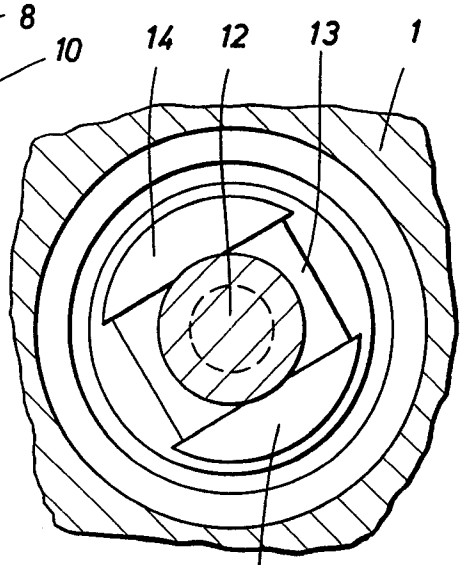

FIG. 3

SWAGING MACHINE

This invention relates to a swaging machine which comprises hammers which are similar to connecting rods and in addition to an actual swaging motion toward and away from the workpiece perform an oscillating motion.

The tools of the previously disclosed swaging machines of this kind oscillate in a plane which extends through the axis of the workpiece. They both deform and advance the workpiece. These swaging machines have proved highly satisfactory swage rod- and bar-shaped workpieces having an angular shape in cross-section (square and rectangular cross-sections) and can produce workpieces having sharply cornered cross-sections within very small tolerances. In swaging circular cross-sections, however, the inevitable offset of the connecting rods to the extent of the bearing play and inevitable errors in the shape of the hammers result in a shifting of the profile and in deviations of the cross-sections from the desired shape; this has undesired results as regards the overall tolerances. On the other hand, the buyers of high-grade rounds specify small tolerances to eliminate the need for a reworking of the stock before it is fed to cold extrusion presses and machines for similar shaping operations. To satisfy these requirements, it is known to use roll forming machines which consist of a large number of rolling mill stands having two or three grooved rolls and by a rerolling operation enable a decrease of the tolerances of stock which has been subjected to normal rolling or swaging operations. These machines have the specific disadvantage that each set of roll can be used only for a single diameter and the rearrangement of the rolling mill stands for a different diameter requires much time.

It is an object of the invention to eliminate these disadvantages and to provide a swaging machine which is of the kind described first hereinbefore and enables a cylindrical swaging with small tolerances and without need for a change of tools within a predetermined dimensional range and has the further advantage that the desired diameter can be adjusted in a very simple manner and within very short time.

This object is essentially accomplished according to the invention in that the hammers oscillate in a plane which intersects the axis of the workpiece. By this oscillation in a direction which is non-parallel to the axis of the workpiece, the hammers impart to the workpiece translational and rotational components of motion so that the workpiece is advanced generally along a helix. The workpiece is thus moved between the faces of the hammers virtually in rolling contact therewith so that a smooth and clean surface is formed on the workpiece and the cross-section of the workpiece has dimensions within the required tolerances.

Another advantage of the swaging machine according to the invention resides obviously in that the workpieces can be sized to various diameters, which can be continuously adjusted merely by a change of the stroke position of the hammers. This does not involve any difficulty.

An illustrative embodiment of the invention relates to swaging machines which have hammers which are driven by eccentric shafts which are parallel to the axis of the workpiece and which carry links which are slidable transversely to the hammer axis and belong to elliptic chucks the spiders of which are formed by the

hammers, said links and spi-ders having meshing helical teeth, each of said hammers having an extension which is guided along a rail or the like. In such machines it will be particularly desirable to provide each extension with a rotatably mounted sliding block, which cooperates with the rail or the like, and to provide for an angular adjustment of the rails or the like for an adjustment of the angle of intersection between the plane of the oscillation of the hammers and the axis of the workpiece. The most advanced continuous swaging machines are driven by eccentrics and because the link mounted on the eccentric shaft is positively coupled to the spider formed by the hammer impart combined reciprocating and oscillating motions to the hammers as the rotation of the eccentric shafts causes the link to move the hammer up and down and the reciprocation of the link in the spider causes by means of the helical teeth an oscillation of the hammer. It will be understood that the hammer must be guided in a bearing which permits of a reciprocating motion and an oscillating motion. The direction of the oscillation of the hammer is controlled by the rail which guides the sliding block, which is connected to the hammer, because the link cannot yield in the direction of the axis of the eccentric shaft and the spider or hammer can slide only along the rail so that the link moving transversely to the axis of the eccentric shaft imparts by means of the meshing helical teeth an osci-llation to the hammer in the plane which is defined by the rail. For this reason, an angular movement of the rail is sufficient for an adjustment of the angle of intersection between the plane of oscillation of the hammers and the axis of the workpiece.

To enable the use of the same tools or hammers for greatly different diameters, the faces of the hammers are straight or slightly concave so that it is sufficient to adjust the stroke position of the hammers when it is desired to shape cross-sections of different sizes.

An illustrative embodiment of the invention is shown by way of example on the accompanying drawing, in which

FIGS. 1 to 3 are, respectively, a sectional view taken on line I—I of FIG. 2, on line II—II of FIG. 1 and on line III—III of FIG. 1 and show parts of the swaging machine.

A machine housing 1 contains hammers 2 which are similar to connecting rods and provided each with a guide bearing 3 and driven by eccentrics 4 which are parallel to the axis of the workpiece. The guide bearings 3 permit of an oscillating motion and a reciprocating motion of the hammers 2. The eccentric 4 is eccentrically mounted in a rotatable adjusting housing 5 so that a rotation of the adjusting housing will change the distance from the axis of the eccentric to the axis of the workpiece, thus making a change of the stroke position of the hammers possible. Each hammer 2 comprises a spider 6 of an elliptic chuck which has a link 9 mounted on the eccentric 4 and slides along cylindrical guiding surfaces 7, 8. The link 9 is positively connected to the spider 6 by helical teeth 10 and is prevented by spacing rings 11 from yielding in the direction of the axis of the eccentric. The hammer has an extension 12 which carries a rotatably mounted sliding block 13, which cooperates with a rail 14, which is angularly adjustable relative to the machine housing 1.

A rotation of the eccentric 4 imparts to the link 9 an up-and-down motion and a reciprocating motion so that a reciprocating motion and an oscillating motion

are imparted to the hammer **2**. The link **9** is laterally supported against the adjusting housing **5** by the spacing rings **11** and by means of the helical teeth **10** forces the spider **6** and hammer **2** to perform an oscillating motion in a direction which is defined by the position of the rail **14**, which permits the sliding block **13** to slide only in this direction. For this reason, the direction of oscillation of the hammers can be adjusted simply by an angular movement of the rail **14**.

The oscillation of the hammers **2** in a plane which intersects the axis of the workpiece moves the workpiece along a helix between the hammer faces and ensures that a neat cross-sectional shape within small tolerances is imparted to the workpiece. Because the hammer faces are straight or slightly concave, the swaging machine can be adjusted to size workpieces to greatly different diameters simply by an adjustment of the stroke position of the hammers, and the machine differs from other sizing means in that this adjustment can be performed continuously.

We claim:

1. In a swaging machine which comprises means defining a path of travel for a workpiece to be fed in the direction of the path and to be swaged, a plurality of hammers, and drive means operable to impart to the hammers a reciprocating motion toward and away from the path for swaging said workpiece and an oscillating motion for feeding said workpiece, the improvement of the drive means being arranged to impart to the hammers an oscillating motion in a plane which extends transversely to the direction of the path of travel.

2. In a swaging machine which comprises means defining a path of travel for a workpiece to be fed in the direction of the path and to be swaged:

a plurality of hammers, each of the hammers comprising a spider of an elliptic chuck, and

drive means for each of the hammers to impart to each hammer a reciprocating motion toward and away from the path for swaging said workpiece and on oscillating motion in a plane which extends transversely to the direction of the path of travel for feeding said workpiece, the drive means comprising an eccentric shaft extending parallel to the path, a link mounted on the shaft and slidable transversely to the axis of the associated hammer and extending in the spider of the associated hammer, helical teeth on the link, helical teeth on the spider and meshing with the helical teeth on the link, an angularly adjustable guide associated with each hammer, an extension on each hammer, and a sliding block rotatably mounted on the hammer extension and cooperating with the guide whereby the angle of intersection between the plane of oscillation of the hammer and the path is adjustable by an angular adjustment of the guide.

3. In the swaging machine as set forth in claim **2**, in which said guides consist of rails.

* * * * *

UNITED STATES PATENT OFFICE
CERTIFICATE OF CORRECTION

PATENT NO. : 3,889,514
DATED : June 17, 1975
INVENTOR(S) : Bruno Kralowetz et al

It is certified that error appears in the above-identified patent and that said Letters Patent are hereby corrected as shown below:

In the title page, under /30/, change "Oct." to --Jan.--

Signed and Sealed this

ninth Day of *September 1975*

[SEAL]

Attest:

RUTH C. MASON
Attesting Officer

C. MARSHALL DANN
Commissioner of Patents and Trademarks