E. L. CALAHAN.

PACKAGING DEVICE.

APPLICATION FILED APR. 1, 1914.

1,136,505.

Patented Apr. 20, 1915.

2 SHEETS—SHEET 1.

Fig. 1.

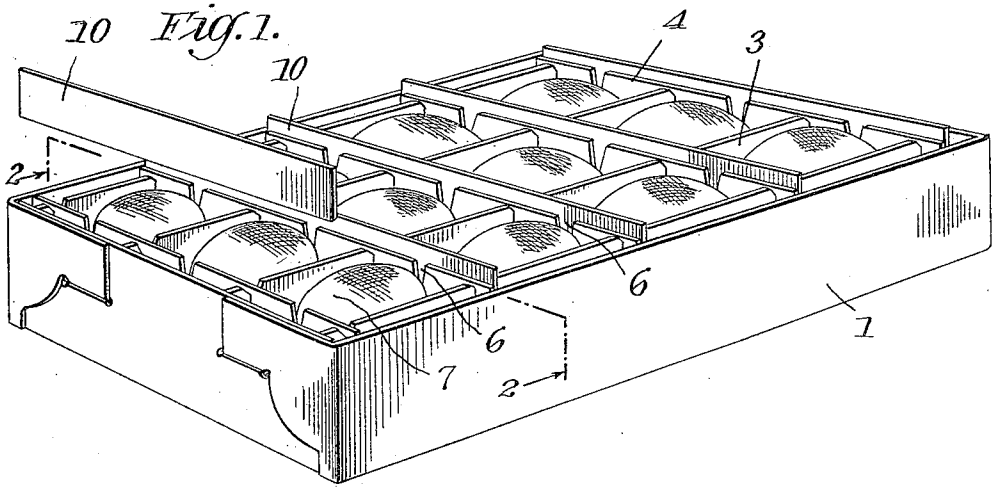

Fig. 2.

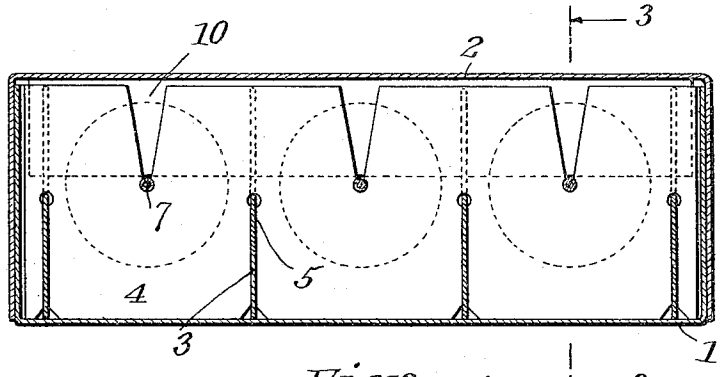

Fig. 3.

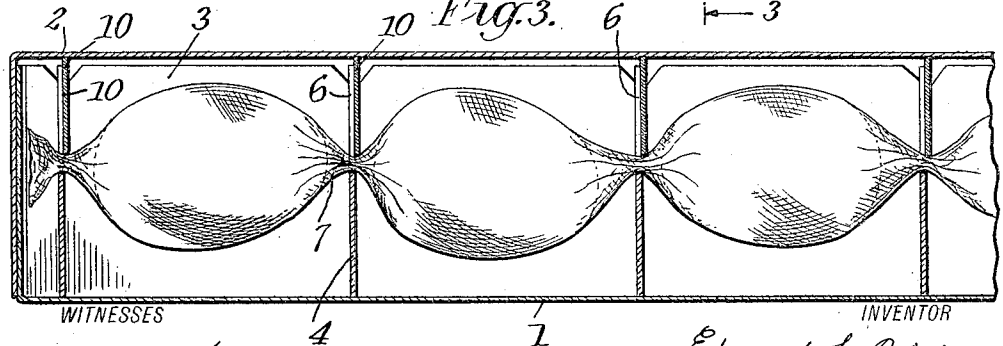

WITNESSES

John C. Sanders

Albert F. Heuman

INVENTOR

Edward L. Calahan

BY

Wm Wallace White

ATTORNEY

THE NORRIS PETERS CO., PHOTO-LITHO., WASHINGTON, D. C.

E. L. CALAHAN.

PACKAGING DEVICE.

APPLICATION FILED APR. 1, 1914.

1,136,505.

Patented Apr. 20, 1915.

2 SHEETS—SHEET 2.

Fig. 4.

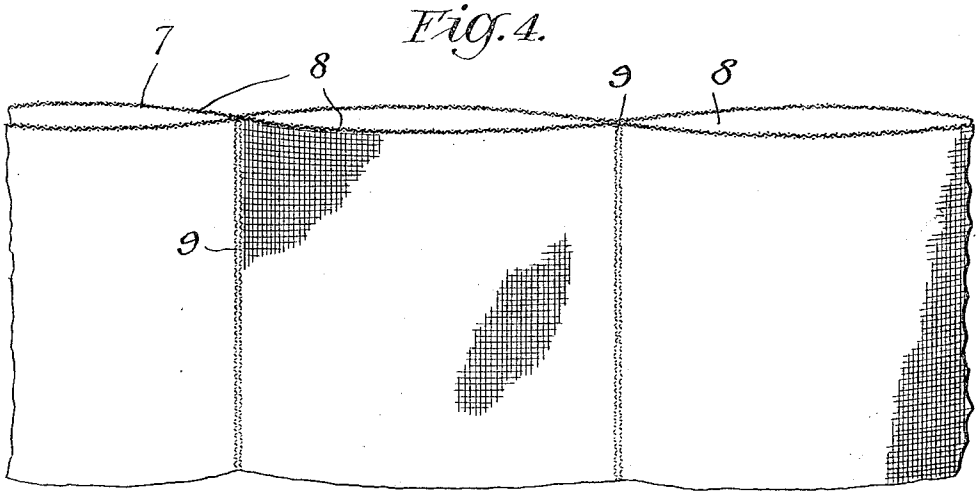

Fig. 5.

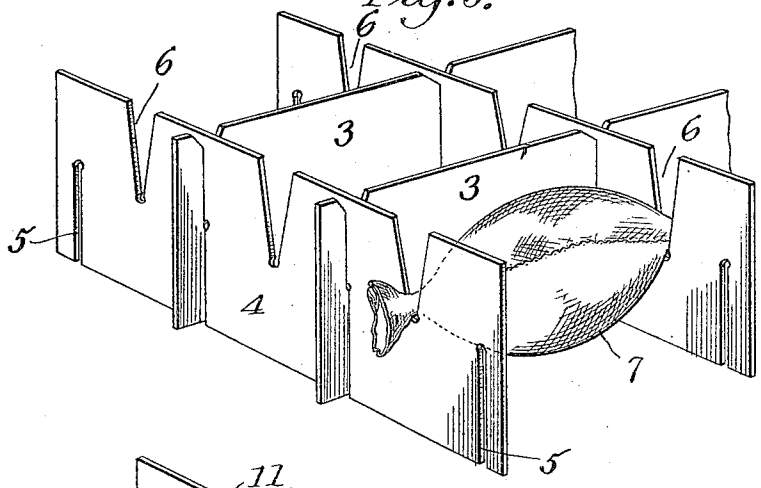

Fig. 6.

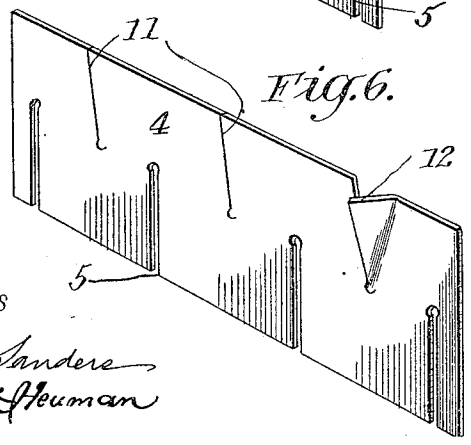

WITNESSES

John C. Sanders

Albert F. Heuman

INVENTOR

Edward L. Calahan

BY

Wallace White

ATTORNEY

THE NORRIS PETERS CO., PHOTO-LITHO., WASHINGTON, D. C.

UNITED STATES PATENT OFFICE.

EDWARD L. CALAHAN, OF CLIFTON, NEW JERSEY.

PACKAGING DEVICE.

1,136,505. Specification of Letters Patent. Patented Apr. 20, 1915.

Application filed April 1, 1914. Serial No. 828,670.

To all whom it may concern:

Be it known that I, EDWARD L. CALAHAN, a citizen of the United States, residing at 137 Madison avenue, Clifton, New Jersey, have invented new and useful Improvements in Packaging Devices, of which the following is a specification.

This invention relates to a packaging device and more especially to a device of this character adapted for the purpose of transporting eggs, or other breakable articles.

One of the objects of the invention is to provide a device of this character by means of which breakable articles may be transported safely without danger of breakage in transit.

Other objects are to provide a device of this character which will enable the article to be packed quickly and easily, which is comparatively simple in construction and inexpensive to manufacture, and which will be efficient in use.

Other objects will in part be obvious and in part be pointed out hereinafter.

In the accompanying drawings showing illustrative embodiments of the invention, and in which the same reference numerals refer to similar parts of the several figures, Figure 1 is a perspective view of the packaging device with the cover removed, showing the articles positioned therein, one of the locking members being shown removed; Fig. 2 is a sectional view taken on the line 2—2 of Fig. 1 and showing the cover in position; Fig. 3 is a sectional view taken on the line 3—3 of Fig. 2; Fig. 4 is a detail elevational view of the article carrier; Fig. 5 is a detail perspective view, and Fig. 6 is a perspective view showing a modified form of construction of the partitions.

Referring to the drawings, 1 indicates a box of any suitable size and construction, and formed of any suitable material and which is provided with a suitable cover 2. Removably positioned within the box is a collapsible frame formed of intersecting longitudinal and transverse partitions 3 and 4, the longitudinal partitions being parallel to one another, and the transverse partitions being parallel to one another, thereby forming a plurality of cells or compartments. The partitions of each set are provided with slits 5, as is usual in devices of this character, with which the partitions of the other set are adapted to engage, whereby the partitions will be interlocked with one another. The partitions forming one set, preferably the transverse partitions, are provided midway the width of the compartments with slots 6 which extend to a point substantially midway the height of the compartment, as clearly shown in Figs. 2, 3 and 5.

A carrier 7 for the articles to be transported is provided which is formed from a textile fabric, such as cheese cloth, cloth, or the like. This carrier is preferably formed from a single strip of the fabric folded upon itself to provide an opening at the top, by means of which the articles may be placed therein. The carrier is preferably divided into a number of pockets 8 by means of transverse stitching 9. The distance between adjacent rows of stitches 9—9 is slightly greater than the distance between the transverse partitions 4—4 in order to allow the fabric to conform to the shape of the articles inserted in the pockets, and to permit the stitched portions to engage the slots 6 formed in the partitions 4.

It will of course be understood that there will be a carrier 7 for each longitudinal row of compartments, and if the carrier is divided into pockets 8 there will be as many pockets as there are compartments in each horizontal row. As shown in the drawing, for example, there will be 3 carriers, each of which will be provided with 4 pockets.

When it is desired to pack the articles they are placed within the carrier 7, and the carrier is then placed in position, as clearly indicated in Fig. 3, the portions of the carrier between the articles engaging with the slots 6, whereby there will be one article in each compartment, and as clearly shown, the article will be held out of engagement with the walls of the box or with the walls of the compartment.

In order to further secure the articles against movement locking strips 10 are provided which are preferably formed of cardboard or the like, and which are placed adjacent to the transverse partitions 4, being held in place by the slits 5 formed in the longitudinal partitions 3. These locking strips, when positioned, will cause the portion of the carrier between the articles to be compressed, as indicated on Fig. 3, thereby more firmly holding the article from move-

ment within the carrier. The strips 10 are preferably of such a height that they will tend to project slightly above the edges of the box, 1, as indicated in Fig. 1, whereby when the cover is placed in position it will press against the upper edges of the locking strips 10, tending to force them farther downward, at the same time effectually preventing the strips from any upward movement, which would result in an unlocking or loosening of the portions of the carrier between the articles.

From the above description it will be understood that when the articles are packed in the packaging device they are out of contact with any of the walls of the device, being held suspended by means of the fabric carrier 7. It is of course understood that the length of the carrier between the transverse partitions 4 is such that the article contained therein is not permitted to swing laterally during transportation and that, therefore, articles may be transported without danger of breakage en route.

Instead of forming slots 6 in the transverse partitions 4, the material of which the partitions are made, may be provided with slits 11, as shown in Fig. 6, and when placing the carrier in position a portion of the partition is bent outward slightly, as indicated at 12 in Fig. 6 permitting the fabric to be inserted, after which the bent out portion is released thereby tending to assume its normal position, thereby firmly holding the carrier in position.

Having described this invention in connection with the illustrative embodiments thereof, to the details of which disclosure the invention is not of course to be limited, what is claimed as new, and what is desired to be secured by Letters Patent is set forth in the appended claims:

1. In a packaging device, in combination, a box, two sets of partitions therein, the partitions of one set intersecting with the partitions of the other set to form compartments, slots formed in the partitions of one of said sets, a fabric carrier adapted to support the articles to be packed engaging in said slots, and means engaging said carrier adjacent said slots to prevent movement of said carrier relatively to said slots.

2. In a packaging device, in combination, a box, two sets of partitions therein, the partitions of one set intersecting with the partitions of the other set to form compartments, slots formed in the partitions of one of said sets, a fabric carrier adapted to support the articles to be packed engaging said slots, and removable means engaging said carrier adjacent said slots to prevent movement of said carrier relatively to said slots.

3. In a packaging device, in combination, a box, two sets of partitions therein, the partitions of one set intersecting with the partitions of the other set to form compartments, slots formed in the partitions of one of said sets, a fabric carrier adapted to support the articles to be packed engaging in said slots, and locking strips engaging said carrier adjacent said slots to prevent movement of said carrier relatively to said slots.

4. In a packaging device, in combination, a box, a cover therefor, a plurality of interlocking longitudinal and transverse partitions within said box forming a plurality of compartments, slots formed in said transverse partitions, a fabric carrier adapted to support the articles to be packed, and engaging in said slots whereby said carrier will be held in position within the box, and locking strips adapted to register with said slots and engaging said carrier to lock the same against movement.

5. In a packaging device, in combination, a box, a cover therefor, a plurality of interlocking longitudinal and transverse partitions within said box forming a plurality of compartments, slots formed in said transverse partitions, a fabric carrier adapted to support the article to be packed and engaging in said slots whereby said carrier will be held in position within the box, and locking strips adapted to register with said slots and engaging said carrier to lock the same against movement, said locking strips engaging the inner surface of the cover when the cover is positioned upon the box.

6. In a packaging device, in combination, a box, two sets of partitions therein, the partitions of one set intersecting the partitions of the other set, said partitions being provided with registering slits at their points of intersection whereby they are held in interlocking relation with one another, the partitions of one of said sets being provided with slots, a fabric carrier adapted to support the articles to be packed engaging in said slots, and locking strips held in position in the slits of the partitions of one of said sets and registering with the slots in the other of said sets and engaging said carrier adjacent said slots to prevent movement of said carrier relatively to said slots.

7. In a packaging device, in combination, a box, two sets of partitions therein, the height of said partitions being equal to the height of said box, the partitions of one set intersecting the partitions of the other set, said partitions being provided with registering slits at their points of intersection whereby they are held in interlocking relation with one another, the partitions of one of said sets being provided with slots, a fabric carrier adapted to support the articles to be packed engaging in said slots, and locking strips held in position in the slits of the partitions of one of said sets and registering with the slots of the other of said sets and engaging said carrier adjacent said

slots to prevent movement of said carrier relatively to said slots, the height of said strips being greater than the height of said slots whereby said strips will be engaged by the inner surface of the cover and will be held thereby against movement.

In testimony whereof I have signed my name to this specification in the presence of two subscribing witnesses.

EDWARD L. CALAHAN.

Witnesses:
WM. P. JONES,
JOHN C. SANDERS.

Copies of this patent may be obtained for five cents each, by addressing the "Commissioner of Patents, Washington, D. C."