No. 777,490. PATENTED DEC. 13, 1904.

H. BREMER.

ELECTRIC ARC LAMP.

APPLICATION FILED MAR. 26, 1902.

NO MODEL. 4 SHEETS—SHEET 1.

Fig. 1

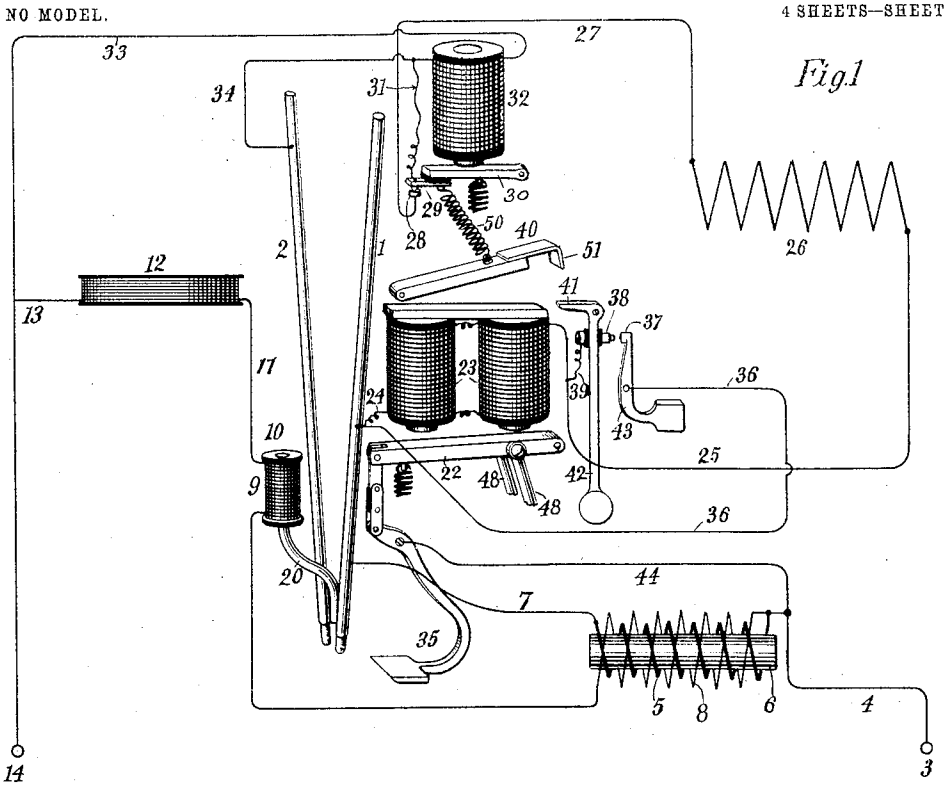

Fig. 4

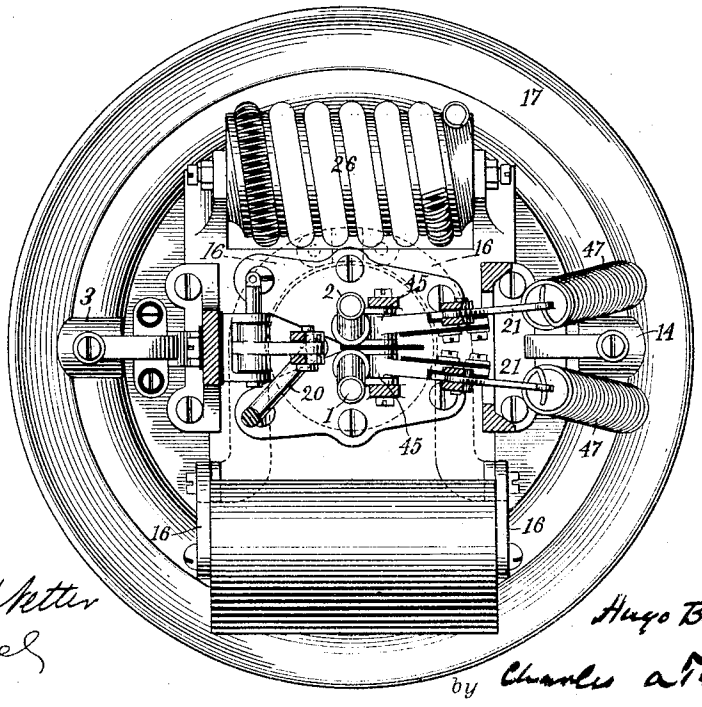

Witnesses:
Raphael Netter
Wm. H. Capel

Inventor
Hugo Bremer
by Charles A. Terry Atty

No. 777,490. PATENTED DEC. 13, 1904.

H. BREMER.

ELECTRIC ARC LAMP.

APPLICATION FILED MAR. 26, 1902.

NO MODEL. 4 SHEETS—SHEET 2

Fig. 2

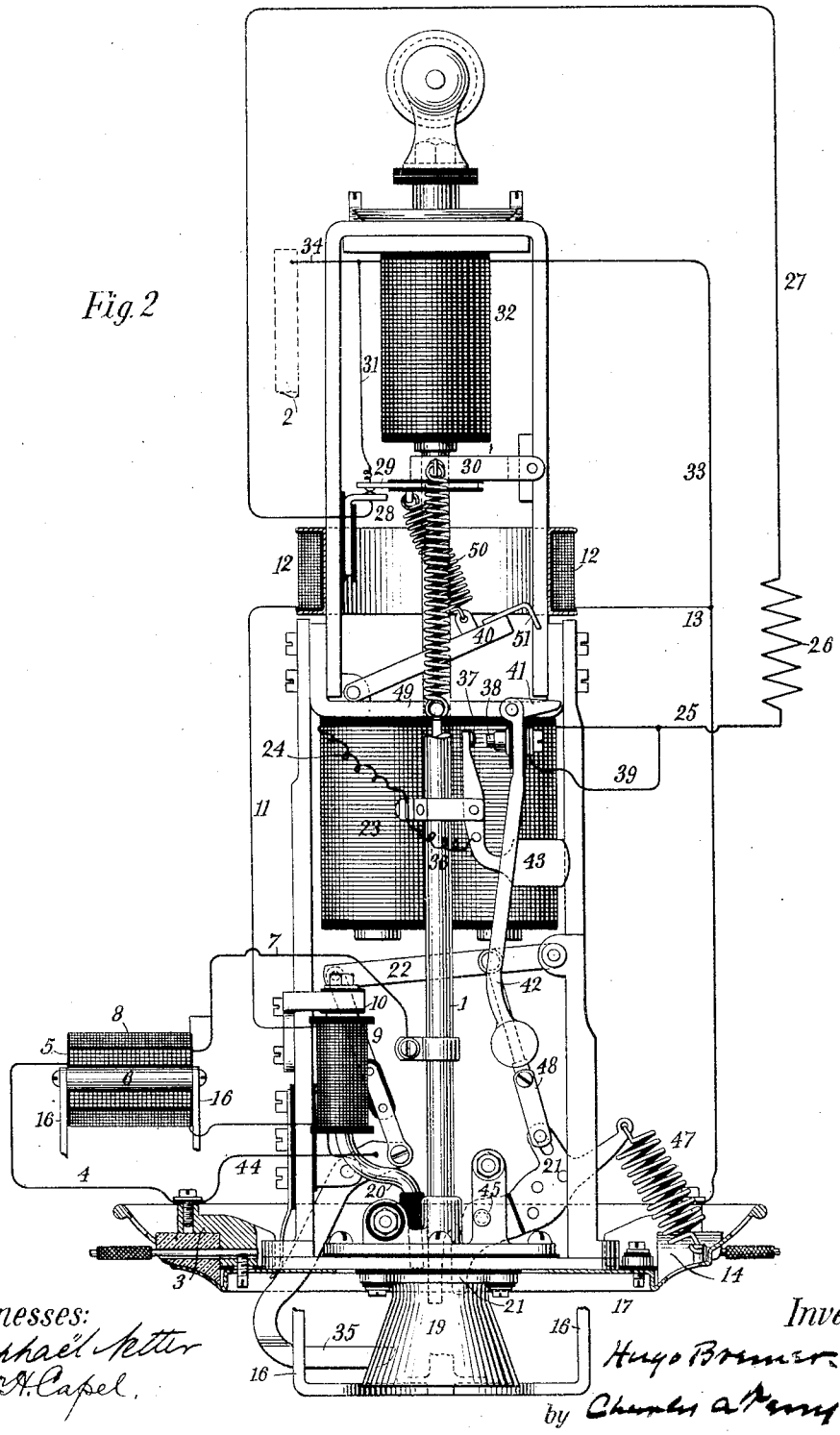

Witnesses:
Raphael Netter
Wm. A. Capel.

Inventor
Hugo Bremer.
by Charles A. Perry, Att'y.

No. 777,490. PATENTED DEC. 13, 1904.

H. BREMER.

ELECTRIC ARC LAMP.

APPLICATION FILED MAR. 26, 1902.

NO MODEL. 4 SHEETS—SHEET 3.

Fig. 3

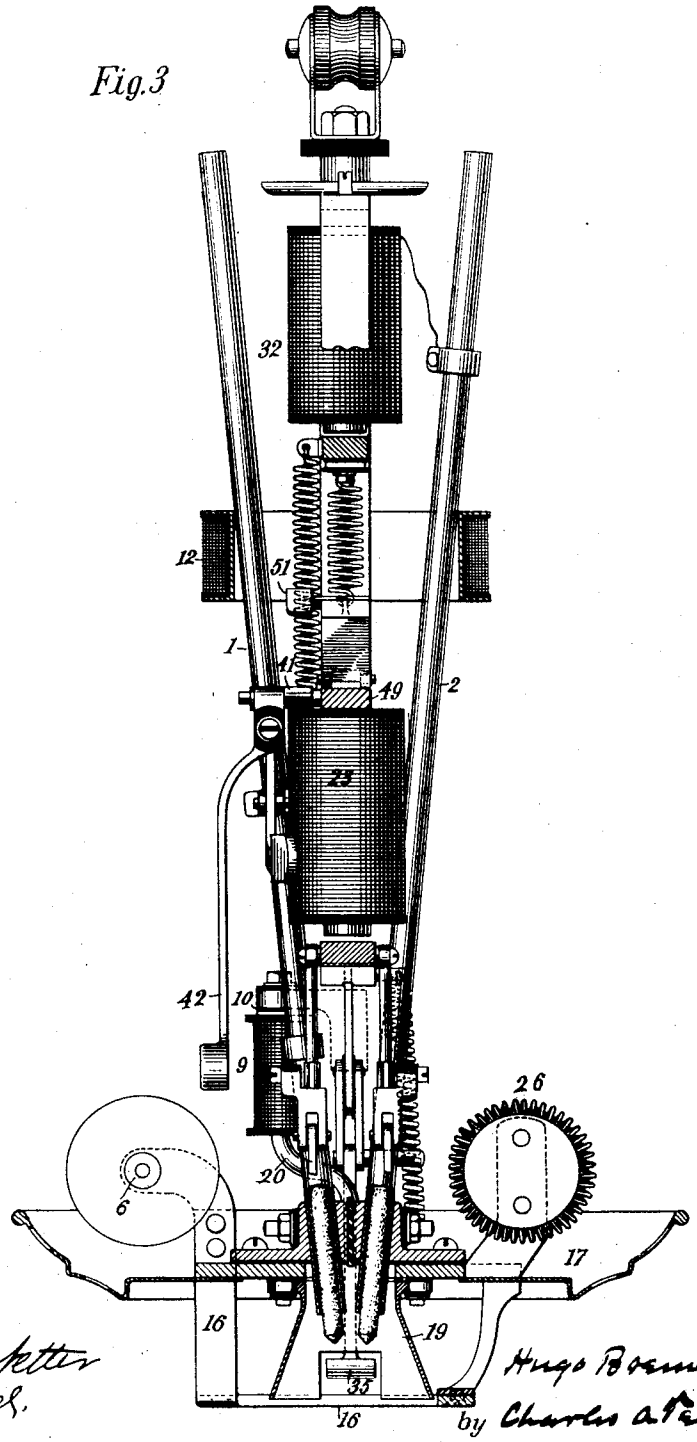

Witnesses:
Raphael Netter
Wm. A. Capel.

Inventor
Hugo Bremer
by Charles a Terry. Att'y

No. 777,490. PATENTED DEC. 13, 1904.

H. BREMER.

ELECTRIC ARC LAMP.

APPLICATION FILED MAR. 26, 1902.

NO MODEL. 4 SHEETS—SHEET 4.

Fig. 5

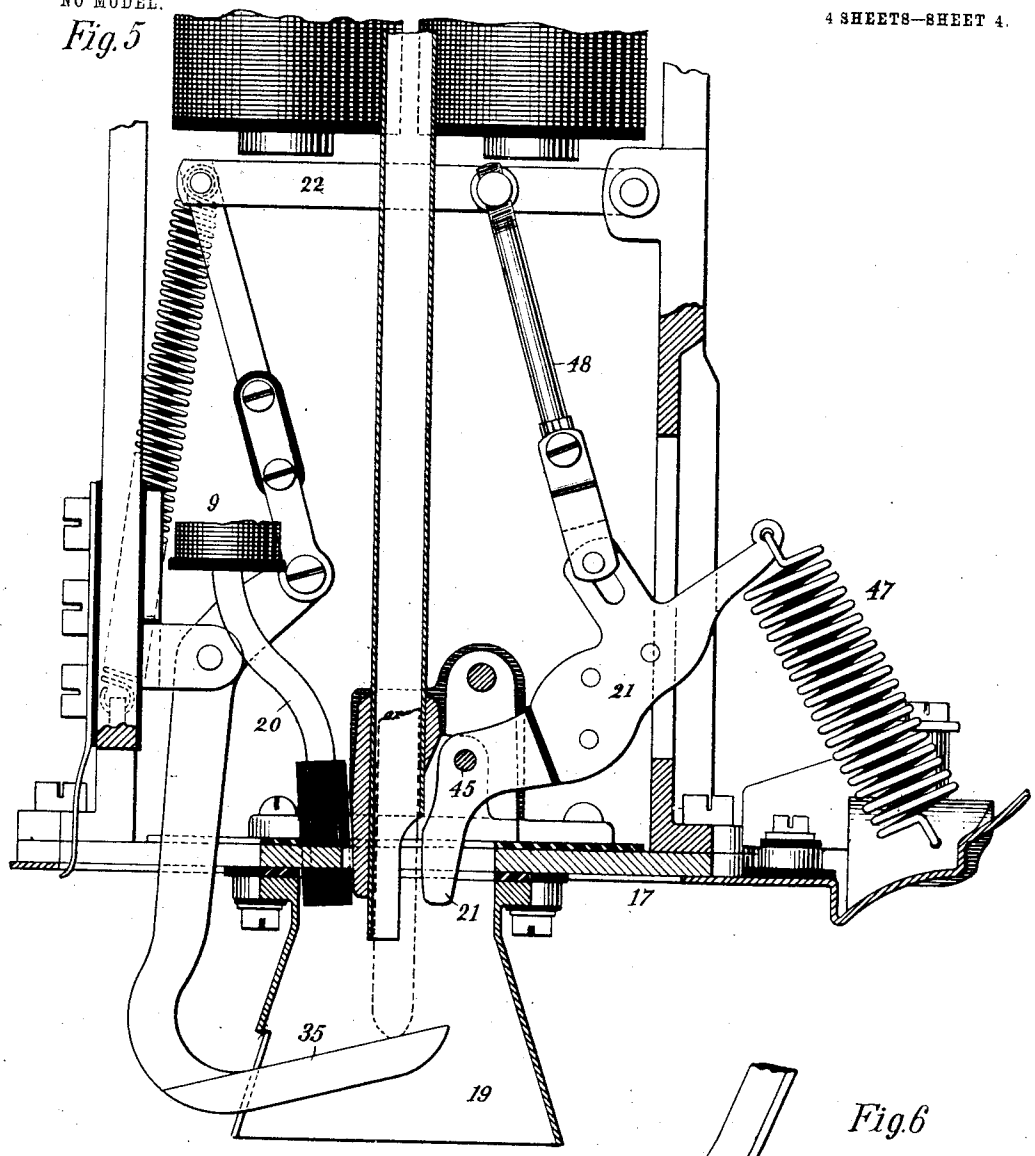

Fig. 6

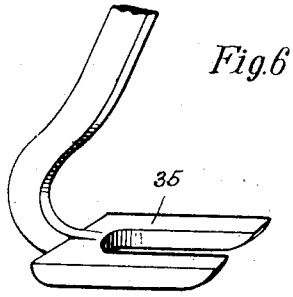

Witnesses:
Raphael Netter
Wm. H. Capel

Inventor
Hugo Bremer
by Charles A. Perry — Att'y

No. 777,490. Patented December 13, 1904.

UNITED STATES PATENT OFFICE.

HUGO BREMER, OF NEHEIM, GERMANY, ASSIGNOR, BY MESNE ASSIGNMENTS, TO WESTINGHOUSE ELECTRIC & MANUFACTURING COMPANY, A CORPORATION OF PENNSYLVANIA.

ELECTRIC-ARC LAMP.

SPECIFICATION forming part of Letters Patent No. 777,490, dated December 13, 1904.

Application filed March 26, 1902. Serial No. 100,139. (No model.)

To all whom it may concern:

Be it known that I, HUGO BREMER, a subject of His Majesty the Emperor of Germany, and a resident of Neheim, Province of Westphalia, Empire of Germany, have invented certain new and useful Improvements in Electric-Arc Lamps, of which the following is a specification.

My invention relates to certain improvements in electric lamps of that class in which an arc is formed between the ends of two or more parallel or converging electrodes and the light is yielded for the most part by the arc as distinguished from the incandescent point of the electrodes. In certain patents heretofore issued to me I have described electrodes of certain compositions especially adapted for use in this class of electric lamps, such electrodes being adapted to yield light of a superior quality and with higher efficiency than the usual carbon electrodes employed in arc-lamps. My present invention relates more particularly to the structure of an arc-lamp especially adapted for using electrodes of the character referred to.

The invention involves various details of construction, which will be more particularly described in connection with the accompanying drawings, in which—

Figure 1 is a diagram showing the circuits of the lamp. Fig. 2 is a side elevation of the lamp with its outer casing removed, and Figs. 3, 4, 5, and 6 illustrate details.

Referring to the drawings, 1 and 2 represent electrode-tubes designed to receive the electrodes and guide them in their proper relations to each other. When the lamp is used as a continuous-current lamp, the tube 1 may be regarded as the positive tube—that is to say, for containing the positive electrode—and the tube 2 the negative.

For convenience of description the lamp will be described more particularly as adapted for use in a continuous-current circuit, although it will be understood that various features thereof are also applicable for use in an alternating-current lamp.

3 represents the positive binding-post, which is connected by a conductor 4 with one coil, 5, of an electromagnet 6. A conductor 7, leading from the coil 5, is connected with the positive carbon rod 1. A second coil 8 is wound upon magnet 6 in a reverse direction from the coil 5, one terminal of the coil 8 being connected with the conductor 4 and the remaining terminal through the coils 9 of an electromagnet 10, thence by a conductor 11, through a resistance 12, with the conductor 13, leading to the negative binding-post 14 of the lamp. The poles 15 of the magnet 6 are provided with soft-iron extensions 16, which extend below a base-plate 17 and partially embrace a reflector 19, within which the arc is formed. These poles serve as a magnetic regulator for controlling the position of the arc and aiding in causing it to be of the desired length and steadiness. The coil 5, which may be conveniently termed the "series" coil, tends to give to the poles 16 a degree of magnetization varying directly with the amount of current flowing from one electrode to the other, while the coil 8, connected in shunt thereon, acts in opposition to the coil 5. In a constant-potential circuit the tendency would be for the coil 8 to have an approximately constant effect, which may, if desired, be superior to that of the coil 5, so that the resulting magnetism exhibited at the extensions 16 will be diminished with increments of current through the arc, and vice versa. The extensions 16 are here shown as being of considerable length and so arranged as to bring the direction of the lines of force in the most advantageous position. The construction also permits the magnet 6 to be removed to such a distance from the arc as to be free from danger of being overheated.

The magnet 10 has a polar extension 20 projecting downward toward the points of the electrodes, the effect of which is to project the arc downward away from the points of the electrodes and in conjunction with the extensions 16 to regulate and steady the arc. Should the arc become too long by reason of the burn-

ing away of the lower ends of the electrodes, the effect of the polar extension 20 will be to aid in rupturing the arc, and thus preventing injury to the metal of the electrode-tubes. The resistance 12 is of sufficient quantity to prevent an excess of current from traversing the coils of the magnet 10. I have found it advantageous to place the projections 20 not between the electrodes, but a little to one side thereof and a little nearer to one than the other. This arrangement has a better effect in regulating the arc. It will be observed also that these extensions are below the arc, this being, as I have found, the best position.

The electrodes descending through the electrode-tubes are held by clutches 21, which are controlled by the armature 22 of a magnet 23, the coils of which are connected in a shunt-circuit around the electrodes. For this purpose a conductor 24 leads from the conductor 7 through the coils of the magnet to a conductor 25, which is connected to a resistance 26, the remaining terminal of which resistance is connected by a conductor 27 with a contact-point 28. An armature 30, having a contact-point 29, is employed for making and breaking the connections of this shunt-circuit, the point 29 being connected by a conductor 31 with one terminal of an electromagnet 32, the other terminal of which is connected by a conductor 33 with the conductor 13 leading to the negative pole of the lamp. The magnet 32 is employed for operating the armature 30 and when it is vitalized separates the points 29 and 28, thus interrupting the connections of the magnet 23. When the magnet 23 is thus demagnetized, the armature 22 falls away, thus permitting the clutches 21 to engage their respective electrodes and hold them in position.

The current traversing the arc to the electrode-tube 2 passes through a conductor 34, thence through the magnet 32 and by way of conductor 33 to the negative terminal of the lamp, so that when the lamp is in normal operation the circuit through the magnet 23 is interrupted at 28. When, however, the resistance of the arc has exceeded a predetermined amount, then the current flowing through the conductor 34 and the magnet 32 will diminish sufficiently to allow the armature 30 to fall away, thus closing the circuit through the magnet 23, which thereupon attracts its armature 22 and releases the clutches 21, thus permitting the electrodes in the tubes 1 and 2 to feed forward and come into closer proximity. As soon as contact is made at the point 28 the lamp-terminals are connected through a circuit including the resistance 26, which is thus thrown into the circuit. In this way all disturbance of the other lamps in the circuit during the feeding and regulating operation of a given lamp is avoided. It is also true that the resistance 26 is in circuit when no current is on the line, whereby provision is made for the starting of the circuit of every lamp in the line without difficulty.

In order to prevent the electrodes from descending too far and also for the purpose of insuring the presence of an arc between the two, an arc-striking arm 35 is connected with the armature 22 in such manner as to be thrust forward beneath the ends of the electrodes when the armature is drawn toward its magnet and to thus be in position to arrest the further motion of the electrodes and to close a short circuit between them. The connections of the armature 22 with the clutches 21 and the arc-striking arm 35, respectively, are such that the arm accomplishes all or the major portion of its movement before the clutches completely release the electrodes, by reason of which fact the end of the arm 35 is always sure to have passed the electrode-points before they descend into their proper position. Thereupon the electromagnet 32 becomes energized, the magnet 23 deënergized, the clutches 21 are released, and the striking-arm 35 drawn backward by the action of a spring or other suitable means. Should for any reason the arc fail to be re-established in the manner described—as, for instance, by a failure of the electrodes to feed forward—then other means than the electromagnet 32 and contacts 28 and 29 should be present for withdrawing the arm 35 and causing its action to be repeated. For this purpose I have provided a shunt-circuit to the magnet 23, consisting of a conductor 36, leading from the conductor 24 to a contact 37, the corresponding contact-point 38 being connected by a conductor 39 with a conductor 26. A second armature 40 is applied to the magnet 23, adapted to respond slowly to the action of that magnet and in so doing to strike an arm 41 of a pendulum 42, carrying the contact-point 38. The point 37 may also be mounted upon a weighted arm 43, so as to yield when struck by the contact-point 38. It will be seen, therefore, that if the magnet 23 remains energized for any predetermined period the armature 40 will respond, thereby short-circuiting the magnet 23, thus causing the arm 35 to be drawn away, whereupon the operation will be repeated. For better insuring the striking of the arc the arm 35 may be connected by a conductor 44 with the conductor 4, so that the arm 35 is in electrical connection with the positive side of the lamp. Contact, therefore, with the negative electrode will insure an arc being started as the armature 35 draws away therefrom, and this arc is transferred from the arm 35 to the positive electrode during the further movement of the arm away therefrom. It is of course possible to connect the arm 35 with the negative side of the lamp instead of the positive; but inasmuch as usually an arc will shift from one positive electrode to another positive electrode with greater readiness than from one

negative electrode to another negative I usually prefer to connect the arm 35 with the positive side of the lamp. The arm 35 may be in the form of a fork, as shown, one arm extending beneath each electrode, and thus permitting the light to pass between the arms.

Referring now more particularly to some of the details of construction, it will be seen that the striking-arm 35 is pivoted to the framework of the lamp, the short arm of the lever being connected with one end of the armature 22. The clutches 21 are independently movable, being pivoted to the frame of the lamp at 45, springs 47 tending to force them against the electrodes. Links 48 connect the respective pivoted arms with the armature 22. The springs thus tend to withdraw the armature from its magnet and at the same time withdraw the arm 35 from beneath the electrodes. By having the clutches independently movable they are able to adjust themselves to any possible irregularities in the diameters of the electrodes.

A construction which I have found convenient for securing the slow movement of the armature 40 consists in mounting it above the back piece 49 of the magnet 23 and employing a long resilient retracting-spring 50, adapted to normally hold the armature at a considerable distance from the back piece of the magnet. The parts are adjusted, however, so that any long-continued magnetization on the part of the magnet 23 will cause this armature to move forward and an extension thereof, 51, to strike the short arm 41 of the pendulum 42, which will thereupon swing the point 38 into contact with the point 37, making a momentary contact which will again be interrupted by the return swing of the pendulum.

It will be understood that the various portions of the lamp are so insulated as to prevent short-circuits therethrough.

I claim as my invention—

1. The combination with parallel or converging electrodes and means for feeding the same, of an arc-striking and electrode-arresting device, an electromagnet for operating the same at the required times, and means for de-energizing said magnet after a predetermined interval independently of the action of the arc.

2. In an electric-arc lamp, the combination with parallel or converging electrodes and restraining means for holding the said electrodes in position, of means for releasing the electrodes, an electromagnetically-operated arc-striking and electrode-arresting device, and means operated by the forward movement of the arc-striking device for short-circuiting the electromagnet which operates the same.

3. In an electric-arc lamp the combination with the electrodes and feeding mechanism therefor, of a separate circuit through the lamp, such circuit having approximately the same resistance as the normal operating resistance of the lamp and said separate circuit being also closed during the operation of the feeding mechanism.

4. In an electric-arc lamp wherein the regulation of the electrodes takes place through the action of one or more clutches and an arc-striking device, the combination with the electrodes, of means for releasing the clutch or clutches and operating the striker, and a separate circuit through the lamp mechanism closed during the action of the feed mechanism.

5. The combination with a pair of downwardly-projecting electrodes, of a differential magnet, one winding of which is in series with the electrodes, the other winding of which is in permanent shunt to the lamp, and an arc deflecting or extinguishing magnet, in shunt to the lamp-circuit, and said differential magnet being adapted to steady and give direction to the arc and the shunt-magnet being adapted to extinguish the arc when the voltage of the lamp becomes excessive.

6. In an arc-lamp, the combination with downwardly-pointed carbons, of a periodically-operated conducting arc-striker or carbon-arrester, and a magnetic field the source of which is a differentially-wound electromagnet, one winding being in series with the arc and the other in shunt thereto.

7. In an electric-arc lamp provided with an arc-striking device and an electromagnet for operating the same, a circuit-interrupter for the said electromagnet operated by the movement of the arc striking device.

8. In an electric-arc lamp provided with an arc-striking device and an electromagnet for operating the same, two armatures for the said electromagnet, one operatively connected with the arc-striking device and the other being a retarded or slow-acting armature adapted to operate a cut-out or short-circuiting device for the magnet.

Signed at New York, in the county of New York and State of New York, this 5th day of March, A. D. 1902.

HUGO BREMER.

Witnesses:
CHARLES A. TERRY,
WM. H. CAPEL.