Feb. 8, 1944. C. N. NEKLUTIN 2,341,159

MOTOR BOAT

Filed March 14, 1942 2 Sheets-Sheet 1

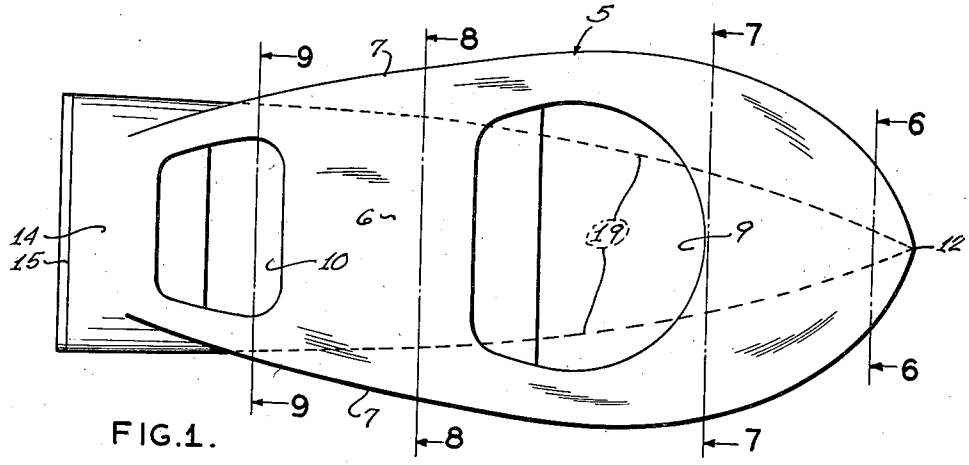

FIG.1.

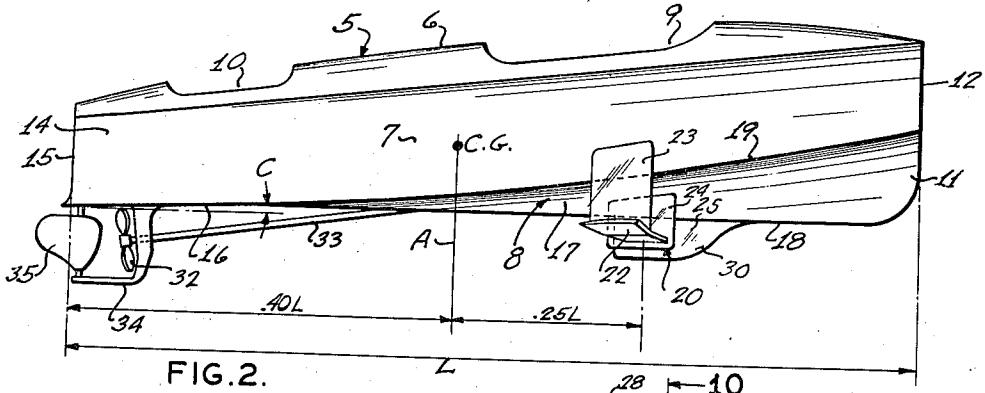

FIG.2.

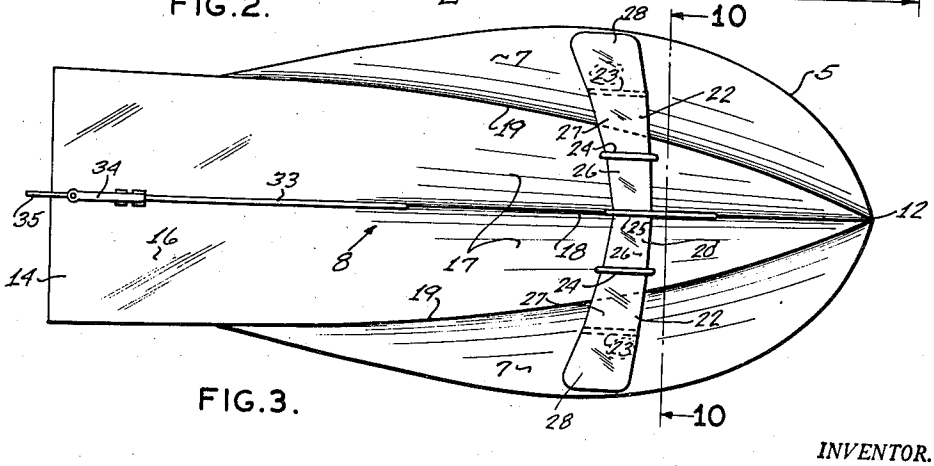

FIG.3.

INVENTOR.

CONSTANTINE N. NEKLUTIN

BY

ATTORNEY

Feb. 8, 1944. C. N. NEKLUTIN 2,341,159

MOTOR BOAT

Filed March 14, 1942 2 Sheets-Sheet 2

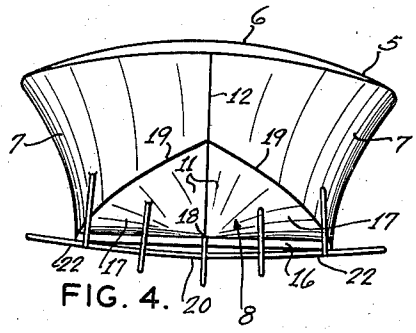

FIG. 4.

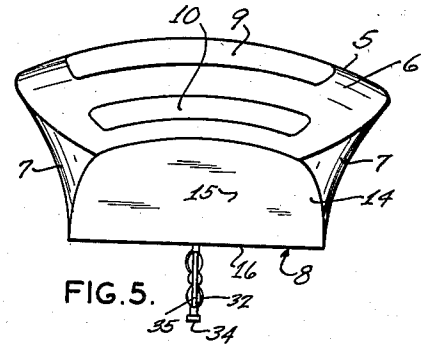

FIG.5.

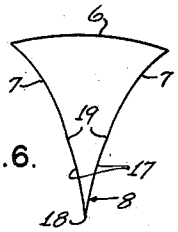

FIG.6.

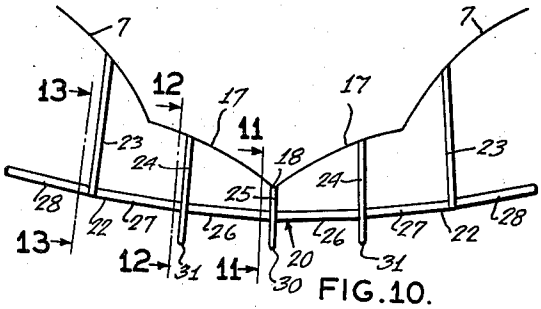

FIG.10.

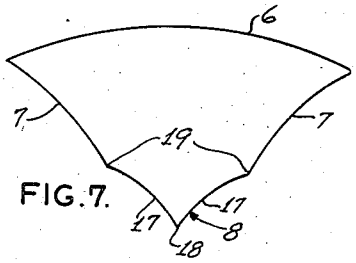

FIG.7.

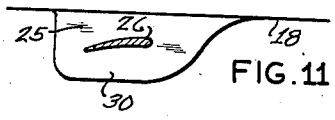

FIG.11.

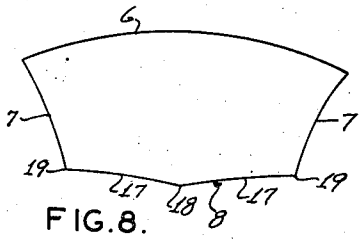

FIG.8.

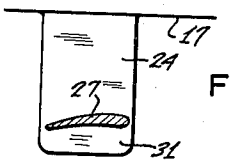

FIG.12.

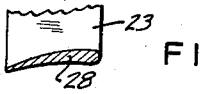

FIG.13.

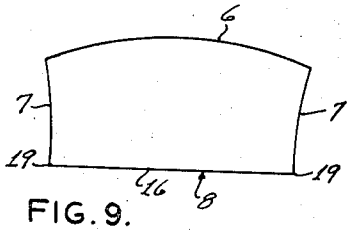

FIG.9.

INVENTOR.
CONSTANTINE N. NEKLUTIN
BY
ATTORNEY

Patented Feb. 8, 1944 2,341,159

UNITED STATES PATENT OFFICE

2,341,159

MOTORBOAT

Constantine N. Neklutin, Normandy, Mo.

Application March 14, 1942, Serial No. 434,768

7 Claims. (Cl. 114—66.5)

This invention relates generally to marine craft of the class generally known as motor boats and, more particularly, to a certain new and useful improvement in motor boats of hydroplaning type.

My invention has for an object the provision of a hydroplaning motor boat having a hull of unique form and shape and employing planing and hydrofoil surfaces in such manner as to effect and obtain high speeds at the expense of relatively low propelling power and operational or dynamic stability and maneuverability at all speeds with a minimum of hull shock from wave impact.

My invention has for another object the provision in a hydroplaning boat of the character mentioned of such improvements in the form and contouring of the hull and in the form and relative arrangement of the planing and hydrofoil surfaces on the hull as to effect approximate maximum directional stability particularly on turns and a minimum of side slipping or skidding in banking.

My invention has for a further object the provision in a high speed motor boat of the character indicated of planing and hydrofoil surfaces so located relatively to the boat hull that the center of gravity may be located relatively near the longitudinal center of the boat for greatly improving the longitudinal stability of the boat and permitting a more complete utilization of the total available hull space. By proper weight distribution of the carried load throughout such space, the dynamic and other operating characteristics of my new motor boat will not be impaired to any material extent, and since the boat is intended for travel along the surface of the water at high speeds, the boat hull is advantageously streamlined in order to minimize its air resistance, such streamlining serving additionally to augment the directional stability of the boat.

The foregoing and other objects and advantages will appear readily from the following description of a preferred embodiment of my invention, as illustrated by the accompanying drawings, in which—

Figure 1 is a top plan view of a motor boat embodying my invention;

Figure 2 is a side elevation of the motor boat;

Figure 3 is a bottom plan view of the boat, showing the form and relative arrangement of the planing and hydrofoil surfaces;

Figures 4 and 5 present, respectively, bow and stern end views of the boat;

Figures 6, 7, 8, and 9 illustrate the hull of the boat in different transverse sections thereof and in outline only, as viewed, respectively, from the lines 6—6, 7—7, 8—8, and 9—9, Figure 1;

Figure 10 is an enlarged sectional elevation of the boat-hull, showing the hydrofoil and the manner of its support on the boat-hull, taken approximately along the line 10—10, Figure 3; and

Figures 11, 12, and 13 are views in transverse section of different portions of the hydrofoil, as viewed, respectively, from the lines 11—11, 12—12, and 13—13, Figure 10.

Referring now more in detail and by appropriate reference characters to the drawings, 5 designates the boat-hull generally, which includes a top wall or deck 6, opposite side walls 7, and a bottom wall or keel 8.

By preference, the top wall 6 is generally convex in its surface aspect and is cut away, as at 9 and 10, to provide openings or hatch-ways giving access to the hull interior.

The side walls 7 over a major portion of their longitudinal extent are upwardly and outwardly flaring, as appears from Figures 6 through 9, and converge relatively sharply toward the forward end of the hull to define, with the forward portion 11 of the bottom wall or keel 8, a sharp knife-like bow 12. The side walls 7 further converge somewhat more gradually toward the stern end 14 and join with the substantially vertical transverse stern wall 15, as shown in Figure 5. As will be observed from Figures 6 through 9 in particular, the degree of outward flare of the side walls 7 increases progressively and smoothly from the bow 12 to a maximum in the hull section of widest beam, Figures 1 and 7, and then decreases toward the stern end 14, as best seen in Figures 8 and 9.

The bottom wall 8 is formed to provide at the stern end 14 of the hull a substantially flat or planar surface 16 of suitable longitudinal extent, such surface constituting a hydroplaning surface as will presently more fully appear. The wall 8 extending forwardly from the planing surface 16 is of angulate form to present straight or concave upwardly and outwardly flaring wall portions 17, which define a relatively sharp keel line 18 extending to the bow 12. From the planing surface 16, the wall portions 17 progressively and smoothly approach a vertical inclination, as indicated in Figures 6 to 8, and converge longitudinally to provide the sharp bow portion 11. As best appears from Figures 3 and 4, the bottom wall portions 16 and 17 join with the hull side walls along juncture lines 19, which converge

smoothly toward, and meet in, the bow 12 of the boat.

It will be hence observed that the boat-hull 5 in lateral outline rearwardly from the bow 12 is of relatively narrow V-shape in the bow section, as appears from Figures 4 and 6, and presents a progressively increasing full-bodied appearance toward the stern, as indicated in Figures 7, 8, and 9. Thus, by reason of its unique form or shape, the hull 5 is adapted for dividing and laterally deflecting waves in a most effective manner, the latter effect being attained over the major portion of the hull length, whereby hull shock from wave impact is greatly minimized, the function of the hull in this respect being augmented by constructing the hull such that its length is about three times the width of the stern planing surface 16.

As so uniquely formed, the hull 5 is of a so-called streamlined character, which reduces its air resistance to a minimum when traveling at high speeds along the water surface. It may be stated that it is important to the proper streamlining of a boat of the type described that the hull be formed so that its maximum beam is somewhat less than one-half the boat length, although approaching this dimension, and such that the section of maximum beam is located at a distance of substantially one-third of the boat length from the bow end. This I attain in the hull 5, as indicated in a general way by Figures 1 and 3.

The hull bottom surface 16 at the boat stern provides a hydroplaning surface, as previously indicated, and is preferably flat or planar, although, if desired, it may be given a slight or shallow V-shape in transverse outline or a combination of a flat and V-shape. So that it may be fully effective in its planing action, the surface 16 is disposed below the horizontal plane of the hull keel line 18, as may be readily observed from Figure 2, and is inclined upwardly and forwardly so as to have a desired angle of incidence or attack. It may be stated that, in a boat of this character, the inclination of this planing surface may be such that, in the high speed hydroplaning operation of the boat, the effective angle of attack thereof with reference to the horizontal should be about three or five degrees, as indicated at C in Fig. 2.

20 designates a wing-like or hydrofoil structure, which is rigidly attached to the boat-hull near the forward or bow end, as illustrated in Figures 2 and 3. Such structure constitutes the principal means for effecting, in co-operation with the stern planing surface 16 provided by the hull 5, hydroplaning operation of the boat at high speeds. As shown by Figure 10 in particular, the hydrofoil 20 is arranged transversely beneath the hull 5 to extend below the keel line 18 and is of dihedral form generally to define upwardly inclined wing sections 22 on opposite sides of the keel line 18. The length of the hydrofoil 20 may approximate the maximum beam of the hull, as best appears from Figure 3, while the wings 22 thereof may be slightly, although appreciably, divergent in the direction of the hull stern, such features, together with the dihedral character of the hydrofoil, functioning in providing the boat with directional as well as lateral stability. In order further to increase the lateral stabilizing effect of the hydrofoil and to increase its function in supporting the forward portion of the hull during speed operation of the boat, each of the wing sections 22 is of progressively increasing width from its inner or keel end, as appears in Figure 3, or increasing the width in steps at supports 24 and 23, Figure 10.

The wing sections 22 are rigidly supported from the boat-hull by fin-like members or struts 23 and 24 and at the juncture of the sections below the keel line 18 by a keel plate 25. Each wing 22 is comprised of foil elements 26, 27, and 28, which are so formed that each in its sectional aspect, as indicated, respectively, by Figures 11, 12, and 13, is similar to the usual cambered airfoil section of an airplane wing. It will be noted from Figure 10 that the intermediate foil element 27 is inclined upwardly to a greater extent than the inner foil 26, while the outer element 28 is similarly inclined to a greater extent than element 27. Thus the central foil elements 26 of the wings are appreciably lower than the outer foil elements 28, and, while not here specifically shown, it will be understood that the foil elements 26 may be located in respective planes spaced downwardly from the planes of the intermediate foil elements 27 for increasing the water-depth thereabove for, in turn, increasing the efficiency of these elements at high speed.

The several foil elements of each wing 22 are inclined upwardly and forwardly with respect to the hull 5, so that such elements may have a desirable angle of incidence or attack in planing through the water. As best appears from the foil sectional elevations of Figures 11, 12, and 13, the inclination of the intermediate element 27 is somewhat greater than that of the element 26, and the inclination of the outer element 28 is to a substantially similar degree greater than that of the element 27. Since the efficiency of a hydrofoil section for high speed operation is higher when it has a relatively small angle of attack, it is important to the proper functioning of the hydrofoil 20 that the inclinations of the foil elements 26, 27, and 28 with respect to the horizontal, and as measured with the hull in a position such that its keel line 18 is horizontal, be of relatively small angular degree. For reasons which will appear, it is preferred to give the inner foil element 26 of each wing 22 an inclination substantially equivalent to or less than the minimum required for efficient function of the foil.

By reason of the greater angle of break of the outer wing foils 28, there is assured a positive angle of attack in the hydrofoil 20 during the initial movement of the boat, in the event that the keel in the bow zone is slightly lower than the portion thereof in the stern region. As the boat speed increases, the bow end of the hull tends to rise at a greater rate than the stern end, so that the effective inclination of the hydrofoil wings 22 in the water is thereby progressively increased, as will be appreciated. When a high speed is attained, the hull as supported substantially on the water surface by the forward hydrofoil 20 and the stern planing surface 16 normally will have its bow end at the keel somewhat higher than the stern keel portion, and, further, the wing ends of the hydrofoil 20 will be exposed above the water surface, while the central foil elements 26 thereof, as well as parts or all of the foil elements 27, remain submerged. Thus, at high speeds, the central foil elements 26 and portions or all of the intermediate elements 27 provide the principal hydroplaning support for the forward portion of the hull, hence the effective angle of attack of these elements at such speeds, as determined in part by the greater elevation of the hull bow with respect to the stern, should not be excessive. As

cordingly, it will now appear that, by forming the hydrofoil 20 such that the foil elements 26 have a minimum inclination, as of the degree indicated, while the inclination of the elements 27 is only slightly greater, the effective inclination or angle of attack of these elements resulting from such relative elevation of the hull bow at high speeds, will not greatly exceed at most the maximum permissible angle of attack for an efficient hydrofoil.

The ends of the hydrofoil wings 22 extending over the water surface during high speed operation of the boat provide for lateral stability of the boat, since upon tipping of the hull to one side, the wing on that side will re-enter the water and, through its upward planing action therein, return the boat to an even keel. The function of the hydrofoil 20 in this respect is particularly noticeable on turns, as the same tends to keep the boat on its turning course as well as to stabilize the banking position of the hull during turning. Also, by reason of the dihedral form of the hydrofoil 20 and the relatively greater angle of attack at its outer ends, the wing ends will have little resistance to breaking through the surface of the water as the boat attains high speed.

The dihedral angle of each element of the foil has a certain ratio to the angle of incidence of the element, preferably the lateral angle of each element being approximately twice as large as its angle of incidence. This ratio is important for maintenance of lateral stability during turns, as it will be shown later.

It is important to note here that in the hydrofoil 20, the length of each wing 22 is greater than its greatest width. This serves to increase the lifting power of the wings in the hydroplaning function thereof. With reference to Figure 3, it will appear that this dimensional relationship applies equally to the central foil elements 26, the combined length thereof being greater than the greatest width of either, and since these elements together with elements 27 provide the principal hydroplaning support for the forward hull portion at high speeds, the lifting power of the elements is thereby increased or augmented.

As shown by Figures 10, 11, and 12 in particular, my new hydrofoil-structure 20 includes plate-like elements or fins 30 and 31, which depend substantially vertically from the under surface of the hydrofoil 20 and so arranged that the plate-surfaces thereof substantially parallel the vertical plane of the hull keel line 18. In the present preferred embodiment of the boat, the element or fin 30 may be an integral part of the keel plate 25, while the elements or fins 31 may be extensions of the hydrofoil supporting struts 24. Although only three such elements are here illustrated, a greater or lesser number thereof may be provided, as desired. In the operation of the boat, these elements in particular serve as guide elements to counteract excessive side slipping or skidding of the hydrofoil, and hence of the boat hull, in either the forward or turning course of the boat. It may be noted that the struts 23 and 24, as well as the keel plate 25, will assist the elements 30 and 31 in this respect. Also, the struts 23, 24, the keel plate 25, and elements 30 and 31, as well as the hydrofoil 20 proper, by reason of its dihedral character, coact to provide a desirable directional control of the forward hull portion, so that the boat may be readily maintained on a given course. It may be repeated here that, for efficient function of the hydrofoil, its dihedral angle should be greater than the greatest angle of attack of the wing sections. The boat with hydrofoils has a strong tendency to tilt inward during turns. There are three torques responsible for such tendency, namely, one is produced by water pressure on the rudder, one is created by increased vertical force on the outward half of the planing surface, and the third and strongest is an increase of vertical forces acting on the outside portion of the hydrofoil and a decrease thereof on the inside portion of the hydrofoil. The only force tilting the boat outwardly is the insufficient centrifugal force. The addition of vertical surfaces near the hydrofoil is very essential by reason of the fact that they serve a double purpose, namely, they decrease a drift during turns and, in doing so, increase the centrifugal force, and also they create a torque tilting the boat outward.

A further unique feature of my new boat resides in its marked longitudinal stability particularly during high speed operation, resulting in great part from the location of the center of gravity of the boat near the longitudinal center of the hull and the planing surface 16 and hydrofoil 20 widely spaced longitudinally of the hull. According to the embodiment best known to me and as herein illustrated, the center of gravity of the boat is found at a distance, as measured from the hull-stern, of approximately .40 of the length of the hull. As shown in Figure 2, the length of the hull is represented by the dimensional line indicated as L, while the center of gravity, C. G., is found along the vertical line A. The line A and hence C. G. is distant forwardly from the hull-stern by approximately .40 L, as indicated in Figure 2. In a boat of the character illustrated, wherein the planing surface 16 is located at the hull-stern and the C. G. located as indicated, I have determined the most effective position of the hydrofoil 20 for the purposes of my invention is forwardly toward the hull bow and distant from the C. G. of the boat by approximately .25 L, this dimension being shown in Figure 2.

By such provisions, the longitudinal stability of even a relatively short boat may be considerably increased. Also, as a result of this arrangement and through the function of the relatively widely spaced planing surface and hydrofoil, my new boat will tend to move at high speeds along the water surface with the bow and stern portions in contact with the water, and will not have the tendency of so-called planing boats which lack a hydrofoil to skim over or leave the water surface. Hence, my new boat will tend to follow the surfaces of large waves and long swells smoothly and on a relatively even keel to a much greater degree than is possible with displacement boats or those merely provided with well-known hull planing surfaces, so far as I am aware. Furthermore, by reason of the fact that the water resistance of the hydrofoil 20 is relatively low, and since the total water contact area of the stern planing surface 16 and that portion of the hydrofoil 20 which remains submerged at high speeds is relatively small, the attainment of higher speeds at the expense of lowered propelling power is thereby considerably enhanced.

The boat may be powered by a suitable inboard engine (not shown) driving a propeller 32 through propeller shaft 33, which may be journaled at its outer end in a bracket 34 secured to the hull bottom. Rearwardly of the propeller 32, is a steering rudder 35 for effecting directional control of

the boat, and the lower end of the rudder 35 may be pivotally supported by the bracket 34, as shown.

It is to be understood that my new motor boat as herein shown and described is exemplary of a preferred embodiment of the invention, and that various modifications in the form, construction, arrangement, and combination of the several parts thereof may be made and substituted for those herein shown and described without departing from the nature and spirit of my invention.

Having thus described my invention, what I claim and desire to secure by Letters Patent is:

1. A motor boat hull having a substantially V-bottomed formation toward the bow and having a substantially flat-bottomed inclined planing surface terminating at the stern, and a hydrofoil rigidly fixed to the hull below the V-bottomed portion and extending transversely on opposite sides of the center line of the hull, whereby when the boat is propelled at high speed the hull is supported substantially by the hydrofoil and the flat-bottomed inclined planing surface.

2. A motor boat hull having a substantially V-bottomed formation toward the bow and having a substantially flat-bottomed inclined planing surface adjacent the stern, and an inclined hydrofoil of dihedral form rigidly fixed to the hull below the V-bottomed portion and extending transversely outwardly and upwardly on each side from the center line of the hull, said hydrofoil being of increased width and having greater inclination toward the outer ends.

3. A motor boat hull having a substantially V-bottomed formation toward the bow and having a substantially flat-bottomed inclined planing surface adjacent to the stern, said hull having its center of gravity located in a transverse line forwardly from the boat stern by a distance equivalent to substantially 40% of the hull length and having the flat-bottomed inclined planing surface beginning rearwardly from the center of gravity, and a hydrofoil of dihedral character fixedly mounted upon and carried beneath the forward V-bottomed portion of the hull, said hydrofoil being spaced downwardly below the keel of the hull and extending laterally on each side of the center line of the hull and being positioned forwardly from the center of gravity of the hull by a distance equivalent to substantially one-fourth of the length of the hull.

4. A motor boat hull having a substantially V-bottomed formation toward the bow and having a substantially flat-bottomed inclined planing surface terminating at the stern, a hydrofoil rigidly fixed to the hull below the V-bottomed portion and extending transversely on opposite sides of the center line of the hull, whereby when the boat is propelled at high speed the hull is supported substantially by the hydrofoil and the flat-bottomed inclined planing surface, and a plate-like fin between the hydrofoil and the keel of the hull disposed substantially in the plane of the center line of the hull.

5. A motor boat hull having a substantially V-bottomed formation toward the bow and having a substantially flat-bottomed inclined planing surface adjacent the stern, a hydrofoil rigidly fixed to the hull below the V-bottomed portion and extending transversely on opposite sides of the center line of the hull, whereby when the boat is propelled at high speed the hull is supported substantially by the hydrofoil and the flat-bottomed inclined planing surface, a plate-like fin between the hydrofoil and the keel of the hull disposed substantially in the plane of the center line of the hull, and a plate-like guide fin extending below the hydrofoil.

6. A motor boat hull having a substantially V-bottomed formation toward the bow and having a substantially flat-bottomed inclined planing surface adjacent the stern, plate-like fins rigidly fixed to and extending below the V-bottomed portion of the hull, and a hydrofoil of dihedral character rigidly carried at the lower extremities of said plate-like fins, said hydrofoil extending outwardly and being inclined upwardly and rearwardly from the center line of the hull and being increased in width and having greater upward inclination toward its outer ends.

7. A motor boat hull having a V-bottomed formation toward the bow and having a substantially flat-bottomed inclined planing surface adjacent the stern, said substantially flat-bottomed planing surface being inclined downwardly toward the stern at an angle not more than 5% from the line of the keel of the hull, a plate-like fin depending from the V-bottomed portion of the hull toward the bow in the plane of the center line of the hull, a hydrofoil structure of dihedral character rigidly carried by said plate-like fin extending transversely on each side thereof beneath the forward V-bottomed portion of the hull, said hydrofoil being comprised of intermediate and outer and inner foil portions of cambered character with the inner portions being inclined upwardly and rearwardly from the line of securement and the intermediate and outer portions inclined upwardly and rearwardly to greater extent than said inner portions and the hydrofoil being of increased width toward the outer ends, and plate-like fins rigidly connected with the hull and with said hydrofoil substantially at points between the inner and the intermediate and the outer portions.

CONSTANTINE N. NEKLUTIN.