Feb. 13, 1940. P. F. G. HOLST 2,190,317

BATTERY OPERATED RADIO APPARATUS

Filed May 16, 1936

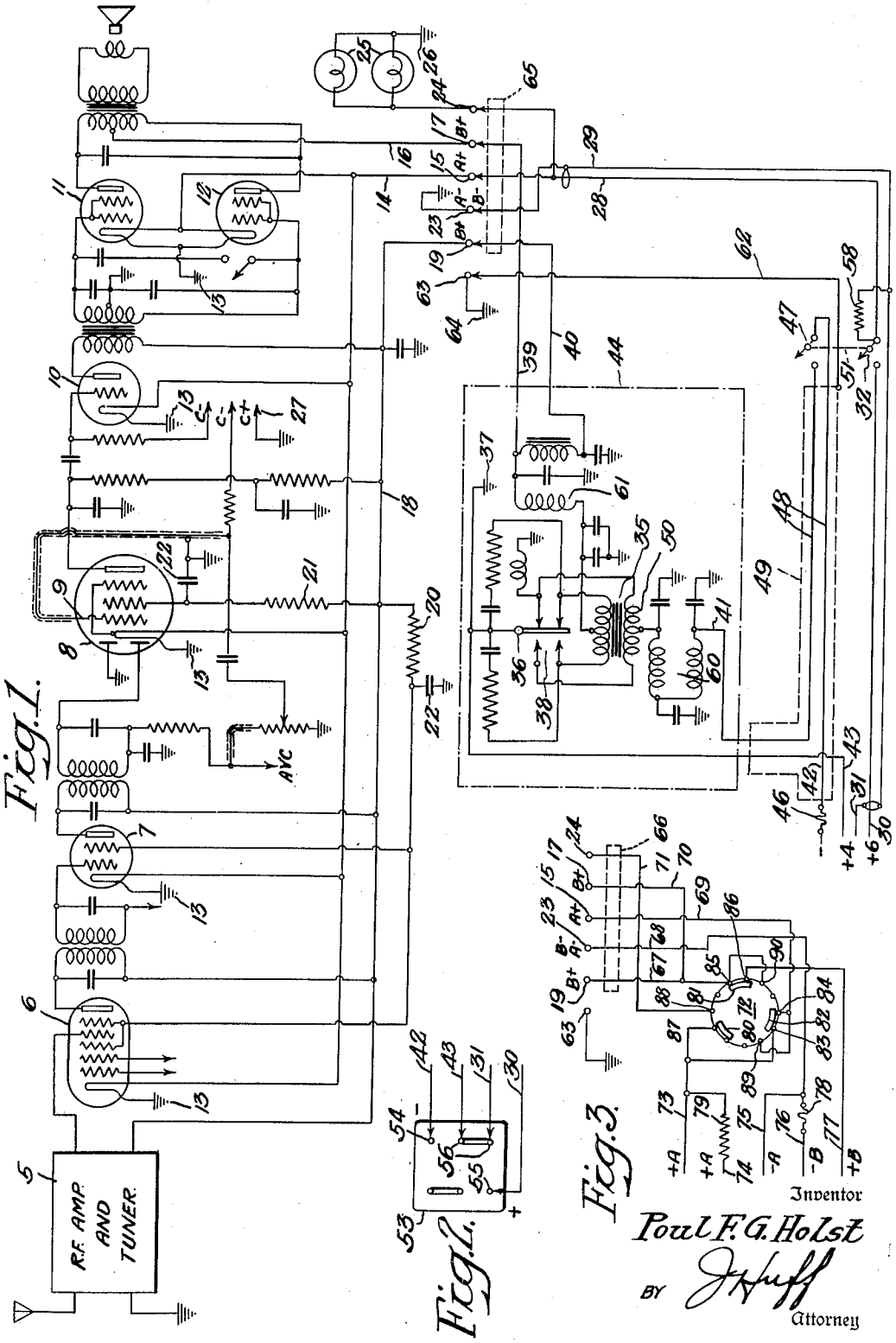

Fig. 1.

Fig. 2.

Fig. 3.

Inventor

Poul F. G. Holst

BY

Attorney

Patented Feb. 13, 1940 2,190,317

UNITED STATES PATENT OFFICE

2,190,317

BATTERY OPERATED RADIO APPARATUS

Poul F. G. Holst, Oaklyn, N. J., assignor to Radio Corporation of America, a corporation of Delaware

Application May 16, 1936, Serial No. 80,098

13 Claims. (Cl. 250—27)

The present invention relates to battery operated radio apparatus, and more particularly to battery operated radio receiving apparatus and the like, the tubes of which require filament and anode current supply from battery power sources.

In general, there are at present two common types of battery power supply means for radio and other electric discharge tube apparatus, one of which is the storage battery and vibrator rectifier generally used in automobile radio receivers, and the other is the air cell or single cell storage A battery and dry B batteries as used with radio receivers for camp and other use, beyond the reach of power lines.

It is an object of the present invention, to provide a battery operated radio apparatus which is adapted to use interchangeably, either type of power supply above referred to.

It is also a further object of the present invention, to provide an improved cathode heating circuit and anode potential supply circuit for a battery operated radio receiver, whereby it is adapted for economical operation in connection with a vibrator device and a storage battery, or ordinary A and B batteries.

In accordance with the invention, the filament or heater circuits and the anode circuits of a battery operated receiver are arranged to receive supply voltages through separate circuits from differing supply means or from differing portions of a storage battery, in which case one of said circuits includes a vibrator device.

It is, therefore, a further object of the invention, to provide an improved power supply system for a battery operated receiver or the like, which includes vibrator and filament supply circuits operable at differing voltages, the sum of which substantially equals the total voltage available from a storage battery and which circuits are supplied by differing portions of the battery to prevent coupling between said circuits.

The invention will, however, be better understood from the following description, when considered in connection with the accompanying drawings, and its scope will be pointed out in the appended claims.

In the drawing, Figure 1 is a schematic circuit diagram of a radio receiver embodying the invention,

Fig. 2 is a detail circuit diagram showing connections with a storage battery for the system of Fig. 1 and,

Fig. 3 is a similar schematic circuit diagram showing a modification of the supply circuits for the receiver of Fig. 1 for use with A and B batteries.

Referring to Fig. 1, a radio receiver adapted for battery operation, comprises a high frequency receiving system indicated at 5 which may include the usual radio frequency amplifier and variable tuning means and which is connected with a first detector and combined oscillator device 6. The latter is connected with an intermediate frequency amplifier 7 and second detector 8 of the diode rectifier type. The diode rectifier is coupled to a control grid 9 in the same device whereby it operates as a first stage audio frequency amplifier to supply amplified signals to an amplifier device 10 in turn coupled to a push pull output stage comprising ampifier devices 11 and 12.

The filament or heater supply circuit for the various tubes is preferably grounded to the chassis at each filament or heater as indicated at 13 and the filaments or heaters are connected in parallel between ground and a positive supply lead 14 connected with an input terminal 15. The high voltage B supply for certain of the tubes such as the output tubes 11 and 12 is provided through a lead 16 connected with an input terminal 17. Lower potential positive B supply for the anodes of the various tubes and the screen grids is supplied through a lead 18 having an input terminal 19. Screen grid connections for certain of the tubes are taken through filter resistors 20 and 21 provided with by-pass capacitors 22 whereby the screen grid potential is reduced from that provided to the anodes and the supply connection is suitably filtered to prevent coupling through the common supply means with other circuits.

The terminal board of the receiver includes a ground terminal 23 and a pilot light terminal 24, the latter being connected through a pair of pilot lamps 25 in parallel, to a ground connection 26. The connections for the terminals are provided by a suitable plug carrying connection elements for engaging with the terminals and having a plurality of leads connected therewith as indicated and comprising a positive A battery supply lead 28 enclosed in an outer metallic shield 29 extending from the plug through to two terminal ends 30 and 31. The positive lead 28 is connected with the terminal 15 and also with the terminal 24 while the negative outer shield 29 is connected with the terminal 23. In this manner the leads 30 and 31 may be connected to any suitable two volt source or filament supply, such as a single cell of a 6 volt storage battery, at the terminals

+4 and +6, for example, as indicated in the drawing. A switch 32 is provided for opening the positive lead 30 to de-energize the heater or filament circuit.

The B supply potentials are derived from a vibrator rectifier device comprising a step-up transformer 35 having a vibrator armature 36 connected to ground 37 and alternately to primary and secondary contacts 38, whereby the high and low voltage B supply output leads 39 and 40 are supplied with high voltage anode potential with respect to ground 37, when the primary circuit lead 41 is energized from the vibrator input leads indicated at 42 and 43.

The lead 43 is connected for the same position on the battery as the lead 31, that is, to the +4 volt terminal, and is connected to the vibrator arm 36 and to the vibrator ground 37, which is a part of the chassis of the vibrator, indicated by the dot and dash line 44. The vibrator may be mounted in the receiver or close to it but is insulated therefrom. The lead 43 is connected with the ground lead 31 which is connected with the shield 29 and thence to the chassis ground terminal 23. This arrangement prevents vibrator disturbances from entering the receiver chassis.

The negative vibrator supply lead 42 is connected with the negative terminal of the battery, and includes a fuse 46 and a switch 47 connected in circuit through shielded leads 48, the shield being indicated at 49. This is insulated from chassis 44 of the vibrator unit. The lead 43 is also included in this shield.

The switch 47, through one of the leads 48, is connected with the input lead 41 for the vibrator, supplying battery current at 4 volts to the primary 50 of the transformer 35 alternately through each half thereof as a result of the operation of the armature 36. As the operation of such units is well known and understood further description is believed to be unnecessary.

For simultaneous operation, the switches 47 and 32 are interconnected by mechanical means indicated by the dotted connection 51 so that the vibrator and the filament supply may both be controlled by common means.

The connections for the leads 42, 43, 30 and 31 with a storage battery 53 are indicated in Fig. 3. The battery has a negative terminal 54, a 6 volt positive terminal 55 and terminals 56 on the two cells joined by the strip 56 which are at 4 volts positive with respect to the negative terminal 54.

In case that the receiver filament or heater load, which is applied to the cell between the terminals 55 and 56, is not equal to the load imposed by the vibrator across the two cells in series between the terminal 54 and the terminals 56, a load resistor 58 may be connected across the filament circuit preferably at the switch 32 between the lead 28 and the shield lead 29 whereby the battery is uniformly loaded and discharge rate in all of the cells is substantially the same. In certain applications this load compensating resistor may not be necessary. C battery leads for internal bias supply are indicated at 27. Small battery cells (not shown) are included in the receiver for these voltages.

From the foregoing description, it will be seen that a battery operated receiver is provided with filament or heater and indicating lamp circuits, wherein the filaments or heaters and lamps are connected in parallel between a chassis ground connection and a heater or filament supply lead which extends from positive and negative terminals on the receiver, to the battery or potential source, with a grounded shield lead about the supply lead forming one of the filament conductors which is connected to the chassis ground. This shield lead is connected to an intermediate point on the battery which supplies a positive potential of 4 volts and the ungrounded filament supply lead is connected to the terminal of the battery which supplies a positive potential of 6 volts thereby establishing on the filament circuit a difference in potential of two volts.

The remainder of the battery voltage, of four volts, is utilized in the vibrator device by connecting the vibrator ground lead to the positive 4 volt terminal of the battery in common with the ground connection for the filament circuit. The negative terminal of the vibrator supply circuit is connected with the negative terminal of the battery whereby a difference of 4 volts is applied to the vibrator. The filament circuit and the vibrator supply circuit are shielded one from the other thereby preventing interference from vibrator action from reaching the filament circuit. This is further prevented by a radio frequency filter 60 in the vibrator input circuit lead 41 and a second filter 61 in the vibrator output circuit which is connected with the output leads 39 and 40. These are preferably high or radio frequency filters effective against ultra-short waves which are found to be present when operating vibrators of the type shown in the drawing.

In order further to provide effective shielding, the shield 49 is connected through a lead 62 with the receiver chassis by means of a terminal 63 connected to the chassis as indicated by the ground connection 64. The vibrator frame or ground 44 is not connected with the shield 49. The only ground connection to the receiver is through the lead 43.

All of the leads provided in connection with the terminals 19, 23, 15, 17 and 24 may be carried by a plug indicated by the dotted outline 65 which may be removed along with the connection 62 when the vibrator is removed from circuit. The leads in connection with the battery are usually provided by suitable clips indicated by the arrow connections in Fig. 2.

Referring now to Fig. 3, A and B battery connections for the receiver may readily be provided by inserting a second plug 66 in place of the plug 65, the plug 66 carrying terminal connections 67 to 71 inclusive which are connected through a switch 72 with A and B battery leads, the A battery leads being indicated at 73, 74, 75 and the B battery leads being indicated at 76 and 77, the leads 76 including a fuse 78 and the leads 74 including a series resistor 79.

The switch may comprise a series of contacts arranged around the periphery of a movable insulating element, which contacts may be connected by rotation of the element, by contact segments indicated at 80, 81 and 82. The segments are shown in the "on" positions, and are movable to the "off" position by counter-clockwise rotation from the positions shown.

As shown, the segment 82 serves to connect a contact 83 with a contact 84 completing a circuit connection between the A battery positive lead 73 and the positive A battery terminal 15 of the receiver through the lead 69. Since the negative A battery lead 75 is connected with the lead 68 and the negative A battery terminal 23, the filament or heater circuit is completed through the A battery, which may be of any suitable type adapted to be connected between the leads 75 and either of the leads 73 or 74 depending upon

the voltage of the A battery. For a storage battery cell connection, with the lead 73 at 2 volts, or air cell battery connection with the lead 74 at 2.5 volts, the series resistor 79 is effective to limit the voltage in the latter connection.

At the same time the A battery circuit is completed, the B battery circuit is completed through the segment 81, connecting terminals 85 and 86, to provide a connection between the B battery supply leads 67 and 70 with the B battery leads 77. The pilot or dial lamp terminal 24 is energized by further rotation of the control switch to the right, in a clockwise direction, to cause the segment 89 to connect the terminals 87 and 88 providing a connection between the leads 71 and 73. The A battery and B battery connections tube circuits are maintained through additional contact provided by the contact 89 and 90 with the terminals 86 and 83.

For simplifying the B battery connections, it will be seen that the screen grid and low voltage anode circuit terminal 19 is connected with the high voltage B terminal 17 through the lead 70 in connection with the lead 67 whereby a single B battery lead 77 and the positive supply voltage is required. As A and B battery connections are well known the same are not illustrated in connection with the batteries.

The switch 72 may be arranged in any suitable manner other than that shown, to provide an open circuit condition in the A and B battery leads for the "off" position and having two closed circuit or "on" positions, one of which provides additional contacts for energizing the pilot lamp circuit, whereby the pilot or dial lamp may be utilized for tuning, and then its current may be cut off to economize on battery consumption while listening to a program. With this arrangement, any similar circuit in the receiver apparatus may be energized and de-energized while the apparatus is energized. This is a desirable feature of the potential supply system since it further adapts the receiver connections for ordinary A battery operation in a manner to reduce the current drawn therefrom over the longer periods of operation when listening to a selected program.

Since the vibrator supply source is not used, the leads in connection with the plug 66 are not shielded and accordingly the chassis ground connection terminal 63 is not utilized.

It will be noted that in this case, the negative A battery lead 75 and the negative B battery lead are connected together, through the lead 68, to the common grounded chassis terminal 23 as in the preceding circuit, whereby the change to vibrator operation involves no internal or external changes in the wiring of the receiver.

This circuit arrangement, as shown and described herein, has the added advantage that for vibrator and storage battery operation, the same separation of A and B supply sources is obtained as in connection with A and B batteries, because of the fact that the filament circuits of a receiver are connected to a separate portion of the storage A battery from that to which the vibrator is connected. This connection arrangement further isolates the filament and vibrator circuits, and results in a material reduction of noise in a battery operated receiver when connected for vibrator operation, since ripple currents in the vibrator circuit are entirely confined to a separate supply source and circuit but without requiring extra battery equipment.

Furthermore this type of receiver with interchangeable connections external thereto greatly simplifies the adaptation of such receivers for combined automobile and extended use beyond the point of supply available in connection with an automobile storage battery. In use, the battery connections are made by a simple plug connection which is interchangeable in connection with the terminals on the receiver with a plug connection for the vibrator supply circuit and the storage battery connections, thus involving no degree of skill on the part of the user to make the changes from one mode of operation to the other, and thereby greatly extending the usefulness of the automobile or battery type of receiver without complication in the matter of controls and adapting devices.

In a preferred embodiment of the invention the vibrator device may be built into and insulated from the receiver chassis in the manner indicated, and may then be connected in use only when a storage battery supply is available.

I claim as my invention:

1. In a battery operated signal amplifying apparatus including a plurality of electric discharge devices, a cathode heating circuit having a chassis ground connection and a common supply lead provided with external terminal means, means providing anode and screen grid supply connections for said apparatus having external terminal means associated with said first-named terminal means, a vibrator potential supply device connected with said last-named terminals, said vibrator device being designed to operate with a potential of substantially four volts and said filament heating circuit being designed to operate with a potential of substantially two volts, whereby said vibrator and cathode heating circuits may be connected with the terminals of a storage battery with a common connection at an intermediate tap thereon, filament circuit supply connections for said first-named terminals including a shielded conductor, and separate supply leads for said vibrator device.

2. A system in accordance with claim 1 further characterized by the fact that means are provided for equalizing the battery load provided by the cathode heating circuit and vibrator supply circuit.

3. A system in accordance with claim 1 further characterized by the fact that external filament heating circuit connections and vibrator supply connections therefor are provided by a detachable plug and that a second plug is provided for attaching A and B battery leads to the same terminals for A and B battery operation.

4. A battery operated radio receiver having A and B battery supply terminals adapted for operation in connection with a storage battery and a vibrator B potential supply device, cathode heating current supply leads connected with said terminals, said leads being shielded, supply leads for said vibrator device, means providing one circuit for connecting said vibrator device with a portion of a storage battery, means providing a separate circuit for connecting said cathode heating circuit with a different portion of said battery whereby the cathode heating circuit load and vibrator load are apportioned to differing portions of said battery, and means providing a common ground connection for said circuits at an intermediate tap point on said battery.

5. In combination, battery operated radio apparatus or the like, adapted for operation in connection with A and B batteries for cathode heating and plate potential supply, respectively, and

alternatively in connection only with a storage battery for cathode heating and said battery in conjunction with a vibrator B supply device for plate potential supply, means providing an A supply lead with said receiver for cathode heating and separate vibrator supply circuits, said means further being arranged to provide a common intermediate tap connection for said circuits on said storage battery, whereby the load thereon provided by the vibrator device and the cathode heating circuit may be applied to differing portions thereof, and thereby separating the potential sources for vibrator and cathode heating within the battery.

6. Battery operated radio apparatus as defined in claim 5, further characterized by the fact that means providing A and B battery connections include a switch and a pilot lamp circuit in the apparatus which may be energized and de-energized through operation of the switch while the apparatus is energized.

7. In combination, a battery operated receiver having separate cathode heating and anode circuits, and means for supplying operating current to said circuits from a storage battery comprising a vibrator power supply device connected with said anode circuits and having a pair of low voltage supply leads, a pair of leads one of which provides a shield for the other, connected with said cathode heating circuit, said vibrator and cathode heating circuit being designed to operate at different potentials, the sum of which is equal substantially to the potential supplied by said storage battery.

8. A battery operated receiving system in accordance with claim 7, further characterized by the fact that the vibrator device is insulated from the receiver chassis and is interconnected therewith through a common ground connection to an intermediate tap on the battery through said shield lead.

9. A battery operated receiver in accordance with claim 7, further characterized by the fact that the battery power connections thereto are the same for both A and B battery operation and for storage battery and vibrator operation, and means providing an interchangeable plug connection therewith providing either type of connection.

10. In combination, a battery operated receiver having separate cathode heating and anode circuits, means for supplying operating current to said circuits from a storage battery, comprising a vibrator power supply device connected with said anode circuits and having a pair of low voltage supply leads, a pair of leads connected with said cathode heating circuit, said vibrator device and cathode heating circuit being designed to operate at differing potentials, the sum of which is equal to the potential supplied by said storage battery, said cathode heating circuit and vibrator supply circuit being thereby adapted to be connected in common to an intermediate terminal on the battery source of supply, and means for grounding said terminal to the receiver chassis comprising a shield for one of the cathode heating circuit supply leads, which shield provides the other conductor.

11. In a battery operated receiving system, means providing anode potentials including a battery and a vibrator device operating from a certain portion thereon, means providing cathode heating current including a differing portion of the same battery, and said anode potential supply means and said cathode heating current supply means being interconnected only at said battery.

12. In combination, a battery operated receiver having separate cathode heating and anode circuits, and means for supplying operating current to said circuits from a storage battery comprising a vibrator power supply device connected with said anode circuits and having a pair of low voltage supply leads, one of which is connected with one side of said cathode heating circuit at the battery end thereof, said vibrator and cathode heating circuits being designed to operate at differing potentials, the sum of which is equal substantially to the potential supplied by said storage battery.

13. The combination, with radio receiving apparatus having a cathode heating circuit and a plate circuit, of a power supply circuit system for supplying electric current to said circuits comprising a storage battery having a plurality of cells connected together in series, voltage step-up means having a low-voltage input in circuit connection with certain of the cells of said storage battery and a high-voltage output in circuit connection with the plate circuit of said radio receiving apparatus, and circuit connections connecting the cathode heating circuit of said radio receiving apparatus with certain of the cells of said storage battery other than the cell or cells thereof in circuit connection with the input of said voltage step-up means.

POUL F. G. HOLST.