June 5, 1923. 1,457,853

K. C. O'BRYAN ET AL

JUSTIFYING DEVICE FOR TYPEWRITERS AND THE LIKE

Filed March 18, 1922 3 Sheets-Sheet 1

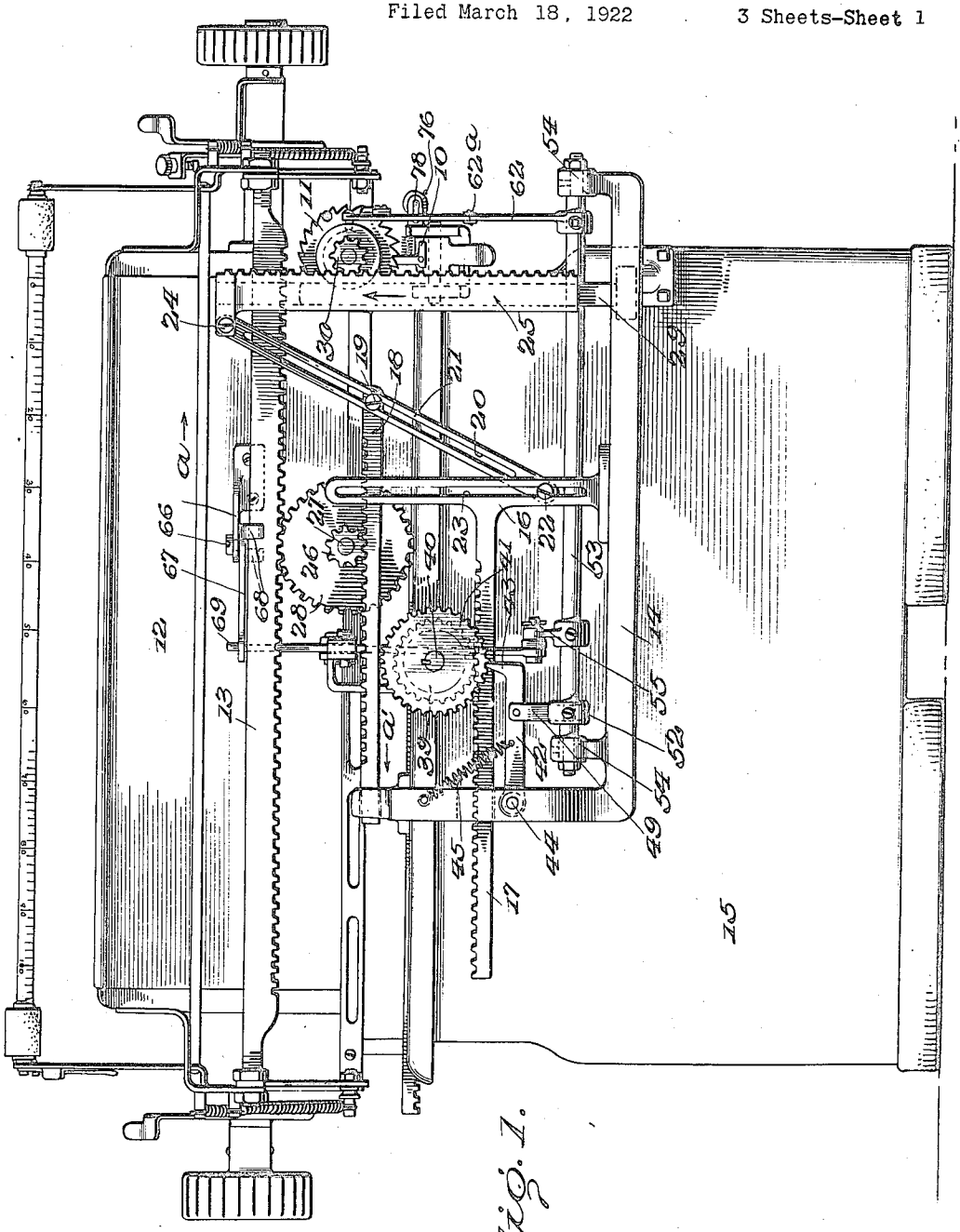

Fig. 1.

WITNESSES

W. A. Williams

Myron G. Clark

INVENTORS

K. C. O'Bryan and

J. W. O'Bryan.

BY

Munn & Co

ATTORNEYS

June 5, 1923. 1,457,853

K. C. O'BRYAN ET AL

JUSTIFYING DEVICE FOR TYPEWRITERS AND THE LIKE

Filed March 18, 1922 3 Sheets-Sheet 2

Fig. 2.

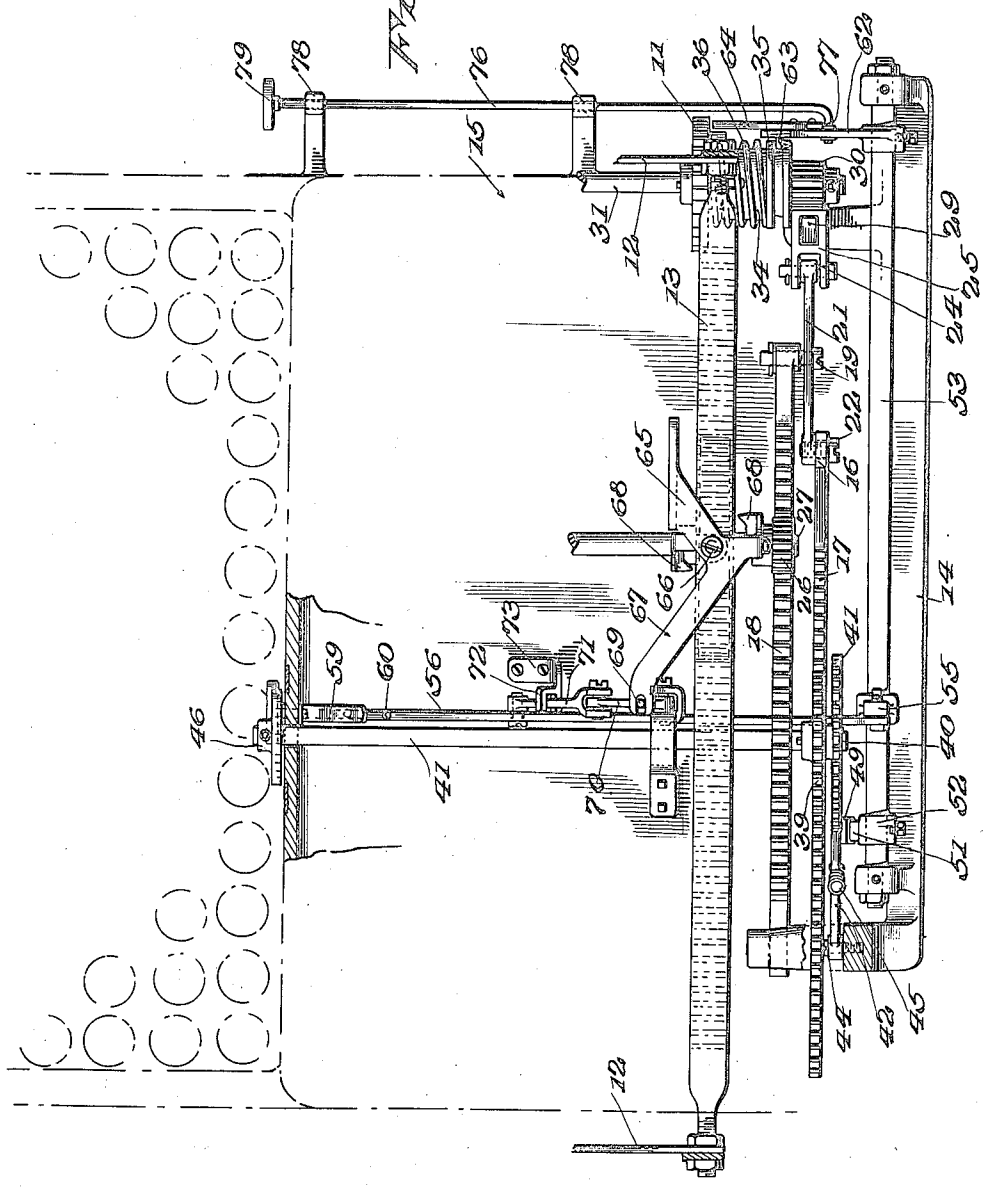

WITNESSES

W. A. Williams.

Merton L. Olsen

INVENTORS

K. C. O'Bryan and
J. W. O'Bryan.
By
Munn & Co
ATTORNEYS

June 5, 1923. 1,457,853

K. C. O'BRYAN ET AL

JUSTIFYING DEVICE FOR TYPEWRITERS AND THE LIKE

Filed March 18, 1922 3 Sheets-Sheet 3

Fig. 3.

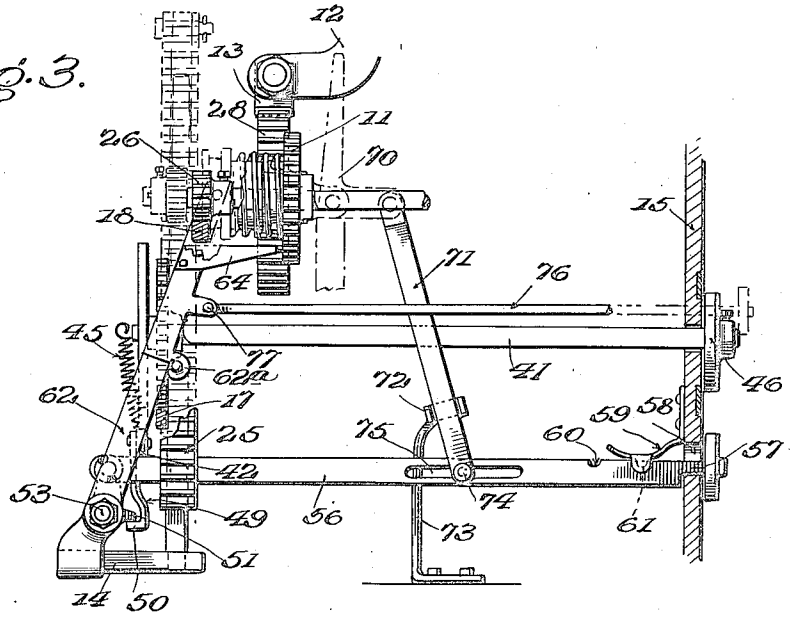

Fig. 5.

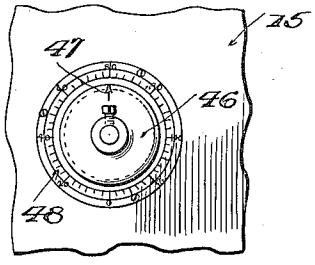

Fig. 4.

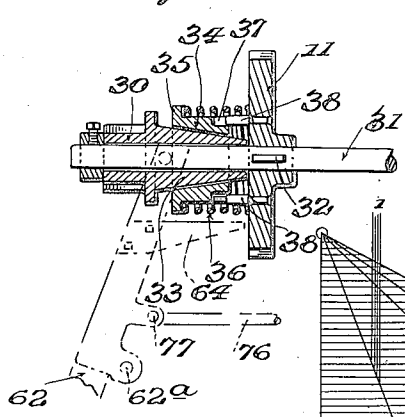

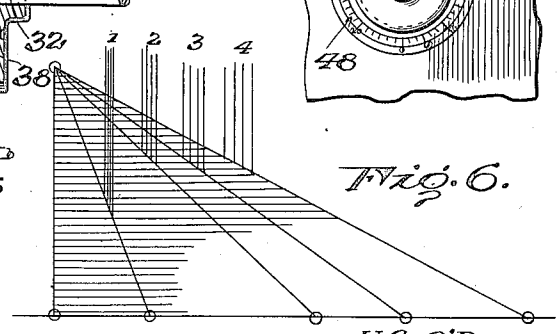

Fig. 6.

WITNESSES

W. A. Williams.

Myron L. Olear

INVENTORS

K. C. O'Bryan and
J. W. O'Bryan.

BY

Munn & Co

ATTORNEYS

Patented June 5, 1923. 1,457,853

UNITED STATES PATENT OFFICE.

KENNETH C. O'BRYAN AND JAMES WM. O'BRYAN, OF WASHINGTON, DISTRICT OF COLUMBIA.

JUSTIFYING DEVICE FOR TYPEWRITERS AND THE LIKE.

Application filed March 18, 1922. Serial No. 544,872.

To all whom it may concern:

Be it known that we, KENNETH C. O'BRYAN and JAMES W. O'BRYAN, citizens of the United States and residents of Washington, in the District of Columbia, have invented certain new and useful Improvements in Justifying Devices for Typewriters and the like, of which the following is a specification.

Our present invention relates generally to typewriting machines, and more particularly to improvements therein and attachments thereto having for their purpose the justification of lines of typed matter and the graduated spacing of characters in a line, the invention being applicable to typewriters, stencil cutters and other key actuated devices having movable carriages and a normally unadjustable escapement control for the carriage.

Our primary object is to permit of adjustment in respect to the spaces between letters for either a full line or any portion of a line of typed matter, in order to completely justify lines, by an apparatus which is readily applicable to typewriters and similar machines.

It is a well known fact that typewriters ordinarily provide for regular releasing movements of their carriages, which movements are standardized in respect to the particular type employed in the machine, and are ordinarily capable of adjustment to a limited extent only, as in the case of tabulating devices, and not, even in this instance for the purpose of, or ordinarily capable of use in, line justification.

By the use of our improved device a wide range or graduation in the extent of each feed movement of the carriage may be provided for without interfering with the normal standardized operation of the escapement and by means capable of easy quick application to a typewriter as well as adaptability to typewriting machines of various makes.

In the accompanying drawings which illustrate our present invention and form a part of this specification,

Figure 1 is a rear elevation showing certain parts of a conventional typewriter and illustrating the practical application of our invention thereto,

Figure 2 is a sectional top plan view thereof,

Figure 3 is a sectional side view,

Figure 4 is a detail section through the ratchet or click wheel and the clutch provided therefor,

Figure 5 is a front elevation showing the controlling dial, and

Figure 6 is a diagram illustrating different positions of a member controlling spacing between typed characters.

Referring now to these figures our invention proposes an apparatus applicable to a typewriter between the escapement mechanism thereof, shown in the present instance of conventional form as including a click mechanism 10 and a ratchet or click wheel 11, and the carriage 12 shown as provided with a rack bar 13, it being understood that the carriage is in this instance as it is in the ordinary typewriters of various makes constantly under tension to move the same in one direction by means of a spring which we have made no attempt in the present instance to show. It is also to be understood that the click mechanism 10 is operated, through connections we have made no attempt to show, and in the well known manner, upon depression of any printing key or the space bar, so that the escapement including the parts 10 and 11, functions as the usual escapement.

Our improvements may be mounted in a supplemental frame 14 secured at the rear of the main frame 15 of the typewriter and supporting in horizontally slidable relation an upright vertically slotted adjusting slide 16 having a horizontally outstanding rack bar 17, and also supporting a horizontally slidable controlling rack bar 18, the latter movable in portions of the frame 14 above and parallel with the rack bar 17 of the adjusting slide.

The rack bar 18 has at one end an angular pin 19 disposed in the lengthwise slot 20 of an inclined controlling arm 21, the latter having a laterally projecting pin 22 slidably disposed in the vertical slot 23 of the adjusting slide 16 and having at its upper end a laterally projecting pin 24 pivotally connecting the same to the upper end of a vertically shiftable rack bar 25.

The controlling rack bar, whose move-

ment is controlled by the position of the inclined control arm 21, is in engagement with a gear 26 mounted on a shaft 27, the latter having a larger gear 28 thereon engaging the carriage rack bar 13 so that it is obvious that through the carriage controlling spring tending to move the carriage in the direction of the arrow *a* in Figure 1, the controlling rack bar 18 will likewise be out of tension at all times tending to move the same in the direction of the arrow *a'* and this tension will of course be communicated through the pin 19 to the inclined arm 21 tending to shift the vertical rack bar 25 upwardly at all times in view of the fact that the adjusting slide 16 is held immovably in position except when the parts are to be adjusted.

The vertical rack bar 25 is tubular in form as will be seen by a comparsion of Figures 1 and 2 and is mounted to slide vertically on an upright 29 of the supplemental frame 14, its rack teeth being in engagement with a gear 30 the latter as most clearly shown in the detail Figure 4 mounted loosely on a shaft 31 to which the click wheel 11 is secured by suitable means as for instance a key 32. Extending toward the click wheel 11, gear 30 has a conical extension 33 forming one part of a clutch the other part of which is in the nature of a conical sleeve 34 having a flange 35 at one end engaged by a spring 36 around the sleeve, one end of which bears against the click wheel 11 so as to normally shift the clutch collar 34 rearwardly into engagement and clutching action with the inner port or cone 33. Collar 34 has sockets 37 into which pins 38 projecting laterally from the click wheel 11 loosely project so that it becomes obvious that movement of the vertical rack bar 25 in an upward direction depends upon release of the click wheel 11 by the click mechanism 10 through the clutch, disengagement of the latter of which in turn obviously permits of unlimited movement of the carriage as far as the escapement is concerned.

The rack bar 17 of the adjusting slide 16 is engaged by a gear 39 upon the rear portion of a shaft 40, gear 39 being secured on the shaft and the latter having at its rear end a second locking gear 41 the teeth of which are normally engaged by a locking dog 42 having for this purpose a gear engaging nose 43 at one end and pivotally mounted at its opposite end at 44 upon a portion of the bracket 14. This dog 42 is normally controlled and held in engagement with the locking gear 41 by a spring 45 and it thus becomes obvious that the adjusting slide 16 is normally held immovable.

Shaft 40 extends forwardly through whatever portions of the frame 15 of the typewriter it may be necessary to extend the same and is provided at its forward end beyond the front of the typewriter frame 15 with an index wheel 46 secured thereon and having a pointer 47 to coact with the circular dial 48 upon the front of the frame 15 around the index wheel, the dial being graduted from zero to a point corresponding to the greatest desired number of spacing movements of the carriage during the typing of a line and it is thus obvious that upon rotation of shaft 41 which thus becomes the adjusting shaft, the adjusting slide 16 will be shifted to the right or left depending upon the direction of such rotation and providing of course the dog 42 has been lowered against the tension of its spring 45 so as to release the locking gear 41 for rotation.

In order to relasease the dog 42 it is provided with a depending arm 49 having a rearwardly bent lower end 50 as seen in Figure 3, the latter adapted to be engaged by the forwardly projecting lug 51 of a collar 52 secured upon a shaft 53 mounted in bearings 54 of the rear supplemental frame 14, this shaft also having a rigid upright arm 55 pivotally connected to the rear end of a controlling bar 56, the latter like the shaft 41 being extended forwardly through the controlling typewriter frame 15 at any suitable point of the latter, with a forward reduced end 57 projecting through a slot 58 in the front wall of the frame 15, a spring 59 normally holding the forward end of this bar down so that it becomes necessary to raise the reduced forward end 57 against the tension of spring 59 in order to shift the bar forwardly in the direction of its length to rock shaft 53. It will be noted from Figure 3 that when bar 56 is elevated and shifted forwardly to rock the shaft 53, a notch 60 in the forward portion of its upper edge receives a protuberance 61 of spring 59 so as to hold the bar temporarily in its forwardly shifted position.

Upon forward shifting movement of the controlling bar 56 and consequent rocking movement of shaft 53, an upwardly projecting forwardly inclined clutch releasing arm 62, rigidly connected to the shaft and upstanding therefrom adjacent to one end thereof, is swung forwardly so that its upper laterally projecting pin 63, which is normally disposed rearwardly of the rear flanged end 35 of the clutch sleeve 34, will by engagement with this flange 35 shift the clutch sleeve 34 forwardly against the tension of its spring 36 and thus release the clutch so that gear 30 may be rotated on shaft 31 independent of the click wheel 11, the clutch releasing arm 62 also having a forwardly projecting finger 64 adjacent to its upper end which upon forward move-

ment of the arm is extended across one side of the click wheel 11 and beneath one of the teeth thereof so as to lock the click wheel against accidental rotation while the adjusting slide 16 is moved, it being obvious that when this adjusting slide 16 is moved to vary the inclination of the inclined controlling arm 21, the latter is rocked on the slide pin 19 of the adjusting rack bar 18 as a fulcrum and therefore the vertically shiftable rack bar 25 must move up or down as the case may be.

An upper bracket 65 movably supports by a pivot 66 one end of a locking arm 67 having oppositely angular and downturned gripping teeth 68 adjacent to its said pivoted end as particularly shown in Figure 2, disposed at opposite sides of the carriage rack bar 13 so that when the opposite end of this arm or locking lever 67 is shifted rearwardly from the normal position shown in Figure 2, its teeth 68 will engage and grip opposite sides of the carriage rack bar 13 and lock the rack bar and consequently the carriage from movement. The free end of this locking lever 67 is slotted as shown in Figure 2 to receive therethrough the upright arm 69 of a bell crank 70 whose lower forwardly projecting arm is pivotally connected to the upper end of a rearwardly and upwardly inclined connecting bar 71. The lower portion of this arm is slidable through the guide 72 of a bracket 73 shown in Figure 3 and the lower end of the connecting arm has a laterally projecting pin 74 extending through a lengthwise slot 75 of the controlling bar 56 so that when the reduced forward end of this bar is initially raised the connecting bar 71 is elevated and the bell crank 70 is rocked upwardly and rearwardly in order that the locking lever 67 may be rocked thereby and its toothed locking pieces 68 shifted into binding engagement with opposite side faces of the carriage rack bar 13 whereby the carriage will be held stationary while adjustment of the slide 16 is being effected.

It is thus obvious that the particular degree of inclination of the slotted controlling arm 21 controls the extent of lengthwise movement of the controlling rack 18 upon step by step movement allowed the vertically shiftable rack bar 25 at each operation of the escapement, and it will be observed from the diagram Figure 6 that as the inclination of this controlling arm 21 approaches the vertical, the spaces are reduced in extent as indicated by the series of lines 1 while as the inclination is increased the spaces become greater in extent as seen by a comparison of the lines 2, 3 and 4, it being obvious from this that a gradual change in the degree of the spaces may be effected from practically a zero point up to the greatest inclination of which the controlling arm is capable and that this change will be registered by the cooperation of the pointer 47 with the circular dial 48 so as to indicate the total number of spaces in a line corresponding to each and every position of the controlling arm.

In this operation and in the adjustment of the parts, it is obvious that while the adjusting slide 16 is normally locked by the dog 42, this dog is released, the carriage rack bar 13 is gripped and held, and the click wheel 11 is securely locked against rotative movement whenever the controlling bar 56 is raised and pulled forwardly, so that the key controlled escapement of the machine and the carriage will be held in the same relative positions during adjustment of the slide 16 in order that after this slide has been shifted by rotation of the shaft 41 and the controlling bar 56 is pushed inwardly and dropped to its normal position as seen in Figure 3, the carriage and escapement will resume operations from the same point exactly that operation ceased when it was desired to make adjustment. It is plainly to be seen from this that we avoid any jump or irregular spacing of the parts where for instance it is desired to change the spacing between characters during the typing of a line, that is after the line has been started and before it has been completed.

It will be noted from Figure 3 in particular that the clutch releasing bar 62 is in two parts normally in endwise abutting relation and so hinged at 62^a that the upper part carrying the click wheel locking finger 64 and the clutch sleeve releasing pin 63 will move with the lower part when shaft 53 is rocked in a direction capable of throwing out the clutch sleeve and locking the click wheel. The upper part of this clutch releasing bar, being movable on the hinge 62^a in a forward direction independently of the lower part permits the clutch to be thrown out independently of the action of the other parts controlled by the rock shaft 53 and we therefore provide an independent clutch releasing rod 76 whose rear end is loosely attached at 77 to the upper portion of the clutch releasing bar, this rod 76 being movable through guides 78 at one side of the typewriter frame 15, as seen in Figure 2, and provided at its forward end with a button or handle 79 so that when it is desired to move the carriage for a considerable portion of a line without necessitating a step by step shifting thereof through the escapement as in its normal operation, the operator may simply pull rod 76 forwardly which will rock the upper portion of the clutch releasing bar 62 in a forward direction upon the hinge 62^a and the clutch sleeve 34 may in this way be shifted forwardly to released position so that the carriage is thus free to be shifted to the point desired in a single movement.

We claim:

1. A line justifying device for typewriters having a carriage provided with a rack and an escapement including a click wheel, said device comprising a controlling rack bar having a geared connection with the carriage rack, a slotted adjusting slide normally immovable and disposed at right angles to said rack bar, a second rack bar paralleling and spaced from the adjusting slide, a gear engaging said last named rack bar, a clutch normally connecting the said gear with the click wheel, a slotted controlling arm inclined between the second rack bar and the said adjusting slide and pivotally connected to the former and having a movable connection in the slot of the latter, connections for adjusting the said slide to vary the inclination of the controlling arm, and a member carried by the controlling rack bar and movably disposed in the slot of the controlling arm.

2. A line justifying device for typewriters having a carriage provided with a rack and an escapement including a click wheel, said device comprising a controlling rack bar having a geared connection with the carriage rack, a slotted adjusting slide normally immovable and disposed at right angles to said rack bar, a second rack bar paralleling and spaced from the adjusting slide, a gear engaging said last named rack bar, a clutch normally connecting the said gear with the click wheel, a slotted controlling arm inclined between the second rack bar and the said adjusting slide and pivotally connected to the former and having a movable connection in the slot of the latter, connections for adjusting the said slide to vary the inclination of the controlling arm, a member carried by the controlling rack bar and movably disposed in the slot of said controlling arm, connections for manually shifting the said adjusting slide to vary the inclination of the controlling arm, a locking member normally securing said adjusting connections against operation, and manually actuated means for releasing said locking member.

3. A line justifying device for typewriters having a carriage provided with a rack and an escapement including a click wheel, said device comprising a controlling rack bar having a geared connection with the carriage rack, a slotted adjusting slide normally immovable and disposed at right angles to said rack bar, a second rack bar paralleling and spaced from the adjusting slide, a gear engaging said last named rack bar, a clutch normally connecting the said gear with the click wheel, a slotted controlling arm inclined between the second rack bar and the said adjusting slide and pivotally connected to the former and having a movable connection in the slot of the latter, connections for adjusting the said slide to vary the inclination of the controlling arm, a member carried by the controlling rack bar and movably disposed in the slot of said controlling arm, connections for manually shifting the said adjusting slide to vary the inclination of the controlling arm, a locking member normally securing said adjusting connections against operation, and manually actuated means for releasing said locking member, said lock releasing means also having connections for releasing the clutch and holding the click wheel and carriage against movement when the slide is released for adjustment.

4. A line justifying device for typewriters having a carriage provided with a rack and an escapement including a click wheel, said device comprising a controlling rack bar having a geared connection with the carriage rack, a slotted adjusting slide normally immovable and disposed at right angles to said rack bar, a second rack bar paralleling and spaced from the adjusting slide, a gear engaging said last named rack bar, a clutch normally connecting the said gear with the click wheel, a slotted controlling arm inclined between the second rack bar and the said adjusting slide and pivotally connected to the former and having a movable connection in the slot of the latter, connections for adjusting the said slide to vary the inclination of the controlling arm, a member carried by the controlling rack bar and movably disposed in the slot of said controlling arm, connections for manually shifting the said adjusting slide to vary the inclination of the controlling arm, a locking member normally securing said adjusting connections against operation, a rock shaft, manually controlled connections for actuating the rock shaft, releasing means for said locking member actuated by the rock shaft, carriage holding means movable into active position upon actuation of the rock shaft, and a clutch releasing arm mounted on and actuated by the rock shaft having a projecting finger for engaging and holding the click wheel when the clutch is released.

5. A line justifying device for typewriters having a carriage provided with a rack and an escapement including a click wheel, said device comprising a controlling rack bar having a geared connection with the carriage rack, a slotted adjusting slide normally immovable and disposed at right angles to said rack bar, a second rack bar paralleling and spaced from the adjusting slide, a gear engaging said last named rack bar, a clutch normally connecting the said gear with the click wheel, a slotted controlling arm inclined between the second rack bar and the said adjusting slide and pivotally connected to the former and having a

movable connection in the slot of the latter, connections for adjusting the said slide to vary the inclination of the controlling arm, a member carried by the controlling rack bar and movably disposed in the slot of said controlling arm, connections for manually shifting the said adjusting slide to vary the inclination of the controlling arm, a locking member normally securing said adjusting connections against operation, a rock shaft, manually controlled connections for actuating the rock shaft, releasing means for said locking member actuated by the rock shaft, carriage holding means movable into active position upon actuation of the rock shaft, and a clutch releasing arm mounted on and actuated by the rock shaft having a projecting finger for engaging and holding the click wheel when the clutch is released, said clutch actuating arm upstanding from the rock shaft and being in hinged parts, and a manual movable connection extending from the upper part of the clutch releasing arm to actuate the latter and release the clutch independent of movement of the rock shaft.

6. A line justifying device for typewriters having a carriage provided with a rack and having an escapement including a click wheel, said device including a controlling rack geared to the carriage rack, an inclined controlling arm bodily shiftable at right angles to the line of movement of the controlling rack and with which the said controlling rack has a movable controlling connection, means having a geared connection with the click wheel for controlling shifting movements of the controlling arm, and means for varying the inclination of said controlling arm whereby to regulate the extent of each effective movement of the controlling rack.

7. A line justifying device for typewriters having a carriage provided with a rack and having an escapement including a click wheel, said device including a controlling rack geared to the carriage rack, an inclined controlling arm bodily shiftable at right angles to the line of movement of the controlling rack and with which the said controlling rack has a movable controlling connection, means having a geared connection with the click wheel for controlling shifting movements of the controlling arm, and means for varying the inclination of said controlling arm whereby to regulate the extent of each effective movement of the controlling rack, said connection between the controlling arm and the click wheel including a clutch, and means to release said clutch whereby to permit the controlling rack to move independent of the escapement.

8. A line justifying device for typewriters having a carriage provided with a rack and having an escapement including a click wheel, said device including a controlling rack geared to the carriage rack, an inclined controlling arm bodily shiftable at right angles to the line of movement of the controlling rack and with which the said controlling rack has a movable controlling connection, means having a geared connection with the click wheel for controlling shifting movements of the controlling arm, and means for varying the inclination of said controlling arm whereby to regulate the extent of each effective movement of the controlling rack, said last named means including manually actuated and normally locked adjusting connections, means for releasing said connections for effective operation, a clutch in the click wheel connection, and means for disengaging the clutch simultaneous with the actuation of said releasing means.

9. A line justifying device for typewriters having a carriage provided with a rack and having an escapement including a click wheel, said device including a controlling rack geared to the carriage rack, an inclined controlling arm bodily shiftable at right angles to the line of movement of the controlling rack and with which the said controlling rack has a movable controlling connection, means having a geared connection with the click wheel for controlling shifting movements of the controlling arm, and means for varying the inclination of said controlling arm whereby to regulate the extent of each effective movement of the controlling rack, said last named means including manually actuated and normally locked adjusting connections, means for releasing said connections for effective operation, a clutch in the click wheel connection, means for disengaging the clutch actuated by the said releasing means, and other means for disengaging the clutch independent of the releasing means.

10. A line justifying device for typewriters having a carriage provided with a rack and having an escapement including a click wheel, said device including a controlling rack geared to the carriage rack, an inclined controlling arm bodily shiftable at right angles to the line of movement of the controlling rack and with which the said controlling rack has a movable controlling connection, means having a geared connection with the click wheel for controlling shifting movements of the controlling arm, and means for varying the inclination of said controlling arm whereby to regulate the extent of each effective movement of the controlling rack, said last named means including manually actuated and normally locked adjusting connections, means for releasing said connections for effective operation, a clutch in the click wheel connec-

tion, and means operable with the said releasing means for disengaging the clutch and at the same time holding the click wheel and the carriage against movement.

11. A line justifying device for typewriters having a carriage and an escapement, said device comprising connections between the escapement and the carriage including an inclined controlling arm bodily shiftable during normal operation, together with means for varying the inclination of said arm whereby to regulate the extent of movement of the carriage upon each movement of the escapement.

12. A line justifying device for typewriters having a carriage and an escapement, said device comprising connections between the escapement and the carriage including an inclined controlling arm bodily shiftable during normal operation, a normally locked adjusting member movable to vary the inclination of said controlling arm whereby to regulate the extent of each movement of the carriage upon movement of the escapement, and means for releasing and adjusting said member.

13. A line justifying device for typewriters having a carriage and an escapement, and adjustable means between the escapement and the carriage controlling the extent of each movement of the carriage at each actuation of the escapement including an inclined controlling member whose degree of inclination controls the extent of each operative movement of the carriage, and means for adjusting the inclination of said member.

14. A line justifying device for typewriters having a carriage and an escapement, including adjustable means between the escapement and the carriage controlling the extent of each movement of the carriage at each actuation of the escapement, means for adjusting the said first named means and means to lock the escapement and the carriage against movement during adjustment of said means.

KENNETH C. O'BRYAN.
JAMES WM. O'BRYAN.