A. A. DUBUQUE & P. H. VOIGT.

PUMP.

APPLICATION FILED NOV. 11, 1912.

1,068,487.

Patented July 29, 1913.

2 SHEETS—SHEET 1.

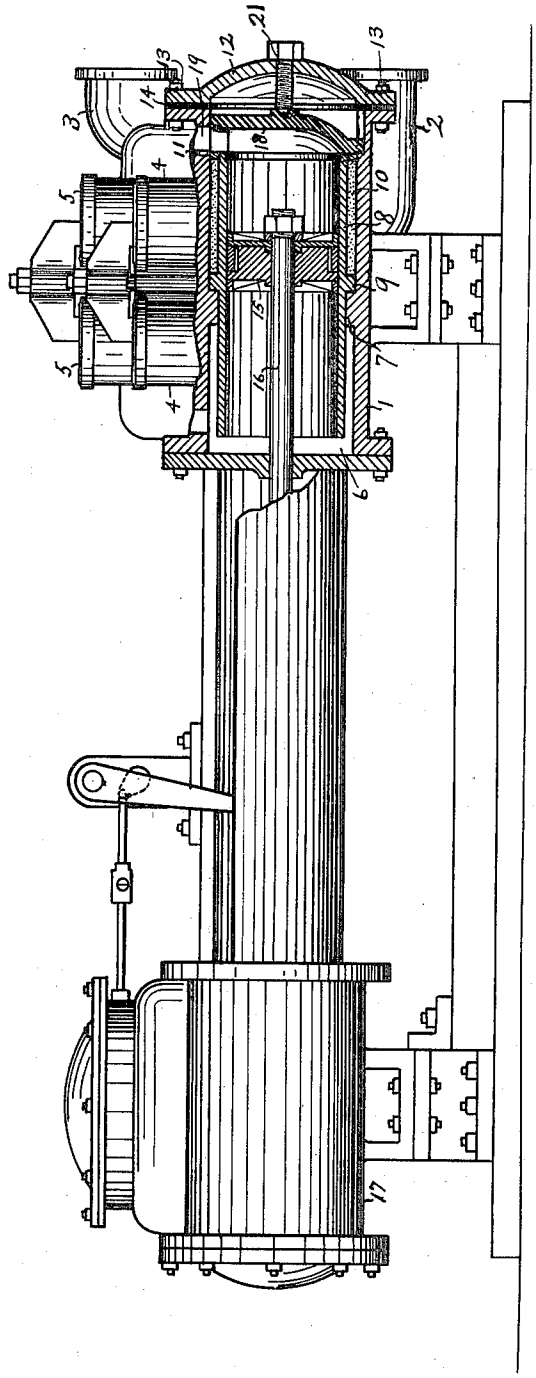

Fig. 1.

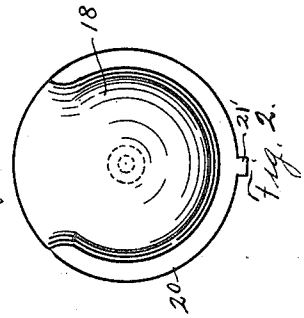

Fig. 2.

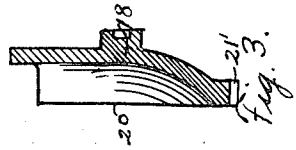

Fig. 3.

WITNESSES:

Baylor Hull

Mary Montgomery

INVENTORS

Arthur A. Dubuque.

Philip H. Voigt.

BY

Hardway & Cathey

ATTORNEYS

A. A. DUBUQUE & P. H. VOIGT.

PUMP.

APPLICATION FILED NOV. 11, 1912.

1,068,487.

Patented July 29, 1913.

2 SHEETS—SHEET 2.

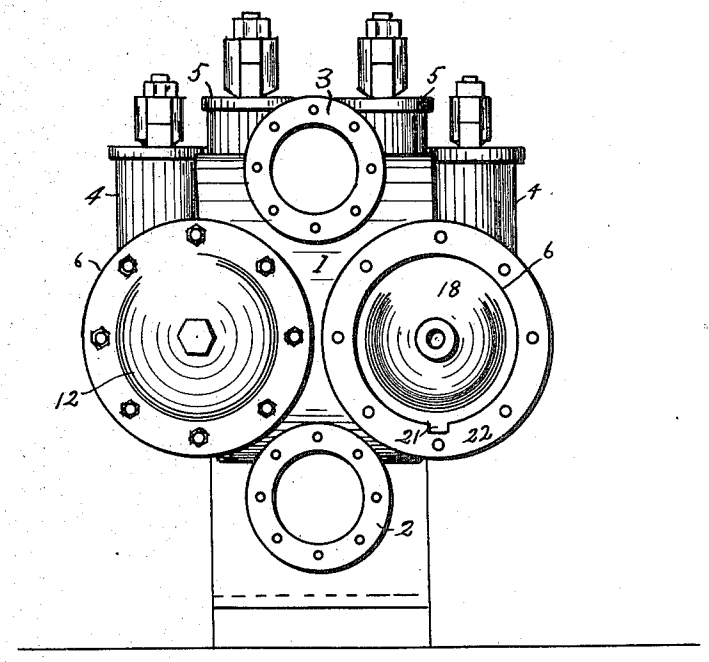

Fig. 4.

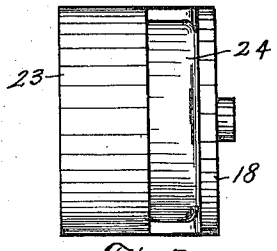

Fig. 5.

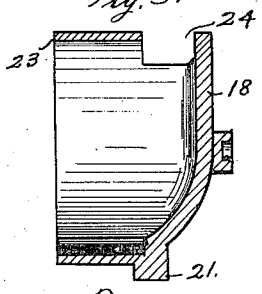

Fig. 6.

WITNESSES:
C. Baylor Hull
Mays Montgomery

INVENTORS
Arthur A. Dubuque
Philip H. Voight.
BY
Hardway & Cail.
ATTORNEYS.

UNITED STATES PATENT OFFICE.

ARTHUR A. DUBUQUE AND PHILIP H. VOIGT, OF HOUSTON, TEXAS.

PUMP.

1,068,487. Specification of Letters Patent. Patented July 29, 1913.

Application filed November 11, 1912. Serial No. 730,608.

To all whom it may concern:

Be it known that we, ARTHUR A. DUBUQUE and PHILIP H. VOIGT, citizens of the United States, residing at Houston, in the county of Harris and State of Texas, have invented certain new and useful Improvements in Pumps, of which the following is a specification.

Our invention relates to new and useful improvements in pumps.

The invention consists in the provision of a disk-like deflector arranged within the head of the water box of the ordinary pump which is used in forcing water into the ordinary oil or water well.

The object of the invention resides in the provision of a deflector in a pump of the character described which will rest against the pump liner and hold the same in place and which will at the same time protect the head of the water box against the direct force of the fluid pressure and will thereby prevent leakage of fluid around the said head and will also direct the fluid in the proper direction and thus prevent the unnecessary loss of any fluid pressure.

With the above and other objects in view, the invention has particular relation to certain novel features of construction, and arrangement, an example of which is given in this specification and illustrated in the accompanying drawings, wherein—

Figure 1 is a side elevation of a pump, shown partially in section. Fig. 2 is a plan view of the deflector which is arranged within the head of the water box. Fig. 3 is a sectional edge view thereof. Fig. 4 is an end view of the water box with one of the heads removed. Fig. 5 is a plan view of a modified form of deflector, and Fig. 6 is a sectional side elevation thereof.

Referring now more particularly to the drawings, the numeral 1 refers to the water box of the pump which is provided with a suitable inlet 2 and outlet 3. The valve casings are indicated by the numerals 4, 4 and 5, 5. The water box includes two cylindrical chambers, as 6, 6, arranged side by side. Each chamber 6 has an annular rib 7 extending around the inner wall thereof and near the longitudinal center thereof. Within each chamber 6 is a cylindrical liner 8 having an annular rib 9 around the periphery thereof, the rib 9 resting against the rib 7 and preventing the movement of the liner in one direction. A space is thus provided around the liner. This space around one end of said liner is filled with packing 10 which rests against the rib 9 of the liner and is held in place by means of a metallic ring 11 which surrounds the end of the liner and rests against said packing. A head 12 is secured over the end of each chamber 6 by means of suitable bolts 13 and between said head and water box is a packing 14 which is provided to make the water box water tight. Within the liner 8, the ordinary piston 15 reciprocates, being driven by the piston rod 16 which in turn is driven back and forth by the engine 17.

The construction hereinbefore described is that of the ordinary and well known pump and no protection is sought thereon, the invention consisting of the improvement hereinafter to be set forth.

The numeral 18 refers to a concave, disk-like metallic plate, of such a size as to fit snugly within the end of the chamber 6 and whose rim rests against the ring 11 and holds the same firmly in place against the packing 10. The rim of the upper portion of the plate 18 has been flattened and thus does not contact with the liner and a passageway is thus provided for the fluid to pass from the liner 8 through the passageway 19 and thence through the upper portion of the water box of the discharge 3. One side of the plate 18 being flattened leaves a flat U-shaped rim 20 which rests against the ring 11 and the lower portion and sides of the end of the liner 8. A set bolt 21 is threaded through the central portion of the head 12 and its inner end rests against the plate 18 and holds the same firmly against the ring 11 and the end of the liner 8 and thus holds said ring and liner firmly in position and also secures the packing 10 in place. As the piston 15 is driven forward, the fluid is forced against the concaved side of the plate 18 and by it is deflected directly through the passageway 19. Were it not for the plate 18, the head 12 would receive the full force of the impulse delivered from the piston and the packing 14 would be displaced, thereby causing a leak.

It is the object of the plate 18 to hold the liner 8, the packing 10 and the packing ring 11 in position, as well as to direct the fluid pressure and thus minimize the loss thereof. The plate 18 is provided with a portion 21′ which fits into a corresponding groove 22 in

the wall of the chamber 6 and the plate is thus held in position and prevented from turning.

Figs. 5 and 6 show a modified form of the invention. This form consists of the plate 18 in which the rim 20 is extended and formed into a cylindrical ring 23. In case this modified form is used, the packing ring 11 may be dispensed with, inasmuch as said cylindrical ring 23 takes the place thereof, the modified method consisting in making said ring 11 integral with the plate 18. The upper side of ring 23 is partially cut away, forming an opening 24 through which the fluid is discharged into the passageway 19.

What we claim is:—

1. In a pump of the character described, a water box and a cylindrical liner therein, a head secured over one end of said water box, a disk-like plate within said head and resting against said liner, one side of which is spaced from the liner so as to allow a fluid passageway between said plate and liner.

2. In a device of the character described, the combination with a cylindrical water box, of a cylindrical liner secured therein, a head secured over one end of said water box, a concaved plate within said head, and partially closing one end of said liner, one side of said plate being spaced from the liner to allow a fluid passageway between said plate and liner.

3. A pump of the character described having a cylindrical chamber with a shoulder around the inner wall thereof, a cylindrical liner having an annular rib around the periphery thereof, said rib of said liner resting against the shoulder of said chamber, a head secured over one end of said chamber, a concaved, disk-like plate arranged at the end of the liner, one edge of said plate being spaced from the liner to provide a fluid passageway between said plate and liner end and an adjustable means carried by the head and resting against said plate and holding the same in position against said liner.

4. In a pump, a liner and a concaved, disk-like plate partially closing one end thereof and having one side thereof spaced from the liner.

5. In a pump, a liner, a concaved disk-like plate, a rim extending around the edge thereof which is elevated above the surface of the plate and having one side of said rim cut away, said plate being arranged at the end of the liner so as to partially close the end thereof.

6. In a pump of the character described, a water box and a liner therein, a head secured over one end of said water box, a plate within said head and arranged to partially close one end of the liner, one side of said plate being spaced from the liner so as to allow a fluid passageway between said plate and liner.

In testimony whereof we have signed our names to this specification in the presence of two subscribing witnesses.

ARTHUR A. DUBUQUE.
PHILIP H. VOIGT.

Witnesses:
A. C. SPRINGFIELD,
P. C. ROBERTS.