Jan. 5, 1965 A. J. SCHMITT ETAL 3,164,492

SYSTEM AND APPARATUS FOR TRUEING DOCTOR BLADE HOLDERS ON DOCTOR BACKS

Filed Sept. 22, 1961 2 Sheets-Sheet 1

Fig. 1

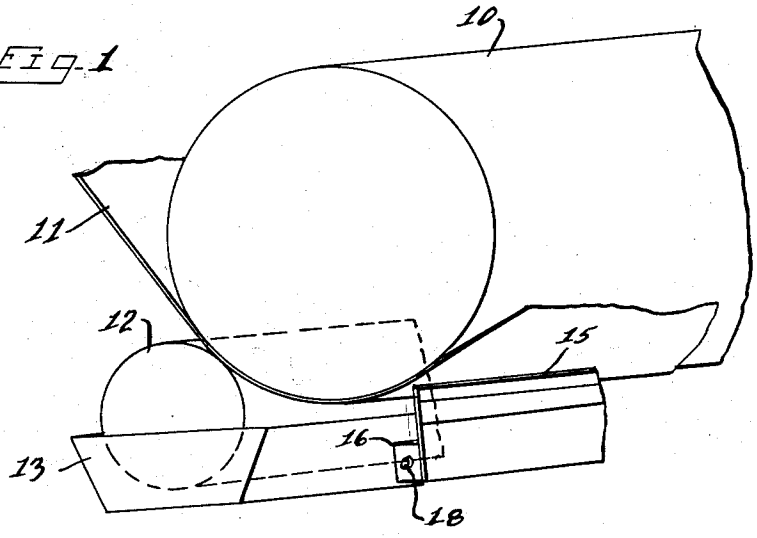

Fig. 4

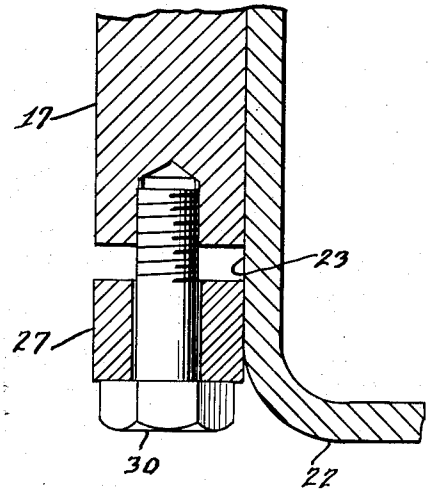

Fig. 5

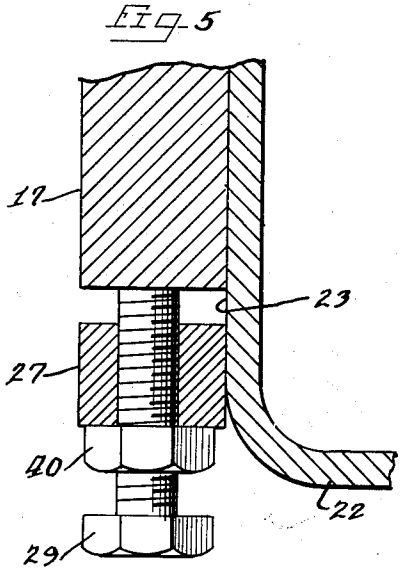

INVENTORS
Arnold J. Schmitt
BY Irving J. Phillips
Hill, Sherman, Meroni, Gross & Simpson
ATTORNEYS

Jan. 5, 1965 A. J. SCHMITT ETAL 3,164,492

SYSTEM AND APPARATUS FOR TRUEING DOCTOR BLADE HOLDERS ON DOCTOR BACKS

Filed Sept. 22, 1961 2 Sheets-Sheet 2

Fig. 2

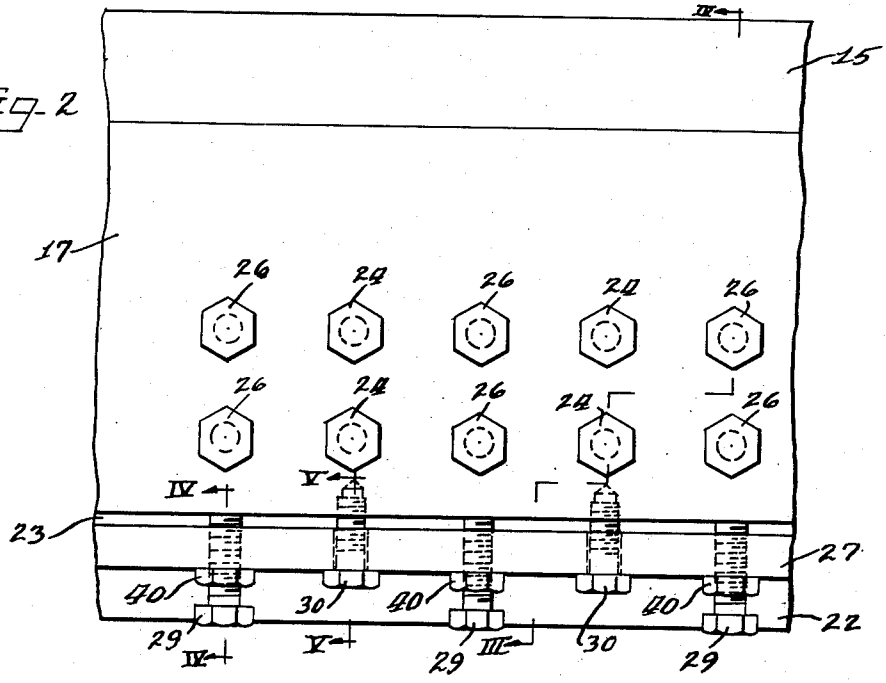

Fig. 3

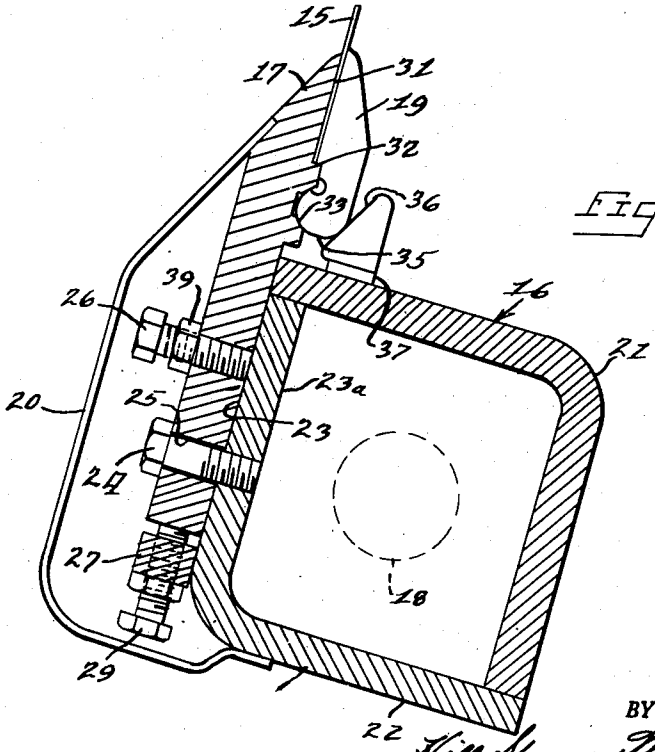

INVENTORS
Arnold J. Schmitt
BY Irving J. Phillips
Hill, Sherman, Meroni, Gross & Simpson
ATTORNEYS

United States Patent Office 3,164,492 Patented Jan. 5, 1965

3,164,492

SYSTEM AND APPARATUS FOR TRUEING DOCTOR BLADE HOLDERS ON DOCTOR BACKS

Arnold J. Schmitt, Beloit, Wis., and Irving J. Phillips, South Beloit, Ill., assignors to Beloit Iron Works, Beloit, Wis., a corporation of Wisconsin

Filed Sept. 22, 1961, Ser. No. 139,939
8 Claims. (Cl. 118—100)

This invention relates to improvements in doctor backs and more particularly relates to a simplified and improved method and apparatus for mounting and aligning doctor blade holders on doctor backs.

In coacting machines for paper webs, the coating material is picked up and applied to the web as it travels beneath the backup roll by a coating roll, and the layer of coating is maintained at a uniform thickness across a width of the web by a doctor blade. In order that the coat be uniform, the doctor blade must be straight and true and parallel with the face of the backup roll.

The doctor back, blade holder for the doctor blade and doctor blade are relatively long being 20 feet in length or longer and the doctor back itself is at least one foot in cross-section, and is subject to considerable warpage during machining, and the doctor back when mounted on its trunnions is also subject to sagging, with the result that the blade holder when mounted on the doctor back tends to conform to the form of the doctor back.

Heretofore provisions have been made on the coating machine to align the doctor assembly and true the blade engaging surfaces of the blade holder after the doctor assembly has been mounted on the coating machine. This is a difficult, time consuming and expensive operation.

In carrying out our invention, the trueness of the doctor blade is attained by mounting the doctor back on a planar or a like true surface, with the doctor blade holder bolted to the doctor back. A dial indicator is then passed along the generally horizontal and vertical blade engaging faces of the blade holder to determine variations from straightness and alignment of these generally vertical and horizontally faces. The variations from straightness of the generally vertical and horizontal faces are then corrected by jacking the blade holder with respect to the doctor back in horizontal and vertical planes until the generally horizontal and vertical blade engaging faces of the blade holder are true.

A principal object of the present invention is to provide a simple and novel method and apparatus for trueing the blade engaging faces of a doctor blade holder before the doctor assembly is installed on a machine.

A further object of the invention is to true the blade engaging faces of a doctor blade holder while mounted on the doctor back and prior to mounting of the doctor assembly on a machine, by jacking the blade holder with respect to the doctor back both vertically and horizontally.

Still a further object of the invention is to provide a simplified method for trueing the blade engaging faces of a doctor blade holder by jacking the doctor blade holder with respect to the supporting doctor back therefor.

Still another and important object of the invention is to provide a novel and simple arrangement for trueing the blade engaging faces of a doctor blade holder both vertically and horizontally by the use of jacking screws cooperating with hold-down screws for moving the blade holder toward and from the doctor back, and by the use of other jacking screws mounted on the doctor back and operable to jack the blade holder along the supporting face of the doctor back.

These and other objects of the invention will appear from time to time as the following specification proceeds

and with reference to the accompanying drawings wherein:

FIGURE 1 is a diagrammatic view diagrammatically showing a coating applicator for a web of paper including a doctor back for maintaining the thickness of the coating uniform throughout the width of the web;

FIGURE 2 is a view in side elevation of a doctor back constructed in accordance with the invention, looking toward the blade holder, with the cover therefor removed;

FIGURE 3 is a transverse sectional view taken through a doctor back constructed in accordance with the invention substantially along lines III—III of FIGURE 2;

FIGURE 4 is an enlarged fragmentary sectional view taken substantially along line IV—IV of FIGURE 3; and

FIGURE 5 is an enlarged fragmentary sectional view taken substantially along line V—V of FIGURE 3.

In the embodiment of the invention illustrated in the drawings, we have diagrammatically shown in FIGURE 1 a coating machine for coating a web of paper and generally consisting in a backup roll **10**, backing up a web of paper **11** trained therebeneath and between said backup roll and a coating roll **12**. The coating roll **12** rotates in a trough **13** filled with coating material and picks up the coating material from the trough and applies the coating material to the outer surface of the web.

A doctor blade **15** is shown as mounted on a doctor back **16** for maintaining the coating on the web uniform in thickness throughout the width of the web. The backup roll **10**, doctor back **16** and doctor blade **15** may be 20 feet in length and longer, and the edge of the doctor blade must be straight and true and parallel to the face of the backup roll **10** and the web trained thereunder in order to assure a coating layer uniform in thickness throughout the entire area of the web.

The doctor assembly consists generally in a doctor back **16**, a blade holder **17** secured to the advance face of the doctor back and extending upwardly therefrom, a clamping bar **19** clamping the blade **15** to the blade holder **17** and a cover **20** covering the advance face of the blade holder.

The doctor back **16** is supported at its opposite ends on trunnions **18** for movement about an axis extending longitudinally of the doctor back **16**, and is held in position and adjustably moved about said trunnions to bring the doctor blade **15** to the required spacing with respect to the backup roll **10** and web **11** trained thereunder, by suitable adjusting mechanism, which may be of various well known forms, and no part of the present invention so not herein be shown or described further.

The doctor back **16**, as shown in FIGURE 3, is hollow and generally rectangular in cross-section and consists in two facing right angled members **21** and **22**, abutting at the ends of the legs of the angles and welded or otherwise secured together. The right angled member **22** has an upright advance face **23**, along which extends the blade holder **17**.

The blade holder **17** is mounted on the doctor back **16** by a series of holddown bolts or cap screws **24**, extending through the face **23** of the right angled member **22** and threaded in the upright leg **23***a* thereof. As shown in FIGURE 3, clearance is provided between the cap screws **24** and holes **25** in the blade holder **17**, through which said cap screws extend. The cap screws **24** are shown in FIGURE 2 as being arranged in rows of two, and may be spaced along the blade holder **17** for substantially the length thereof.

Between the holddown screws **24** and in alignment therewith, are a series of rows of jacking screws **26**, threaded in the blade holder **17** and having jacking engagement with the face **23** of the upright leg **23***a* of the right angled member **22**.

Extending along the face 23 of the upright leg of the right angled member 22, beneath the blade holder 17 is a bar 27, welded or otherwise secured to said upright face adjacent the lower end portion thereof and having a series of alternately arranged jacking screws 29 and 30 having jacking engagement with a bottom edge of the blade holder 17. As shown in FIGURES 2, 4 and 5, the jacking screws 29 are threaded in the bar 27 from the bottom thereof, and having jacking engagement with the bottom edge of the blade holder 17, while the alternate jacking screws 30 are freely mounted in the bar 27 and are threaded in the blade holder 17 from the bottom edge thereof. The jacking screws 29 thus exert a pushing action on the blade holder 17 while the jacking screws 30 pull on said blade holder. In other words, the jacking screws 29 and 30 apply first and second forces at spaced intervals along the holder in a first plane which is parallel to the face 31 of the blade holder 17. These first and second forces are applied in opposing directions and are positive non-yielding forces so that the holder can be shaped or bent in a positive formation thereby applying a positive shape to the face 32 which is in engagement with the edge of the blade 15. The holddown screws 24 and jacking screws 26 apply third and fourth forces at spaced intervals along the holder 17 in a second plane which is substantially normal to the plane of the blade, and these forces are each non-yieldingly positively applied so that the holder is positively bent or shaped and the surface 31 of the holder engaging the flat surface of the blade positively shapes the blade. The combination of forces obtains uniform blade pressure along its entire length and the application of each of the forces may be referred to as a force pattern with the force pattern being positive and maintained to maintain a positive bend on the holder.

The blade holder 17 has a rear face 31 engaged by the blade 17, which must be true throughout the length thereof in order that the doctor blade 15 will retain its trueness when clamped to said face by the clamping bar 19. The rear or vertically extending face 31 terminates at its lower end portion into a shoulder 32 supporting the doctor blade 15. This shoulder must also be straight and true to retain the trueness of the doctor blade 15. Beneath the shoulder 32 is a socket 33 slidingly engaged by an arcuate lower end portion 35 of the clamping bar 19. The opposite side of the concave lower end portion 35 of clamping bar 19 slidably engages an inclined face 36 of an abutment 37, extending upwardly of the horizontal leg of the right angle section 21, and with the concave portion 33 of the blade holder 17, forming an arcuate socket for the clamping bar 19 accommodating said clamping bar to be swung away from the blade 15 when it is desired to clean or renew said blade. The clamping bar 19 may clamp the blade 15 to the blade holder 17 in a conventional manner, which need not herein be shown or described, since it is no part of the present invention.

In trueing the blade holder 17, the doctor back is mounted on its trunnions on a planar bed, or other true surface. When the blade holder 17 is mounted on the doctor back by the cap screws 24, a dial indicator (not shown) is passed along the faces 31 and 32 of said blade holder and any variation in straightness of these faces is marked.

Any variation in straightness of the face 31 may be corrected by turning selected jacking screws 26 in a clockwise direction to tend to push the blade holder away from the doctor back, or by turning the holddown screws 24 in a clockwise direction to tend to pull the blade holder 17 toward the doctor back. The jacking screws 26 and holddown screws 24 may thus be tightened or loosened until the dial indicator shows the face 31 to be true. Lock nuts 39 on the jacking screws 26 may then be tightened to hold said jacking screws in position.

In trueing the face 32 the jacking screws 29 may be turned in a clockwise direction, to push on the bottom surface of the blade holder 17, and may be locked in position by lock nuts 40. The jacking screws 30 may be turned in a clockwise direction to pull on the blade holder 17. The jacking screws 29 and 30 may be turned where required, until the dial indicator indicates that the face 32 is true.

The cover 20 may then be placed into engagement with the front face of the blade holder 17 and the bottom surface of the right angled member 22 and retained to said blade bottom and member to prevent tampering with the screws 24, 26, 29 and 30. The blade 15 may then be clamped into engagement with the trued faces 31 and 32 of the blade holder 17. The doctor back assembly may then be mounted on its mountings (not shown) on the coating machine, and adjusted to provide the proper spacing between the doctor blade 15 and the web 11.

It may be seen from the foregoing that a simple and improved method has been provided for accurately adjusting the doctor blade engaging surfaces of a doctor blade holder, to compensate for warpage, inaccuracies in machining and sagging of the doctor back, and that the blade holder may be more or less permanently mounted on and trued with respect to the doctor back, prior to assembling the doctor assembly to the coating machine, and that the trueness of the blade engaging surfaces of the blade holder once being established, may be maintained for practically the life of the machine.

It should here be noted that by the apparatus and system herein described, the blade engaging faces of the blade holder may be adjusted for straightness up to one ten thousandth of an inch.

It may further be seen that while the system for trueing the blade engaging surfaces of the doctor blade holder is herein described for doctors used on coating machines, the system may also be used for paper machine doctors, drying doctors and calender doctors.

While we have herein shown and described one form in which our invention may be embodied, it should be understood that various modifications and variations in invention may be attained without departing from the spirit and scope of the novel concepts thereof, as defined by the claims appended hereto.

We claim as our invention:

1. In a doctor back assembly, a doctor back, a doctor blade holder extending along said doctor back and having two intersecting blade engaging surfaces, means securing said doctor blade holder to said doctor back, first jacking means extending along said doctor blade holder and having jacking engagement with said doctor back for trueing one of said blade engaging faces, second jacking means extending along said doctor back and having jacking engagement with said blade holder, said securing means alternating with said first jacking means to effect pulling said doctor blade holder toward said doctor back by said securing means and pushing said doctor blade holder from said doctor back by said jacking means and said second jacking means being alternately operable to push and pull said doctor back to straighten the other intersecting face thereof.

2. In a doctor back assembly, a doctor back, a doctor blade holder extending along said doctor back and having two intersecting blade engaging faces, holding screws extending through said blade holder and threaded in said doctor back for securing said blade holder to said doctor back, jacking screws arranged alternately of said holding screws and threaded in said blade holder and having jacking engagement with said doctor back and operating with said holding screws to jack said blade holder toward and from said doctor back along the length thereof, to true one of said blade engaging faces, other jacking screws extending in planes generally perpendicular to the planes of said first mentioned jacking screws and mounted on said doctor back and alternately having jacking and pulling

engagement with said blade holder, for trueing the other of said blade engaging faces.

3. In a doctor back assembly, a doctor back, a doctor blade holder extending along said doctor back and having two intersecting blade engaging surfaces, a plurality of pairs of machine screws extending through said blade holder and threaded in said doctor back and arranged in parallel rows along said blade holder and doctor back, a plurality of pairs of jacking screws arranged between said pairs of machine screws in alignment therewith and threaded in said blade holder and having jacking engagement with said doctor back, said machine screws and said jacking screws being alternately operable to draw said blade holder toward said doctor back and force said blade holder away from said doctor back to true one of said blade engaging faces, a bar extending along the lower end portion of said doctor back and secured thereto and spaced from and facing a lower edge of said blade holder, and alternately arranged jacking screws threaded in said bar and having jacking engagement with said blade holder and extending through said bar and having threaded engagement with said blade holder, to draw said blade holder toward said bar and force said blade holder from said bar, and thereby true the other of said intersecting faces.

4. In a doctor back assembly, a doctor back, a doctor blade holder extending along said doctor back, said doctor blade holder having first and second intersecting blade engaging surfaces substantially normal lying in first and second planes, first jacking means extending along said blade holder and having jacking engagement between said doctor back and said holder applying positive nonpielding forces in said plane for trueing said blade engaging faces, and second jacking means extending along said doctor back and applying positive non-yielding forces in said second plane between said blade holder and said back for trueing the other of said blade engaging faces, each of said jacking means applying forces in either direction in its plane and being variably adjustable along the length of the blade holder.

5. In a doctor back assembly, a doctor back, a doctor blade holder extending along said doctor back and having first and second intersecting blade engaging faces, means securing said doctor blade holder to said doctor back, first and second jacking screws acting in said first plane between said doctor blade holder and said doctor back along the length thereof with said first screws applying a pushing force and said second screws applying a pulling force to the holder for trueing one of said blade engaging faces, third and fourth jacking screws acting in said second plane between said doctor back and said holder along the length thereof with said third screws applying a pushing force and said fourth screws applying a pulling force for trueing the other blade engaging face of said blade holder.

6. The method of adjusting a doctor blade supported on a blade holder to have uniform pressure for use with a given roll in a particular position of use comprising, applying to the holder a plurality of first and second forces at spaced intervals along the holder in a first plane substantially parallel to the plane of the blade, said first forces being applied in a direction toward the blade and said second forces directed away from the blade

and positively bending the holder parallel to the plane of the blade, applying to the holder a plurality of third and fourth forces at spaced intervals along the holder in a second plane substantially normal to the plane of the blade, said third and fourth forces being applied in opposing directions and positively bending the holder normal to the plane of the blade, obtaining uniform blade pressure along its entire length, said forces applying a distributed holder bending force pattern to the holder, and substantially maintaining said distributed force pattern and maintaining the bend of the holder during operation of the blade regardless of forces between the blade and the roll.

7. The method of adjusting a doctor blade supported on a blade holder mounted on a doctor back to have uniform blade pressure for use with a given roll in a particular position of use comprising, applying a distributed non-yielding force pattern along the holder with first and second force applying means applying forces at longitudinally spaced locations between the back and holder acting in a first plane substantially parallel to the plane of the blade and applying non-yielding forces in opposing directions to positively bend the holder to a desired configuration, applying a distributed non-yielding force pattern along the holder with third and fourth force applying means applying non-yielding forces between the back and holder acting in a second plane normal to the plane of the blade in opposing directions to positively bend the holder to a desired configuration, varying said forces until said distributed force pattern bends the holder to obtain uniform blade pressure along the entire length of the blade, and substantially maintaining said shape of the holder due to the distributed force pattern with uniform blade pressure during operation of the blade.

8. A doctor assembly comprising, a doctor back, a doctor blade holder extending along said doctor back, said doctor blade holder having two-blade engaging surfaces in intersecting planes, first and second force applying means along the back for applying forces to the holder substantially in the first of said planes, said first and second means respectively applying positive non-yielding forces in opposing directions, and third and fourth force applying means along the back for applying forces along the holder substantially in the second of said planes, said third and fourth means respectively applying positive non-yielding forces in opposing directions, so that a distributed force pattern is applied along the holder in both of said planes and a positive desired bend of the holder is provided and uniform blade pressure is obtained along the length of the blade supported in said holder.

References Cited in the file of this patent

UNITED STATES PATENTS

812,078	Norton	Feb. 6, 1906
2,145,550	Loose	Jan. 31, 1939
2,273,021	Cox	Feb. 17, 1942
2,607,377	Merritt	Aug. 19, 1952

FOREIGN PATENTS

1,158,166	France	Jan. 20, 1958