Feb. 19, 1952 P. M. NEJEDLY ET AL 2,586,697

BOWLING PIN SPOTTING MECHANISM

Filed Nov. 27, 1945

FIG. 1

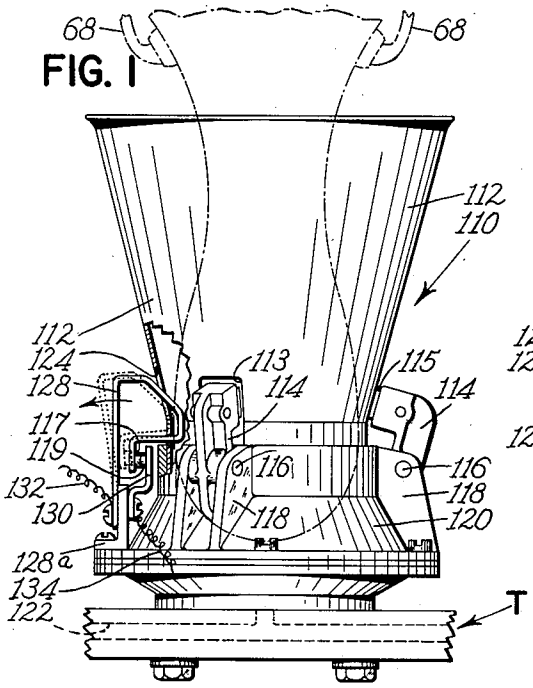

FIG. 2

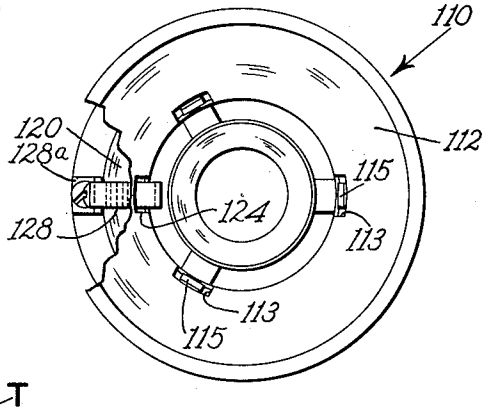

FIG. 3

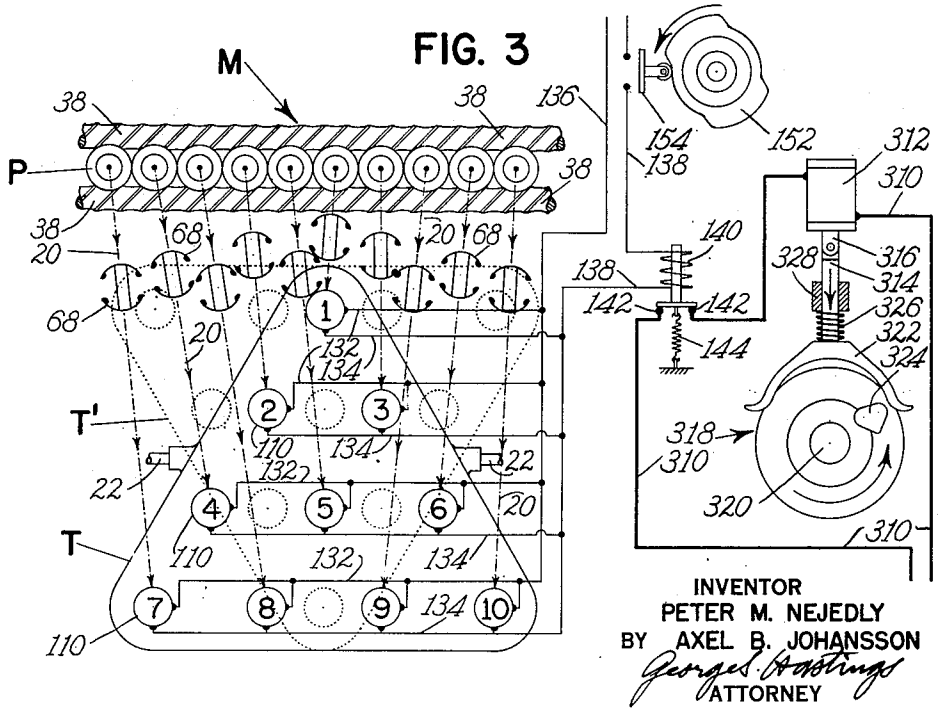

INVENTOR
PETER M. NEJEDLY
BY AXEL B. JOHANSSON
Georges Hastings
ATTORNEY

Patented Feb. 19, 1952

2,586,697

UNITED STATES PATENT OFFICE

2,586,697

BOWLING PIN SPOTTING MECHANISM

Peter M. Nejedly and Axel B. Johansson, Brooklyn, N. Y., assignors to American Machine and Foundry Company, a corporation of New Jersey

Application November 27, 1945, Serial No. 631,094

3 Claims. (Cl. 273—43)

1

This invention relates to bowling pin setting machines and especially to improvements in pin spotters employed in such machines, and mechanism for insuring that at all times during the operation of the machine full sets of pins will be spotted in proper playing position on a bowling alley.

The invention relates chiefly to improved pin spotters and safety mechanism associated therewith, and finds particular use in a bowling pin setting machine of the general type described in Rundell patent, No. 2,388,707, issued November 13, 1945, for Bowling Pin Setter, although its use is not so limited and it may find application in other types of bowling pin setting machines.

In a bowling pin setting machine of the type shown in the above referred to patent, bowling pins removed from the pit of an alley are conveyed to a pin assembling station such as a magazine by suitable conveying mechanism operating in timed relation with the other coordinated units of the machine.

When a new set of pins is required on a bowling alley during the course of play, a transfer device provided with pin gripping units, usually ten are suitable for conveying the number of pins for playing from the magazine, is actuated to remove a full set of pins from the magazine and deliver them into the spotters of the pin setter.

In the machine mentioned for purposes of illustration, the spotters are mounted in conventional triangular pin playing arrangement on a spotter table which is moved to and from the playing bed of an alley. After the delivery of ten pins to the ten spotters, the table is turned to locate the pins held by the spotters in upright playing arrangement ready to be spotted on the alley. The pins are held in the spotters by suction operated grippers forming a part of each of the spotters and when the table is moved into pin spotting position adjacent the alley, the pins are released from the spotters and deposited in playing arrangement on the alley. The table is then moved upwardly away from the alley and turned back into pin receiving position relative to the pin transfer which conveys sets of pins from the magazine to the spotters.

One of the problems incident to the proper operation of a bowling pin setting machine and especially the type mentioned is that of insuring that full sets of pins will always be delivered to the spotters and from the spotters to the playing surface of the bowling alley in proper on-spot playing arrangement.

If the spotters are operating perfectly, there

2

is little or no danger that new pins will not be gripped and held thereby upon delivery by the transfer units thereinto both at the time they are placed in the spotters and during their subsequent handling by the spotters until they are placed on the alley. However, due to use and resulting wear and tear because of play, pins become worn and their handle and butt ends become dented, chipped and split. Although such use does not necessarily render pins unfit for play unless they are actually broken, it does raise the problems of insuring that full sets of pins will be removed by the transfer units from the magazine and conveyed thereby to the spotters and also that all pins delivered to the spotters will remain held therein until the pins are actually placed on the alley.

If for any reason a full set of pins is not removed by the transfer units from the magazine, it is obvious that a full set of pins cannot be placed in the spotters. If a full set of pins is removed by the transfer units from the magazine and placed in the spotters and one or more of the latter do not function properly, such pins will be removed by the transfer units and reconveyed thereby back towards the magazine. When this condition prevails, the machine cannot function properly because when the table is turned the latter will strike any pins held in the transfer units and may cause breakage or damage to the transfer units or table or both which will result in loss of time and shut down of the machine.

According to our invention, we have provided means for solving these problems and overcoming the accompanying disadvantages by providing mechanism which detects the absence of a pin from a spotter if for any reason a pin is not delivered thereinto or if a pin is removed therefrom by a pin transfer unit and if a pin or pins drops from a spotter or spotters when the table is turned or as it moves downwardly into pin setting position relative to the alley. Under such conditions the machine is stopped before any damage can be caused and corrections, such as supplying missing pins to empty spotters, can be made so that a full set of pins will be set on the alley and play of the game continued without undue loss of time.

It is an object of our invention, therefore, to provide means for insuring that full sets of pins are at all times placed upon the playing part of a bowling alley during the operation of an automatic bowling pin setting machine.

It is also an object of our invention to pro-

vide safety detecting mechanisms for insuring that full sets of pins will be set upon the playing bed of a bowling alley during the operation of bowling pin setting machines of which this mechanism forms a part.

It is an added object of our invention to provide each spotter of the plurality of spotters carried by pin setting mechanism, usually ten spotters, with means for stopping the operation of the bowling pin setting machine if less than a full set of pins is placed in or carried by the spotters or if a pin is removed from a spotter during the operation of the setting mechanism in placing pins on the playing bed of a bowling alley.

It is a further object of our invention to provide each spotter of the plurality of spotters carried by the setter table, usually ten, with a detecting device which when for any reason a pin is missing from a spotter effects a stoppage of the machine in order to prevent breakage of parts and allow discrepancies in the number of pins placed on the alley to be adjusted.

It is an additional object of our invention to provide each of the pin spotters of the pin setting mechanism with detectors which function to stop the machine if less than a full set of pins is carried by the several spotters on the table.

It is an additional object of our invention to provide each of the pin spotters of the pin setting mechanism with detectors and associated control means which are operative, if a pin or pins is or are not delivered to the spotters or a pin or pins drops from the spotters because of faulty spotter operation, to stop the operation of the machine.

With these and other objects not specifically mentioned in view, the invention consists in certain combinations and constructions which will be hereinafter fully described, and then set forth in the claims hereunto appended.

In the accompanying drawings which illustrate a preferred embodiment of the invention and form a part of this specification, and in which like characters of reference indicate the same or like parts:

Figure 1 is a side elevation partly in section, showing a preferred embodiment of our invention;

Figure 2 is a plan view of Figure 1; and

Figure 3 is a diagrammatic plan view of the pin setter table showing the path of the pins from the storage chamber to the cups of the transfer member, the final positions of the pins for depositing the same on the alley after reversing the pin setter table, and a suitable electric circuit, and associated control means operative to stop the machine if less than a full set of pins is carried by the pin spotters on the table.

Referring to the drawings, which show a preferred embodiment of the invention, all pins P in the pit of an alley (not shown) are removed therefrom and conveyed by suitable mechanism (not shown) which may be similar in construction and operation to that shown in the above referred to Rundell patent into a storage magazine M which includes two spaced elongated spiral supporting and conveying members **38** (Figure 3) which assemble the required number of pins, usually ten. After the desired number of pins have been assembled in the magazine and when a new set of pins is desired to be transferred to the pin setter mechanism, a plurality of grippers **68** forming a part of the ten pin

transfer units of the pin transfer mechanism (not shown) are moved downwardly into engagement with the butt ends of pins located between the spirals **38** and into gripping relationship therewith so that upon upward movement of the gripper units away from the magazine M, ten pins are carried thereby for delivery into spotters, designated generally **110** (Figure 1). As shown diagrammatically in Figure 3, there are ten spotters occupying pin positions 1–10. The several spotters are mounted upon a table T supported on trunnions **22** for delivering movement to transfer the pins from full line position (shown in Figure 3) to dotted line position T'. Pins removed from magazine M are conveyed along broken line paths **20** to the several spotters 1–10.

The several pin spotters **110** are identical in construction and only one need be described in detail. Each of the spotters **110**, which is one of the series of ten, or any other suitable number, is mounted on table T in a predetermined position in a triangular playing arrangement. Each spotter is provided with pin handling grippers **114** pivotally mounted at **116** on brackets **118** forming a part of cup housing **120**. The pin engaging surface **115** of each of the gripper jaws **114** projects through an opening **113** formed in the conical cup portion **112** constituting the pin guiding portion of the spotter.

Each spotter is provided with three grippers **114** located substantially 120° apart (as shown in Figure 2) although additional grippers **114** could be provided if desired. Grippers **114** are operated by fluid actuated mechanism (not shown) similar in construction and operation to that shown and described in Rundell patent, No. 2,310,996. As in the Rundell patent, suction is employed for operating the grippers. A suction conduit **122** connected to a suitable source of supply and controlled by a cam operated valve (not shown) is connected to each of the ten spotters and controlled at proper times to cause grippers **114** to grip and hold and then release the handle ends of pins delivered thereto by grippers **68**.

A suction control cam **152** is operative to close a switch **154** which actuates the above referred to valve (not shown). This operation creates gripper operating suction in each spotter at the time a pin is delivered thereto by transfer **68** whereby grippers **114** hold a pin therein when grippers **68** are pulled clear of a pin in a spotter, at the time the table turns to locate the pins in dotted position T' (as shown in Figure 3), and also during the time the table is moving downwardly to locate the pins in position on the bowling alley. When the pins held by grippers **114** are spotted on the alley, the suction valve (not shown) is closed which breaks the suction and grippers **114** release pins held in the spotters. Table T then rises, turns and moves upwardly to pin receiving position above the alley.

As mentioned hereinabove, if for any reason (1) a pin is not delivered to a spotter or the pin transfer units do not remove a full set of pins from the magazine, or an imperfect pin falls from a pin transfer unit, or (2) a pin is not firmly held by grippers **114** of a particular spotter when delivered to a spotter by the transfer grippers **68** because a worn or damaged pin is pulled out of the spotter by the pin transfer unit, or because of faulty gripper operation such pins are moved up and out of the spotters **110**, or (3) during the turning movement and/or down-

ward movement of table T towards the alley for setting pins thereon, a pin falls out of a spotter 110, the machine is automatically stopped so that damage to the machine is positively prevented and the setting of the proper number of pins in the desired playing arrangement on the alley can be accomplished.

The operation of transfer grippers 68 is substantially the same as that of similar grippers shown and described in the above referred to Rundell Patent 2,388,707. Grippers 68 are moved to engage and grip the butt ends of pins P aligned in magazine M (see Figure 3), after which they are moved to carry pins upwardly out of magazine M, and then along paths 20 into triangular arrangement above the ten spotters 110. The transfer grippers 68 carrying pins are then moved downwardly and the handle end of each pin P carried by its respective gripper 68 (Figure 1) is inserted into cup portion 112 of a spotter 110 in position to be gripped by spotter grippers 114, at which time switches 128 engaged by the handle ends of pins are opened. As noted above, the operation of the machine is stopped whenever a pin is not delivered by a transfer gripper 68 to a spotter 110 because its respective switch 128 remains closed, and also whenever a transfer gripper pulls a pin upwardly out of a spotter cup 112 because its respective open switch 128 closes automatically. Under such conditions the circuit through relay 140 is energized whenever switch 154 is closed, and hence at this time the machine operation is stopped because of the breaking of the circuit through the opening of contacts 142 as the result of the energization of relay 140. It will be seen therefore, that except for the conditions above enumerated and the dropping of a pin from a spotter as pin spotting table T moves towards the alley as described above, the machine continues to operate normally in effecting the delivery of pins from magazine M into spotters 110 and in placing them on the playing bed of the alley.

It will be seen that if a condition should arise where pins are lifted out of one or more spotters and moved back towards the magazine M, upon turning movement of the table, the latter would strike against depending pins held between transfer units and considerable damage might result to the transfer units and their associated grippers 68 or to the table T or both. If this were to occur, pins might be knocked rearwardly into other operating parts of the machine and in the manner described above cause damage thereto. By stopping the operation of the machine, in accordance with the present invention, whenever a pin is not delivered to a particular spotter or spotters, or drops therefrom during movement of table T after the delivery of pins thereto, this condition cannot arise and damage to the machine is prevented.

In case a pin drops from a pin transfer unit before it is placed in a spotter or if a pin should fall from a spotter during the movement of the table, it is obvious that a full set of pins cannot be set properly on the alley. Stoppage of the machine in this case makes it possible for the dropped pins to be positioned manually in proper on-spot position and the play can continue.

Referring to Figures 1 and 2, it will be seen that each spotter 110 is provided with an opening 124 through which projects a spring switch 128 fixed at one end to a non-conducting bracket 128a fastened to housing 120. Switch 128 at its free end is provided with a contact 117 arranged to coact with contact 119 mounted on support 130 also

secured to non-conducting bracket 128a. As shown in Figure 1, contacts 117, 119 are normally closed and are opened when the handle end of a pin is positioned in a spotter in which case switch 128 occupies the position indicated in dotted lines in Figure 1.

Contacts 117, 119 are connected by wires 132, 134, respectively, in multiple in a control circuit 136, 138. A normally closed relay 140 is connected in this circuit. A cam 152 coacting with a switch 154 is also provided for controlling the energization of relay 140 in order to operate relay 140 in accordance with the operation of the suction control mechanism (not shown) which actuates grippers 114.

Reference may be had to co-pending Broekhuysen application, Serial No. 627,608, filed November 11, 1945, for Bowling Pin Setting Machine, which matured as Patent No. 2,559,274, July 3, 1951, for a complete disclosure of the suction control mechanism for operating grippers 114. Since this specific mechanism forms no part of the present invention, it is deemed unnecessary to show or describe it in detail.

As shown in Figure 3, relay 140 is energized with the circuit 136, 138 closed which occurs whenever one or more pins are missing from or fall out of their respective spotters 110 during the period when suction is supplied to said spotters, said period being controlled by cam 152, which during this time also effects the closing of switch 154. Under such conditions, contacts 142 in a circuit containing clutch operating solenoid 312 are opened, and solenoid 312 is deenergized, causing shoe 322 to descend and depress control lug 324, thus effecting a disengagement of clutch 318 from shaft 320. Since clutch 318 is the main machine driving clutch, so long as the clutch is disengaged the machine cannot operate. Suction is supplied to said spotters and switch 154 is closed from the time the pins are deposited in said spotters until the table has turned and reached the alley to set said pins on the alley. Shoe 322 is provided with a vertical stem 314, the upper end of which is pivoted to the armature 316 of the solenoid 312. Stem 314 is guided by means of a suitable stationary bracket 328 and an expansion spring 326 is provided to effect a descent of shoe 322 as soon as solenoid 312 is deenergized.

If a full set of pins is delivered to the spotters 110 so that all switches 128 are opened, relay 140 remains deenergized. Since contacts 142 are closed, solenoid 312 remains energized and the machine completes its normal cycle.

If during the movement of the table, either when it turns or as it moves downwardly towards the alley and into pin setting position relative thereto, a pin should drop from one of the spotters 110 for any reason such as faulty gripper operation, failure of suction to properly actuate the grippers 114 or a damaged pin not being properly held by grippers 114, relay 140 is energized because during that time cam 152 has closed switch 154 and the circuit 136, 138 is closed due to one or more safety switches 128 in spotters 110 being closed due to missing pins. The energization of relay 140 causes an opening of contacts 142 in circuit 310 to solenoid 312 and clutch 318 is thrown out thereby stopping the machine. In a condition of this type, the dropped pin may be removed manually, the machine can be restarted by suitable means (not shown) the pins carried by the spotters are set upon

the alley, and the dropped pin can be set in proper position manually.

The invention above described may be varied in construction within the scope of the claims, for the particular device, selected to illustrate the invention, is but one of many possible concrete embodiments of the same. It is not, therefore, to be restricted to the precise details of the structure shown and described.

What we claim is:

1. In a bowling pin setting machine having a cycle during the operation of which bowling pins are delivered to pin spotters on a pin spotter frame and placed thereby in playing position upon a bowling alley, operating means for said machine, mechanism operative during said portion of said cycle for determining the presence or absence of a bowling pin in each of said spotters, said mechanism including a pin engaging and detecting device mounted on each of said spotters, means positioning each of said devices for engagement by the handle end of a pin placed in a spotter, and means actuated by said detecting devices during the operation of said mechanism for stopping said machine operating means in response to the absence of a bowling pin from any of said spotters.

2. In a bowling pin setting machine having a cycle during a portion of which bowling pins are delivered to pin spotters on a pin spotter frame and placed thereby in playing position upon a bowling alley, a driving shaft for said machine, a driven member, a clutch, means for connecting said clutch in operative engagement with said shaft and said driven member to operate said machine to move said spotters to a pin delivery position adjacent said alley when a full set of pins is to be delivered by said spotters to said alley bed, and mechanism for preventing the operation of said machine if a pin is missing from any of said spotters, said mechanism including a control mechanism, means for operating said control mechanism during said portion of said cycle of said machine when pins are delivered to said spotters and during the delivery of pins by said spotters to said alley bed, pin actuated detectors mounted on each of said spotters, and clutch disengaging means operative by said detectors in response to the absence of a pin from any of said spotters while said control mechanism is operated for throwing out said clutch to disconnect said driving shaft from said driven member.

3. In a bowling pin setting machine, a pin setting table, a plurality of pin spotters provided with pin holding means mounted in playing arrangement on said table, said table being adapted to be moved from pin receiving position to and from pin spotting position relative to a bowling alley, a pin transferring means adapted to convey pins from a loading station and deliver the same to said spotters, means for driving said machine, including a drive shaft, a driven member, a clutch coupling said shaft and said driven member, a pin actuated detector associated with each of said spotters, a normally closed switch operated by each of said detectors, a normally closed clutch operating circuit, a solenoid in said circuit for operating said clutch, a normally open electric circuit including a parallel circuit connecting each of said switches in said last-named circuit, and means operative in response to the closing of a switch circuit due to the absence of a pin in a spotter for breaking said clutch operating circuit and de-energizing said solenoid to throw out said clutch and uncouple said driving shaft from said driven members, whereby further operation of said machine is prevented.

PETER M. NEJEDLY.
AXEL B. JOHANSSON.

REFERENCES CITED

The following references are of record in the file of this patent:

UNITED STATES PATENTS

Number	Name	Date
1,190,645	Hedenskoog	July 11, 1916
1,590,124	Roble	June 22, 1926
1,692,796	Bishop	Nov. 20, 1928
1,994,411	Thomas	Mar. 12, 1935
2,283,614	Schmidt	May 19, 1942
2,319,925	Flanagan	May 25, 1943
2,338,733	Patterson et al.	Jan. 11, 1944
2,388,707	Rundell	Nov. 13, 1945
2,388,708	Bates	Nov. 13, 1945
2,388,709	Rundell	Nov. 13, 1945