US010076220B2

(12) **United States Patent**
Chen

(10) **Patent No.: US 10,076,220 B2**
(45) **Date of Patent: *Sep. 18, 2018**

(54) **FLOOR CLEANING MACHINES HAVING INTELLIGENT SYSTEMS, ASSOCIATED SUB-ASSEMBLIES INCORPORATING INTELLIGENT SYSTEMS, AND ASSOCIATED METHODS OF USE**

(71) Applicant: **Nai Pong Simon Chen**, Shanghai (CN)

(72) Inventor: **Nai Pong Simon Chen**, Shanghai (CN)

(73) Assignee: **International Cleaning Equipment Holdings Co., Ltd.** (VG)

(*) Notice: Subject to any disclaimer, the term of this patent is extended or adjusted under 35 U.S.C. 154(b) by 0 days.

This patent is subject to a terminal disclaimer.

(21) Appl. No.: **14/666,904**

(22) Filed: **Mar. 24, 2015**

(65) **Prior Publication Data**

US 2015/0265123 A1 Sep. 24, 2015

Related U.S. Application Data

(60) Provisional application No. 61/969,559, filed on Mar. 24, 2014.

(51) **Int. Cl.**
G08B 21/00 (2006.01)
A47L 11/40 (2006.01)
(Continued)

(52) **U.S. Cl.**
CPC ***A47L 11/4011*** (2013.01); ***A47L 11/283*** (2013.01); ***A47L 11/4008*** (2013.01);
(Continued)

(58) **Field of Classification Search**
None
See application file for complete search history.

(56) **References Cited**

U.S. PATENT DOCUMENTS

4,580,313 A 4/1986 Blehert
4,667,364 A * 5/1987 Meili A47L 11/293 15/319
(Continued)

FOREIGN PATENT DOCUMENTS

EP 1 755 431 2/2007
EP 2 628 427 8/2013
(Continued)

OTHER PUBLICATIONS

PCT Written Opinion of the International Searching Authority for International Application No. PCT/US15/022239 dated Jul. 16, 2015.

Primary Examiner — Julie Lieu
(74) *Attorney, Agent, or Firm* — King & Partners, PLC

(57) **ABSTRACT**

A floor cleaning machine having an intelligent system including a recovery tank sub-assembly, a vacuum fan sub-assembly, a solution tank sub-assembly, wherein the solution tank sub-assembly preferably includes a secondary electrochemical cell, a solution flow sub-assembly, a control console sub-assembly, a frame and wheel sub-assembly and/or a frame and transaxle sub-assembly, a scrub head sub-assembly, a scrub head lift sub-assembly, a squeegee sub-assembly, a solution flow sub-assembly, and an intelligent system associated with at least one of the above-identified sub-assemblies, wherein the intelligent system at least one of selectively gathers, obtains, monitors, stores, records, and analyzes data associated with components of the floor cleaning machine assembly, and at least one of controllably communicates and disseminates such data with at least one of another system and user.

20 Claims, 20 Drawing Sheets

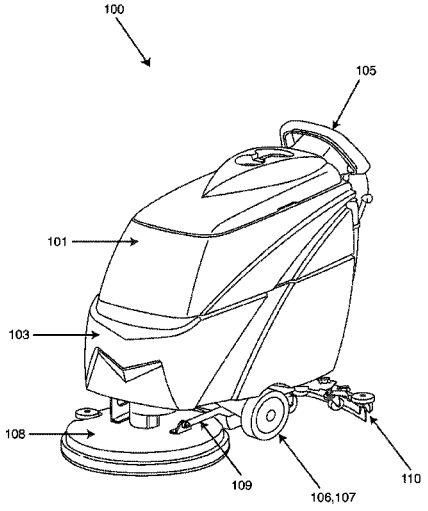

(51) **Int. Cl.**

H04Q 9/00	(2006.01)
G06Q 10/00	(2012.01)
A47L 11/283	(2006.01)
G06Q 30/06	(2012.01)

(52) **U.S. Cl.**

CPC ***A47L 11/4013*** (2013.01); ***A47L 11/4044*** (2013.01); ***A47L 11/4055*** (2013.01); ***A47L 11/4061*** (2013.01); ***A47L 11/4083*** (2013.01); ***G06Q 10/20*** (2013.01); ***G06Q 30/0633*** (2013.01); ***H04Q 9/00*** (2013.01); *H04Q 2209/43* (2013.01); *H04Q 2209/823* (2013.01)

(56) **References Cited**

U.S. PATENT DOCUMENTS

4,675,935	A *	6/1987	Kasper	A47L 11/4011 15/319
4,716,621	A	1/1988	Zoni	
4,819,676	A	4/1989	Blehert et al.	
4,831,684	A	5/1989	Duncan	
5,093,955	A	3/1992	Blehert et al.	
5,239,720	A	8/1993	Wood et al.	
5,265,300	A	11/1993	O'Hara et al.	
5,435,035	A *	7/1995	Fujimoto	A47L 11/162 15/49.1
5,621,301	A *	4/1997	Allen	G06F 1/1616 307/48
6,532,672	B1 *	3/2003	Gottlieb	G01B 5/26 33/124
7,199,711	B2	4/2007	Field	
7,269,877	B2 *	9/2007	Tondra	A47L 9/2805 15/319
7,448,114	B2	11/2008	Basham et al.	
7,461,430	B2	12/2008	Mitrisin et al.	
8,584,294	B2 *	11/2013	Loring	A47L 11/283 15/49.1
2005/0254185	A1 *	11/2005	Cunningham	A47L 5/38 361/23
2007/0186369	A1 *	8/2007	Field	A47L 11/302 15/320
2012/0097201	A1 *	4/2012	Field	A47L 11/302 134/58 R
2012/0271645	A1 *	10/2012	Dain	G06Q 10/00 705/1.1
2016/0195577	A1 *	7/2016	Osaka	G01R 31/3662 204/407

FOREIGN PATENT DOCUMENTS

KR	1020130027345	3/2013
WO	WO 2003/041554	5/2003

* cited by examiner

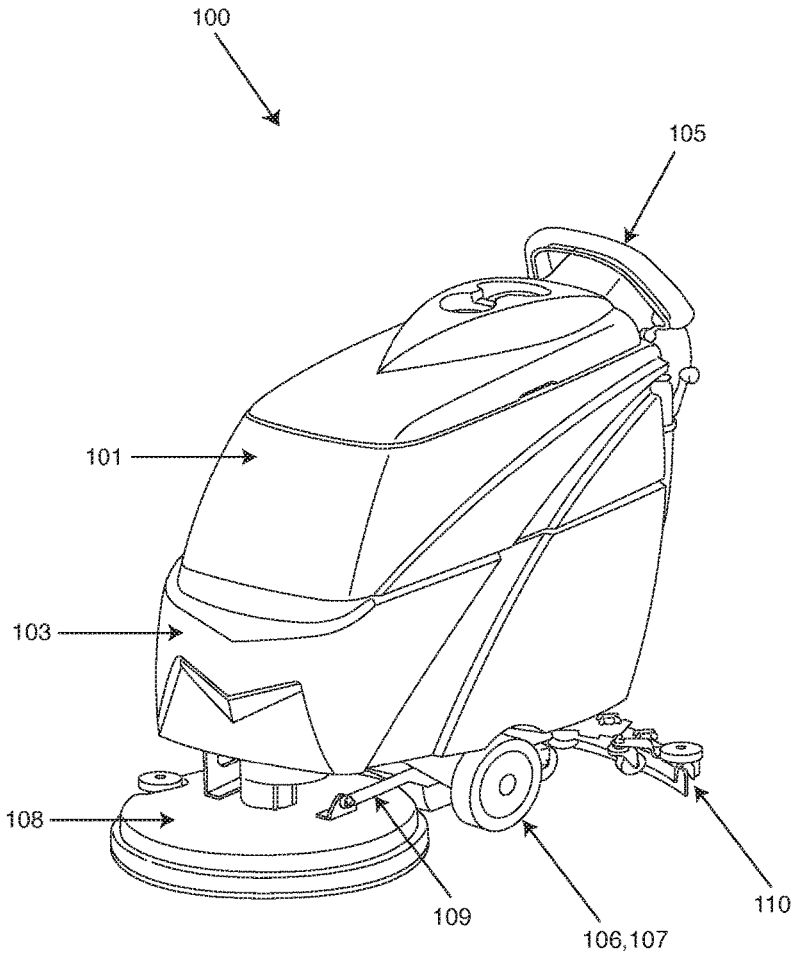

Figure 1

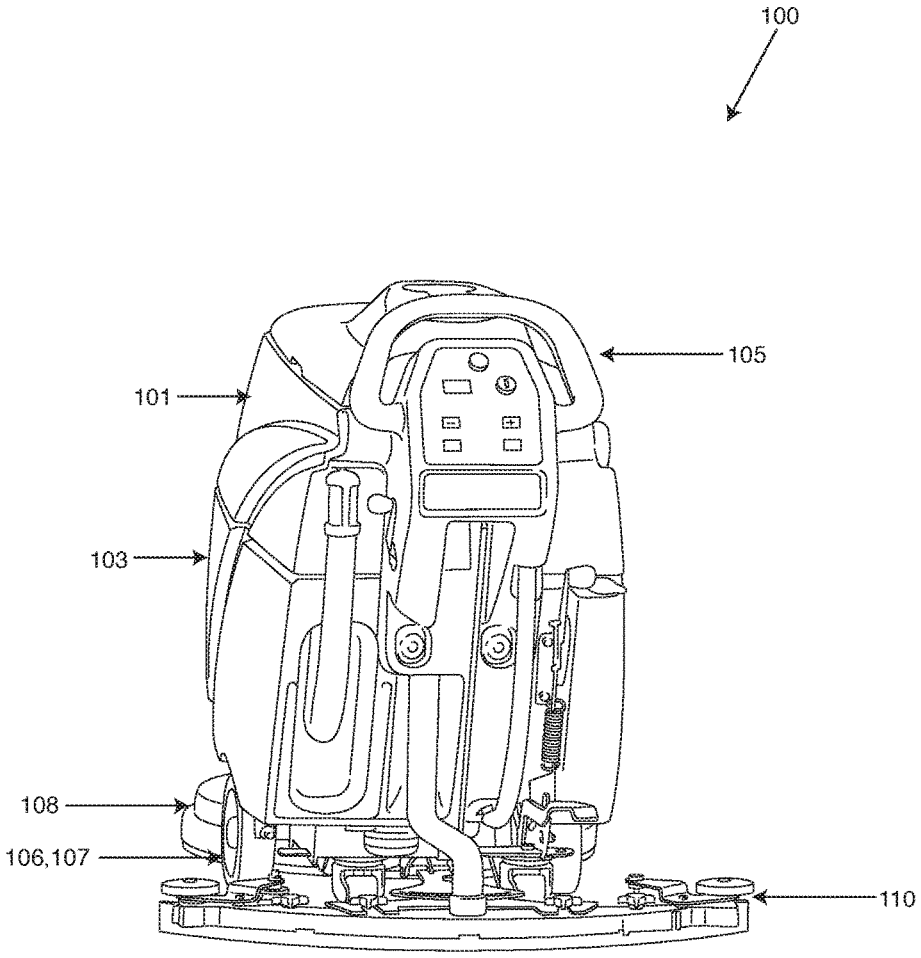

Figure 2

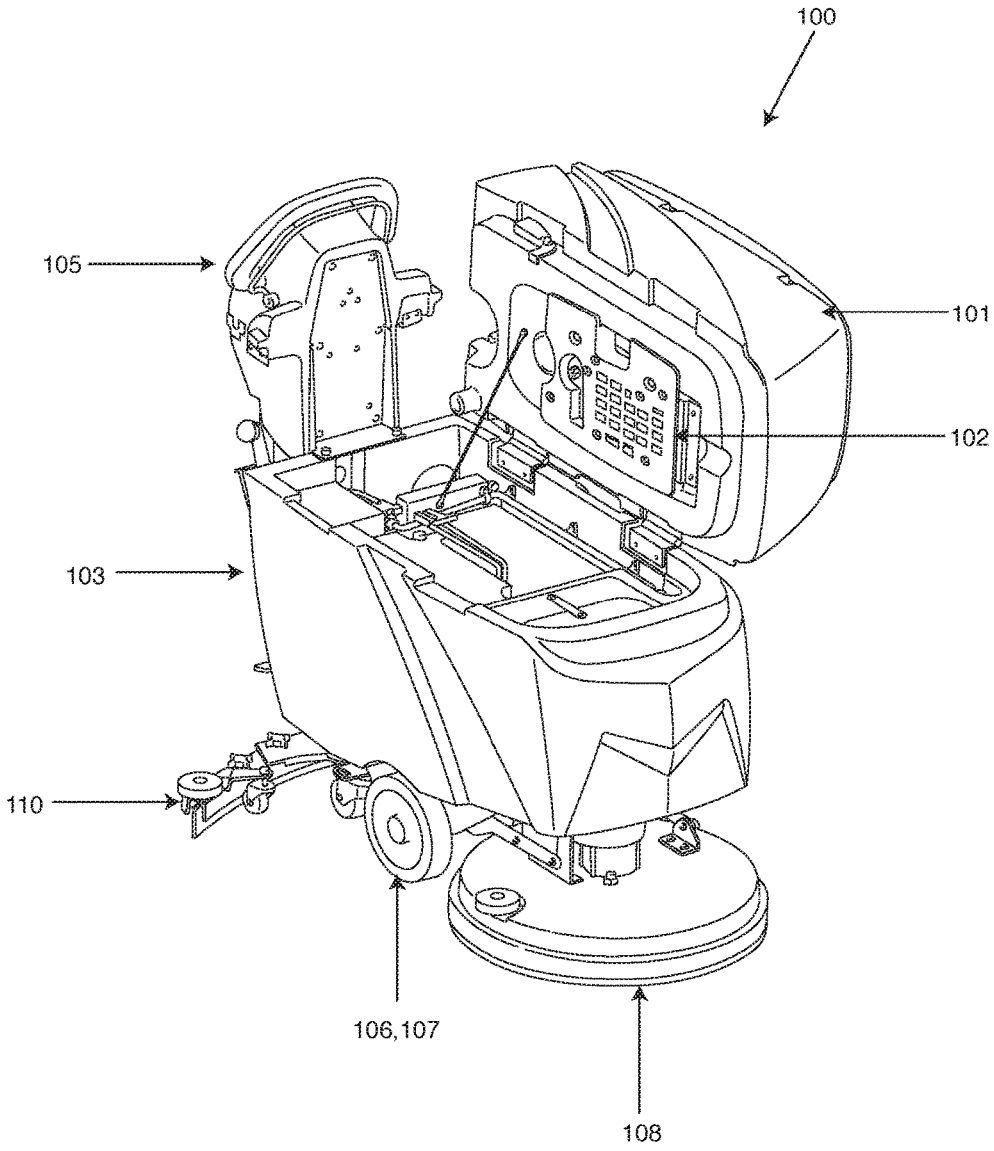

Figure 3

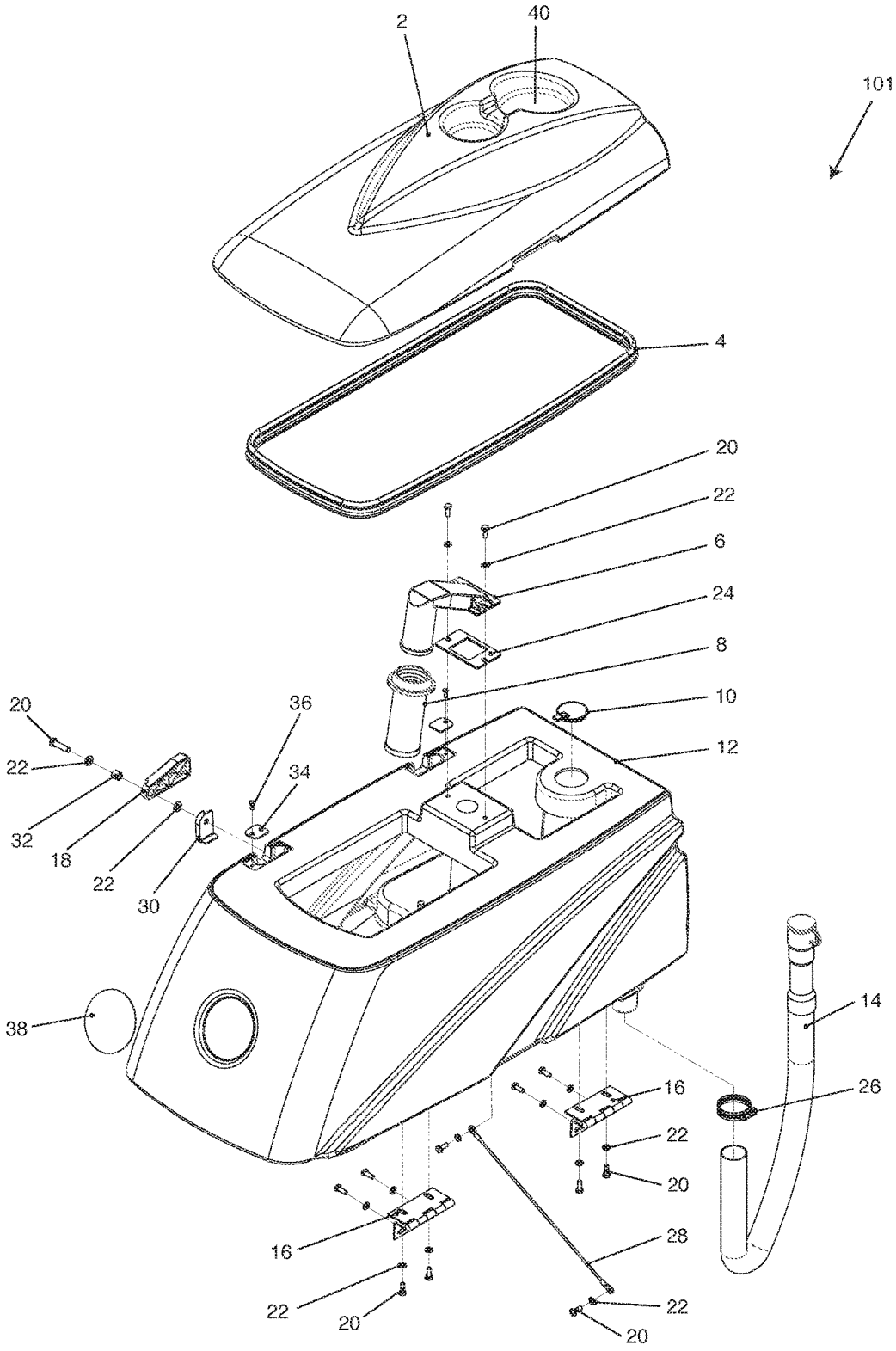
2
40
101
4
20
22
6
24
8
10
12
20
22
32
18
22
30
36
34
38
14
16
26
22
20
16
28
22
20
22
20

Figure 4

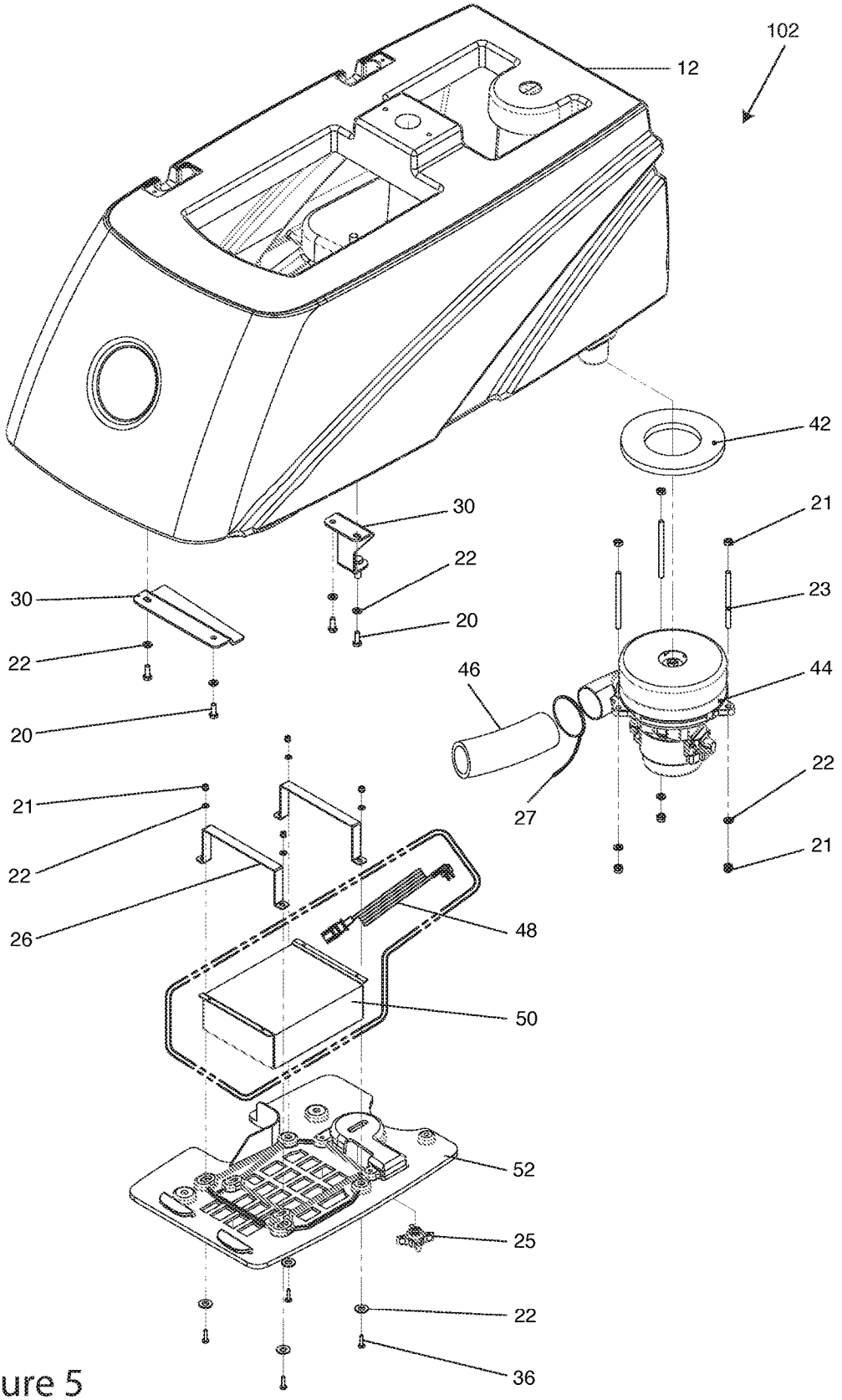

Figure 5

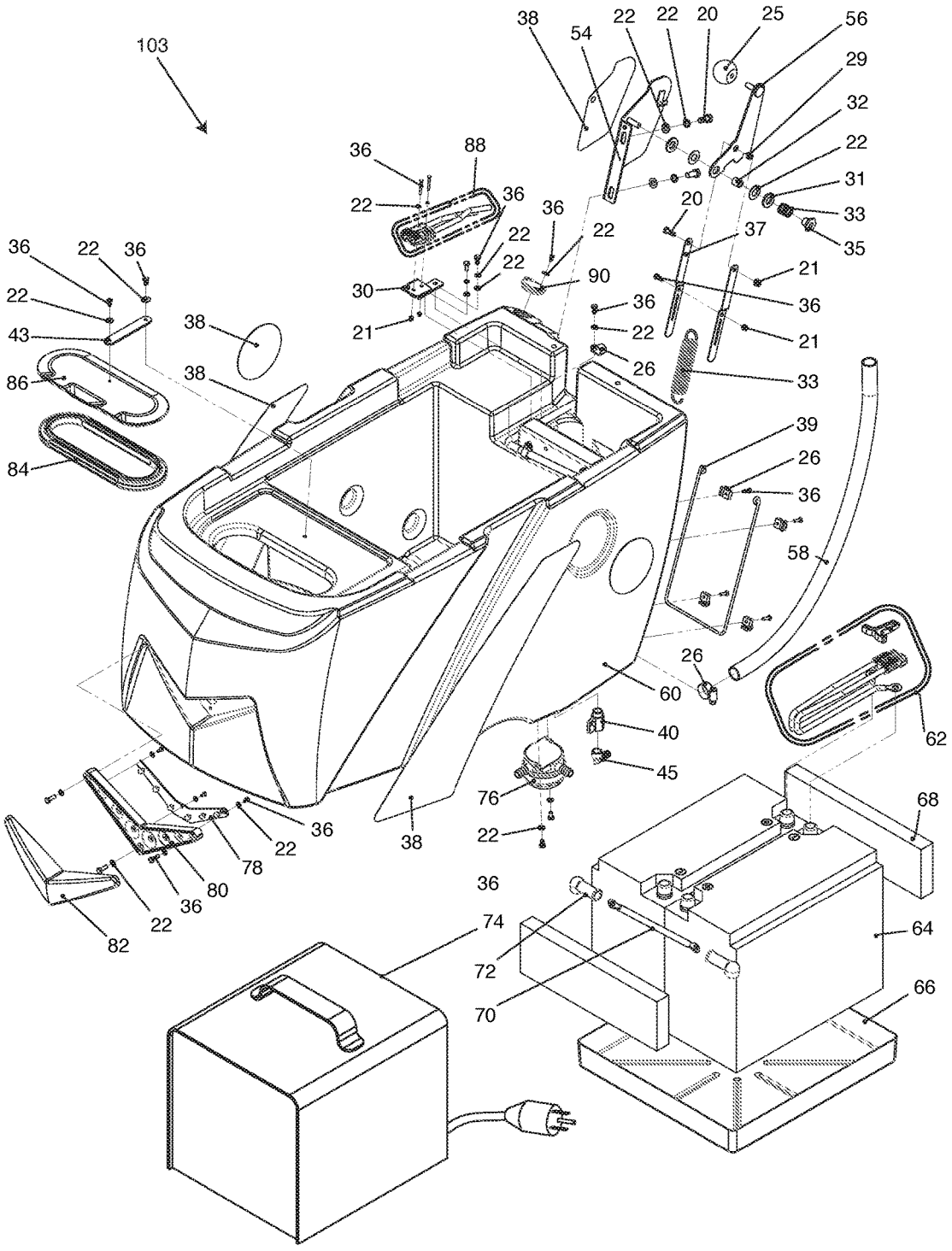
103
38
54
22
22
20
25
56
29
32
22
31
33
35
36
88
22
36
36
22
22
22
20
37
21
36
21
36
22
36
22
43
38
86
38
84
30
21
90
36
22
26
33
39
26
36
58
26
60
40
45
62
76
22
38
36
22
78
80
36
22
82
68
36
74
72
70
64
66

Figure 6

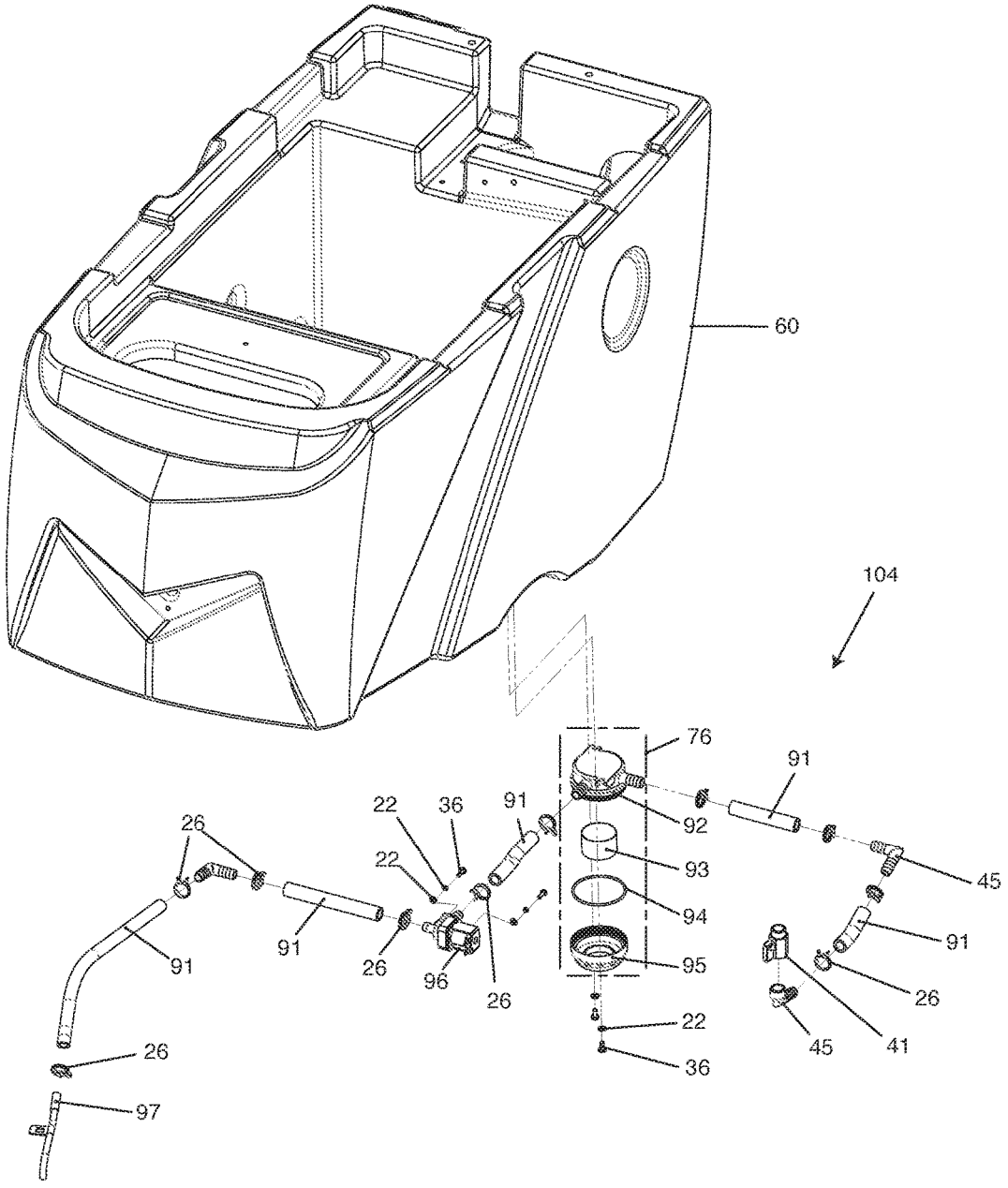

Figure 7

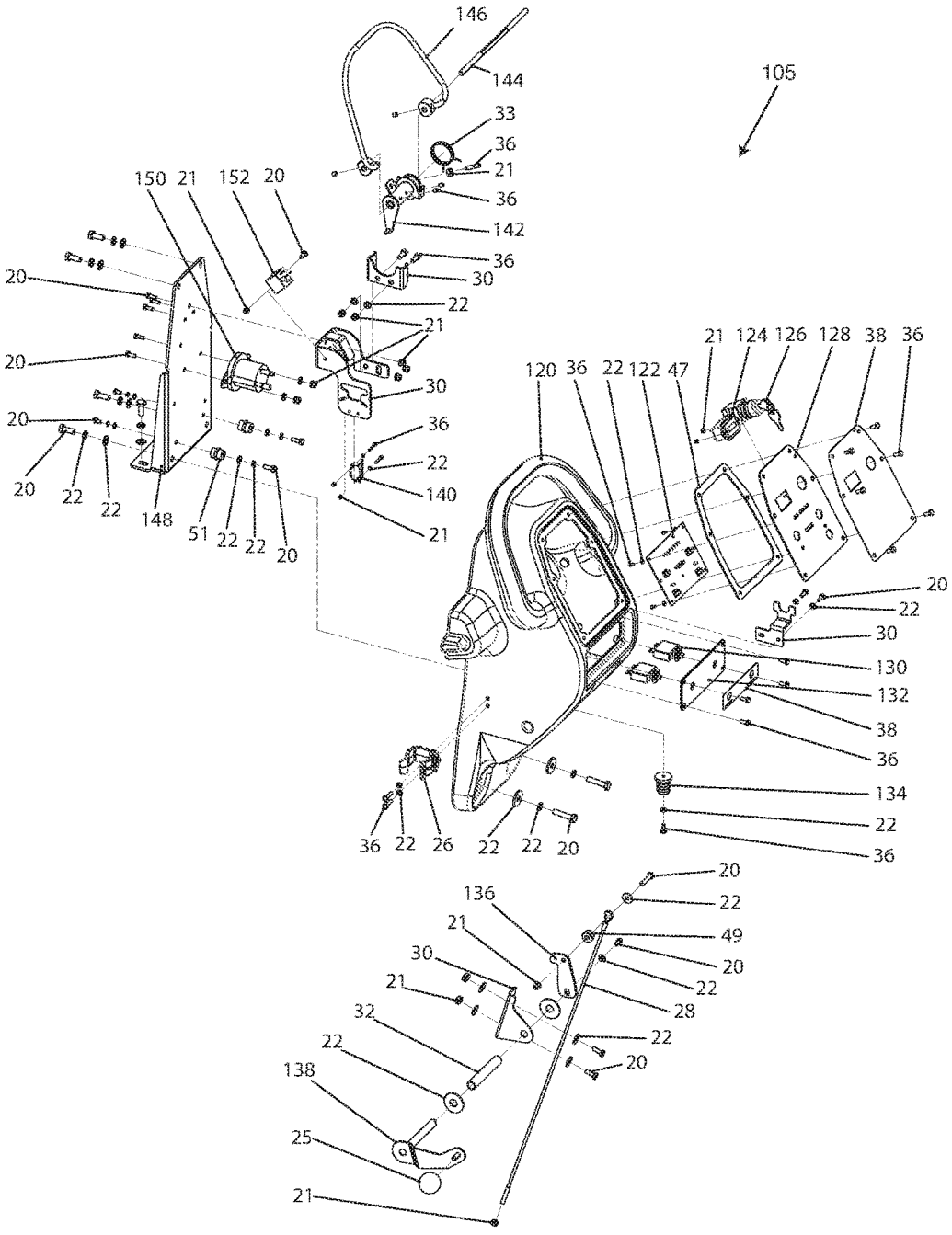
146
144
105
33
36
21
36
142
150
21
152
20
36
30
22
21
20
20
20
20
22
22
148
51
22
22
20
30
36
22
140
21
120
36
22
122
47
21
124
126
128
38
36
20
22
30
130
132
38
36
134
22
36
36
22
26
22
22
20
136
21
30
21
32
22
138
25
21
20
22
49
20
22
28
22
20

Figure 8

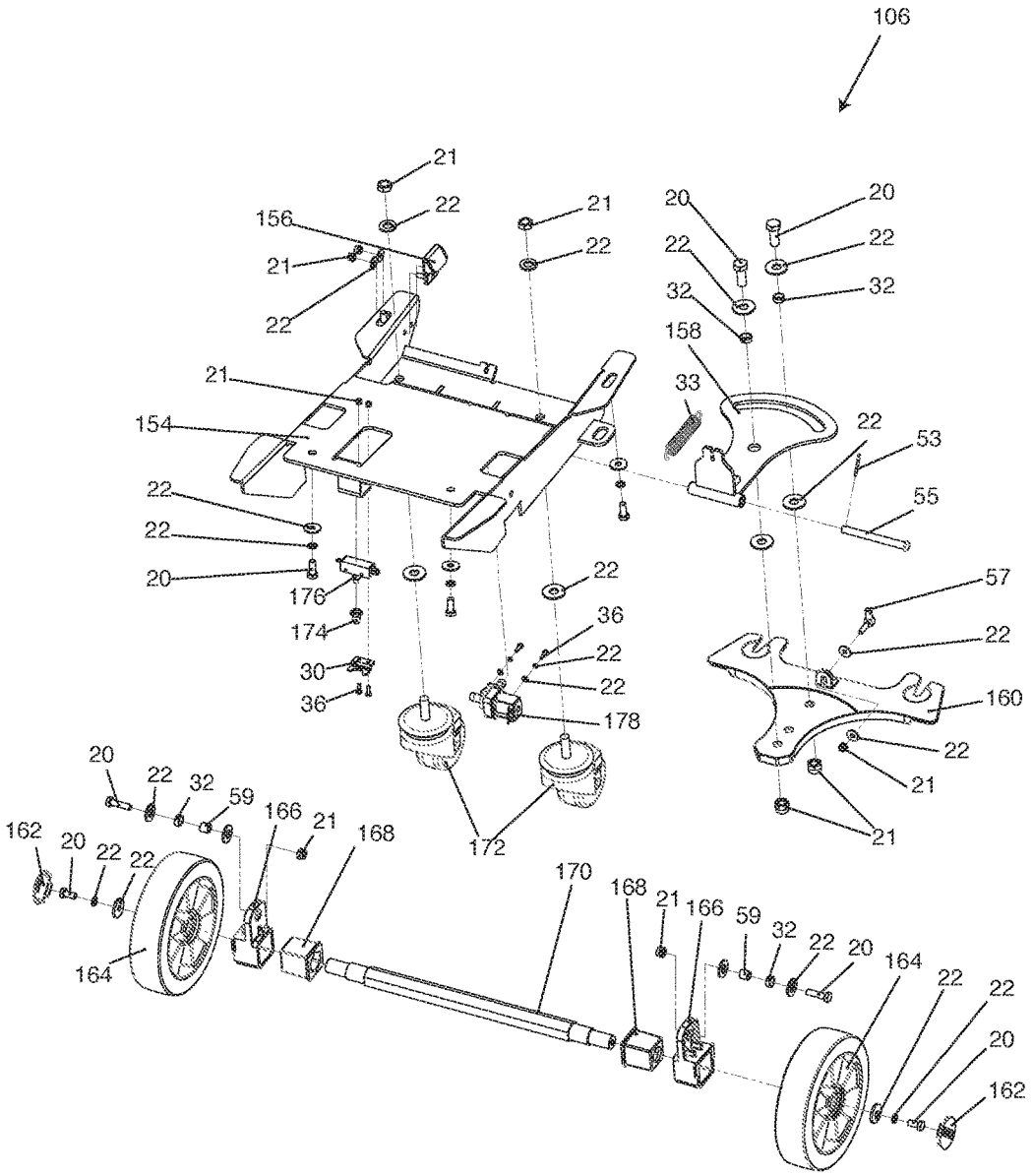
106
21
22
156
21
22
21
154
22
22
20
176
174
30
36
21
22
22
36
22
22
178
172
20
22
32
59
166
21
168
162
20
22
22
164
170
168
21
166
59
32
22
20
164
22
22
20
162
20
22
32
158
33
22
53
55
57
22
160
22
21
21

Figure 9A

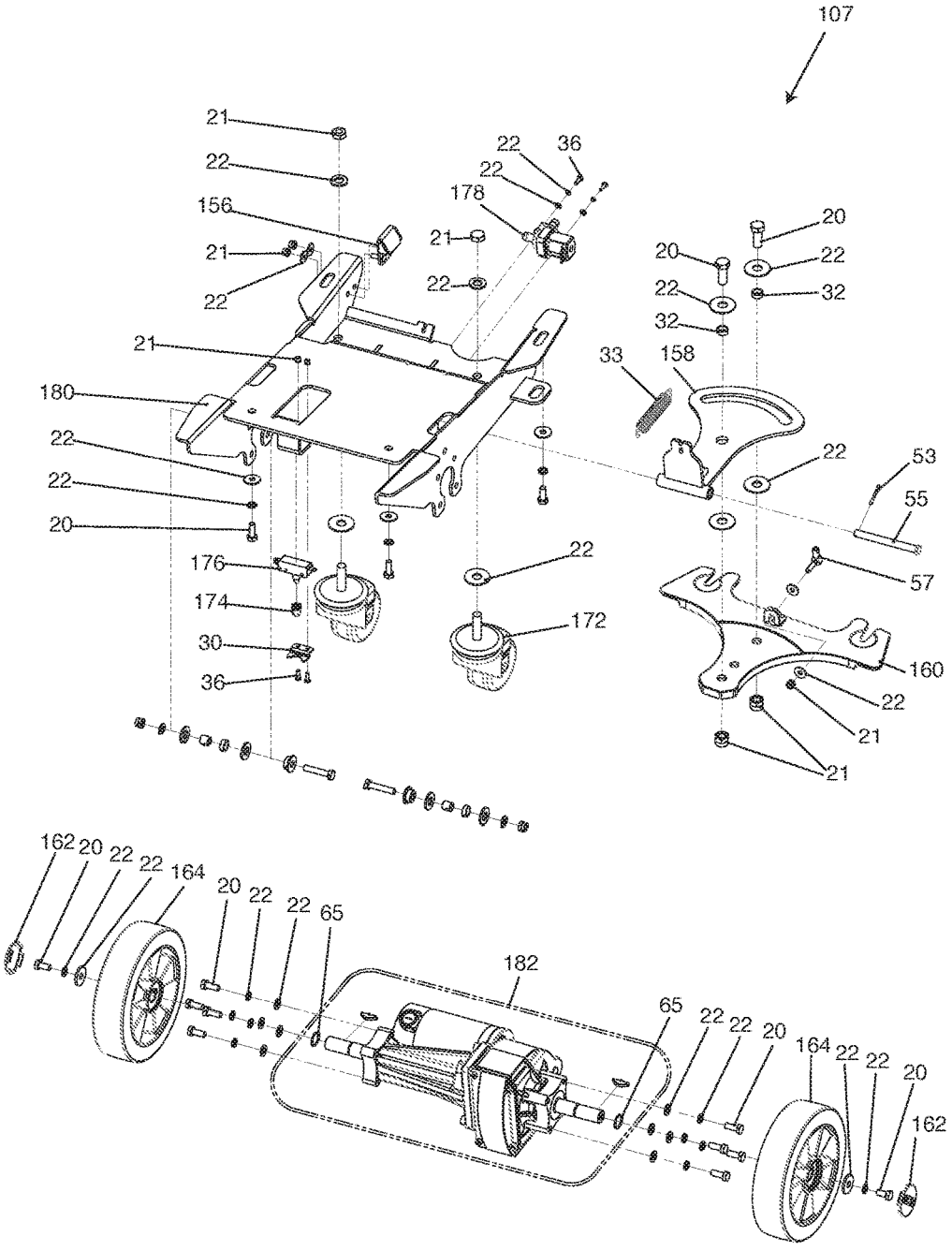
107
21
22
156
21
22
21
180
22
22
20
176
174
30
36
22
36
22
178
21
22
172
20
20
22
32
22
32
33
158
22
53
55
57
160
22
21
21
162
20
22
22
164
20
22
22
65
182
65
22
22
20
164
22
22
20
162

Figure 9B

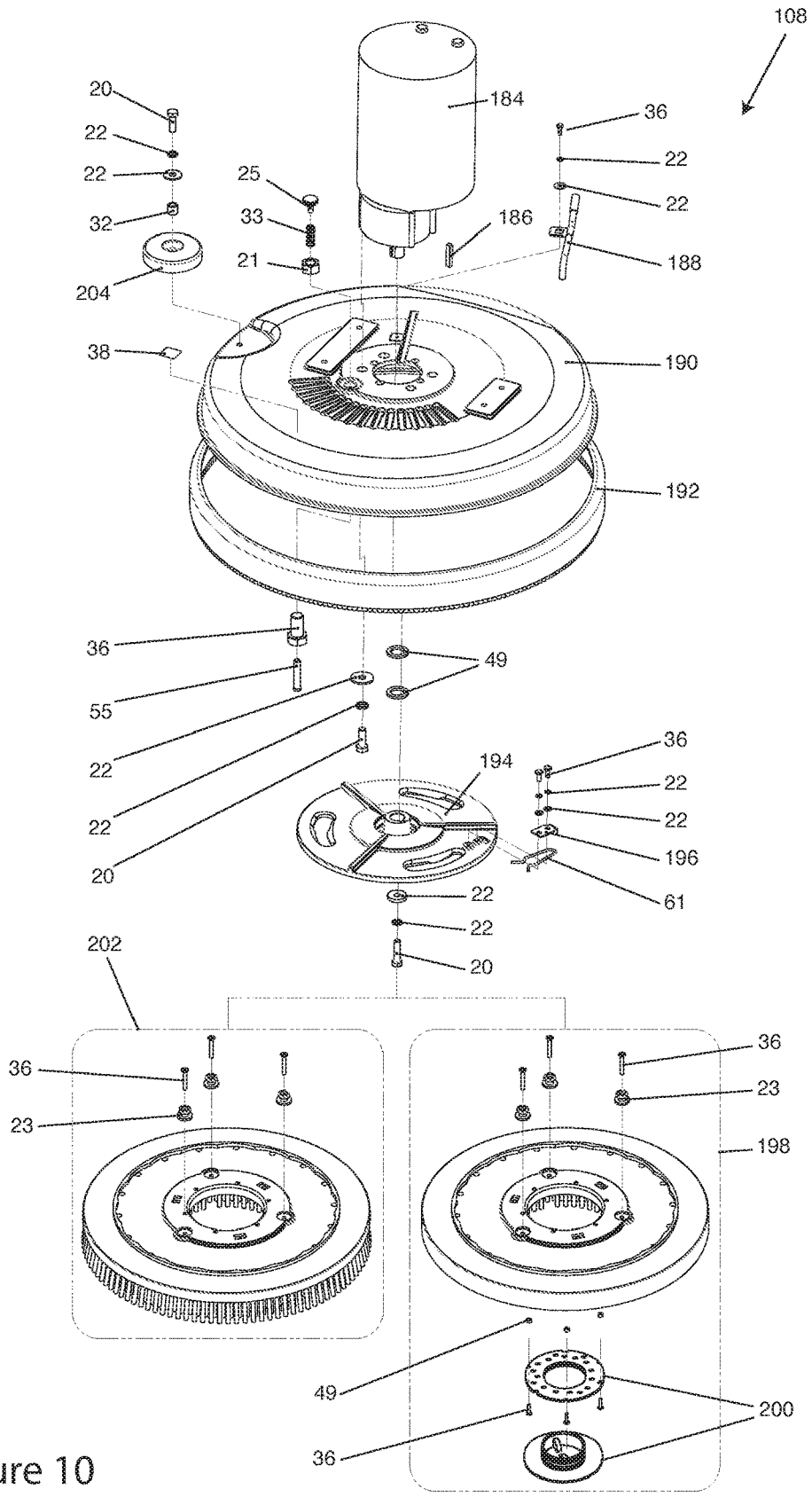
108
20
22
22
32
204
25
33
21
184
186
36
22
22
188
38
190
192
36
49
55
22
22
20
194
36
22
22
196
61
22
22
20
202
36
23
36
23
198
49
200
36

Figure 10

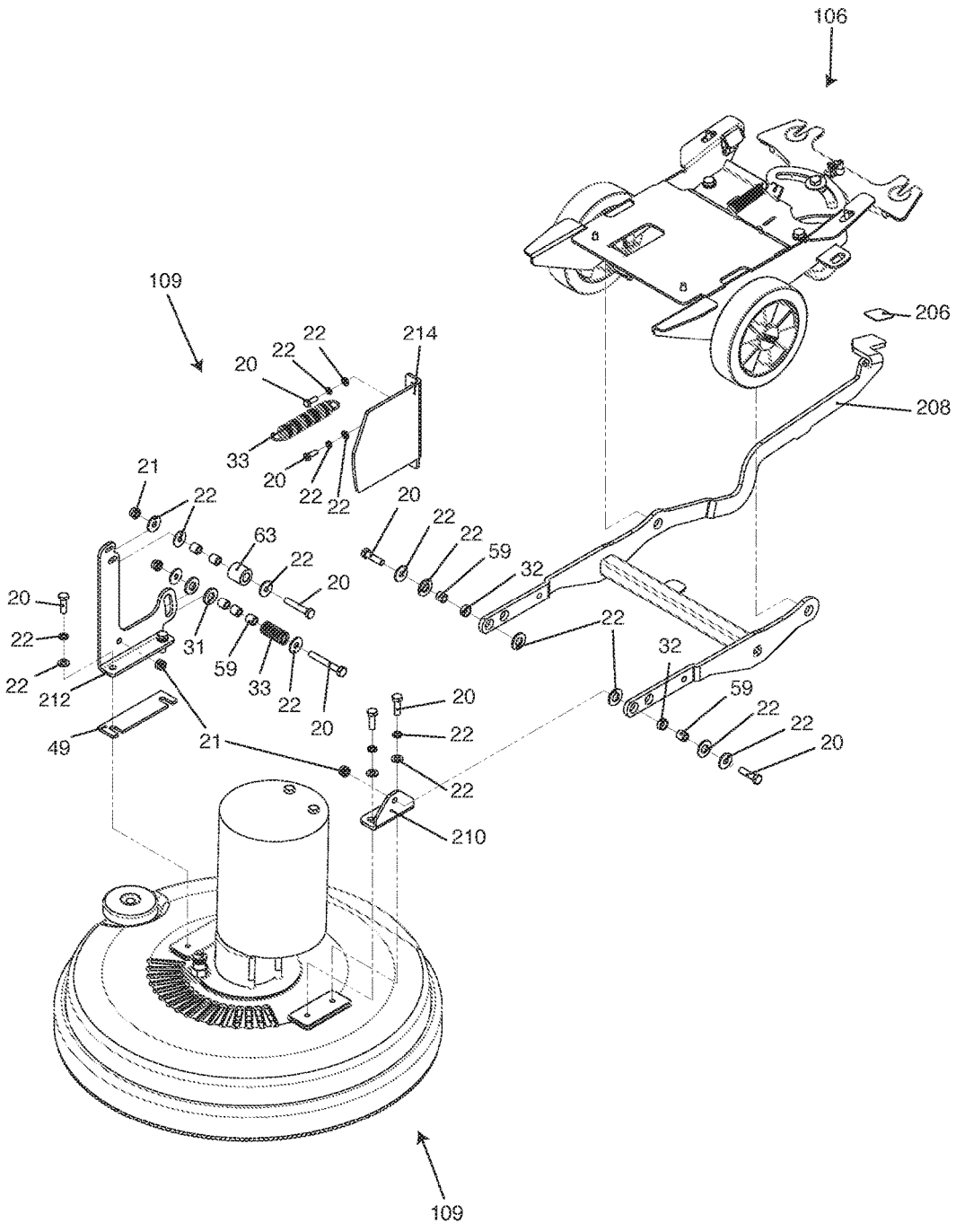

Figure 11

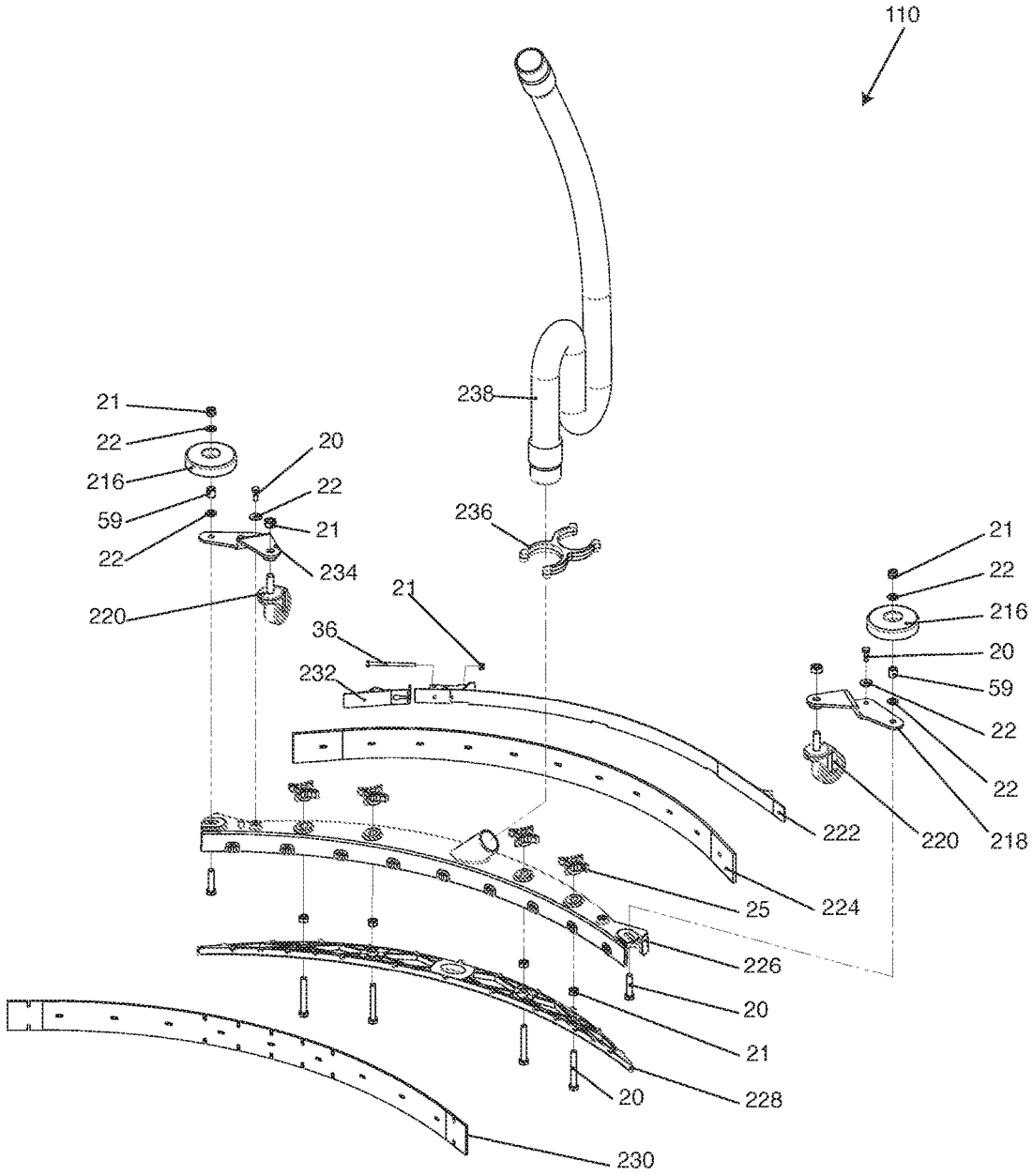
110
238
21
22
216
59
22
20
22
21
234
220
236
21
36
232
222
25
224
226
20
21
228
20
230
21
22
216
20
59
22
22
220
218

Figure 12

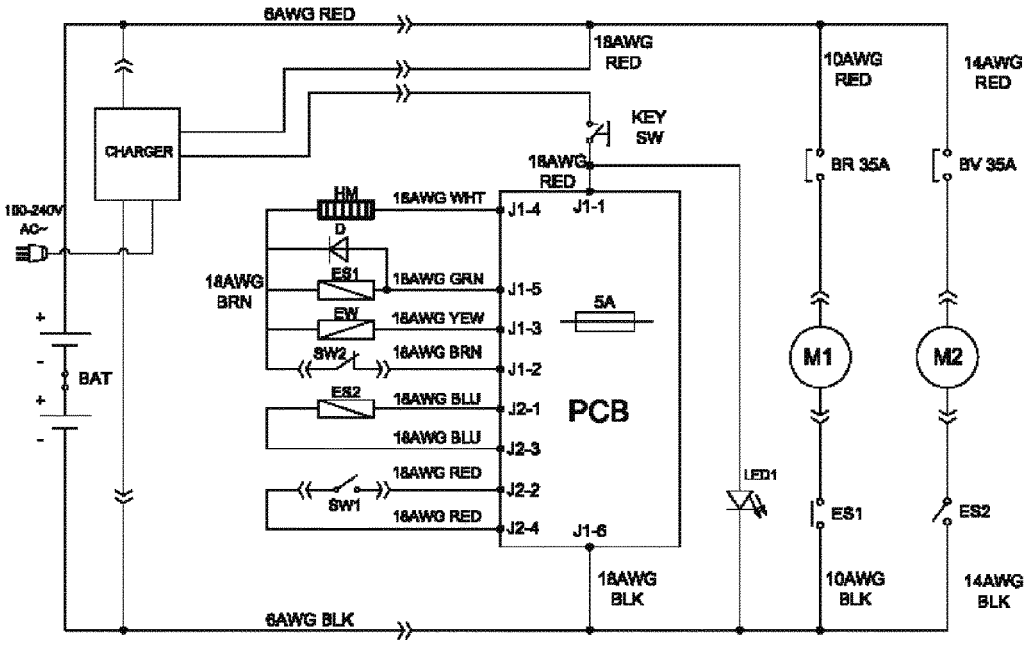

BAT: 2-12V Batteries
CHARGER: On board battery charger
KEY SW: Main power Key switch
HM: Hour meter
D: Diode
ES1: Brush motor solenoid switch
EW: Solution solenoid valve switch
SW2: Safe switch, Scrub head lifting
ES2: Vacuum motor relay

ES2: Vacuum motor relay
SW1: Control handle start bail switch
PCB: Function electronic board
LED1: Running lights
BR: Circuit breaker, Brush motor
BV: Circuit breaker, Vacuum motor
M1: Brush motor
M2: Vacuum motor

Figure 13A

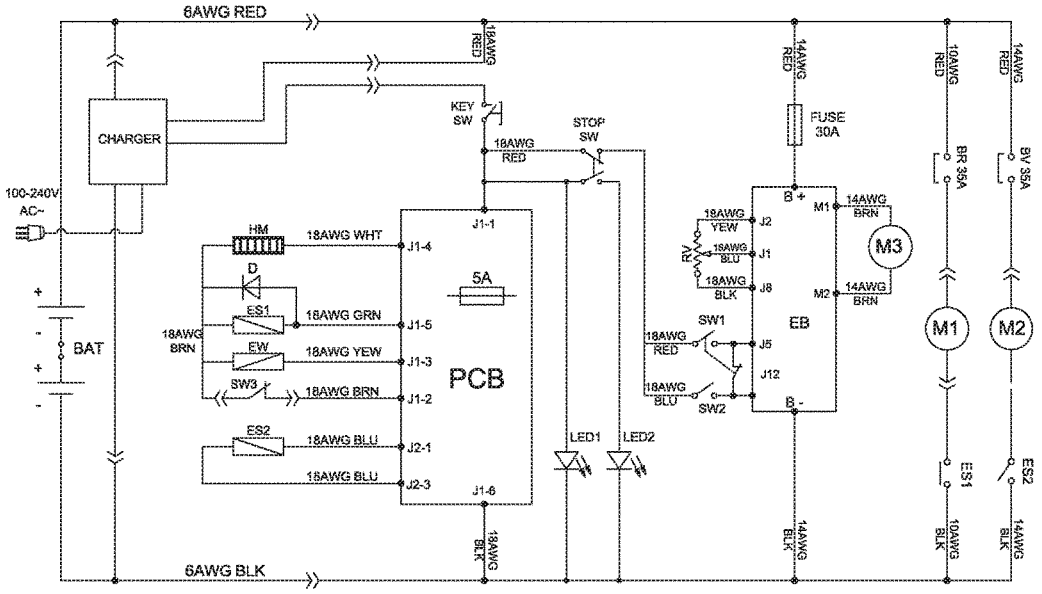

BAT: 2-12V Batteries
CHARGER: On board battery charger
KEY SW: Main power Key switch
HM: Hour meter
D: Diode
ES1: Brush motor solenoid switch
EW: Solution solenoid valve switch
SW3: Safe switch, scrub head lifting
ES2: Vacuum motor relay
PCB: Function electronic board
STOP SW: Emergency stop switch

LED1: Running lights
LED2: Emergency stop lights
RV: Speed potentiometer
SW1: Control handle bail switch, forward
SW2: Control handle bail switch, backward
EB: Speed control board
M3: Transaxle motor
BR: Circuit breaker, Brush motor
BV: Circuit breaker, Vacuum motor
M1: Brush motor
M2: Vacuum motor

Figure 13B

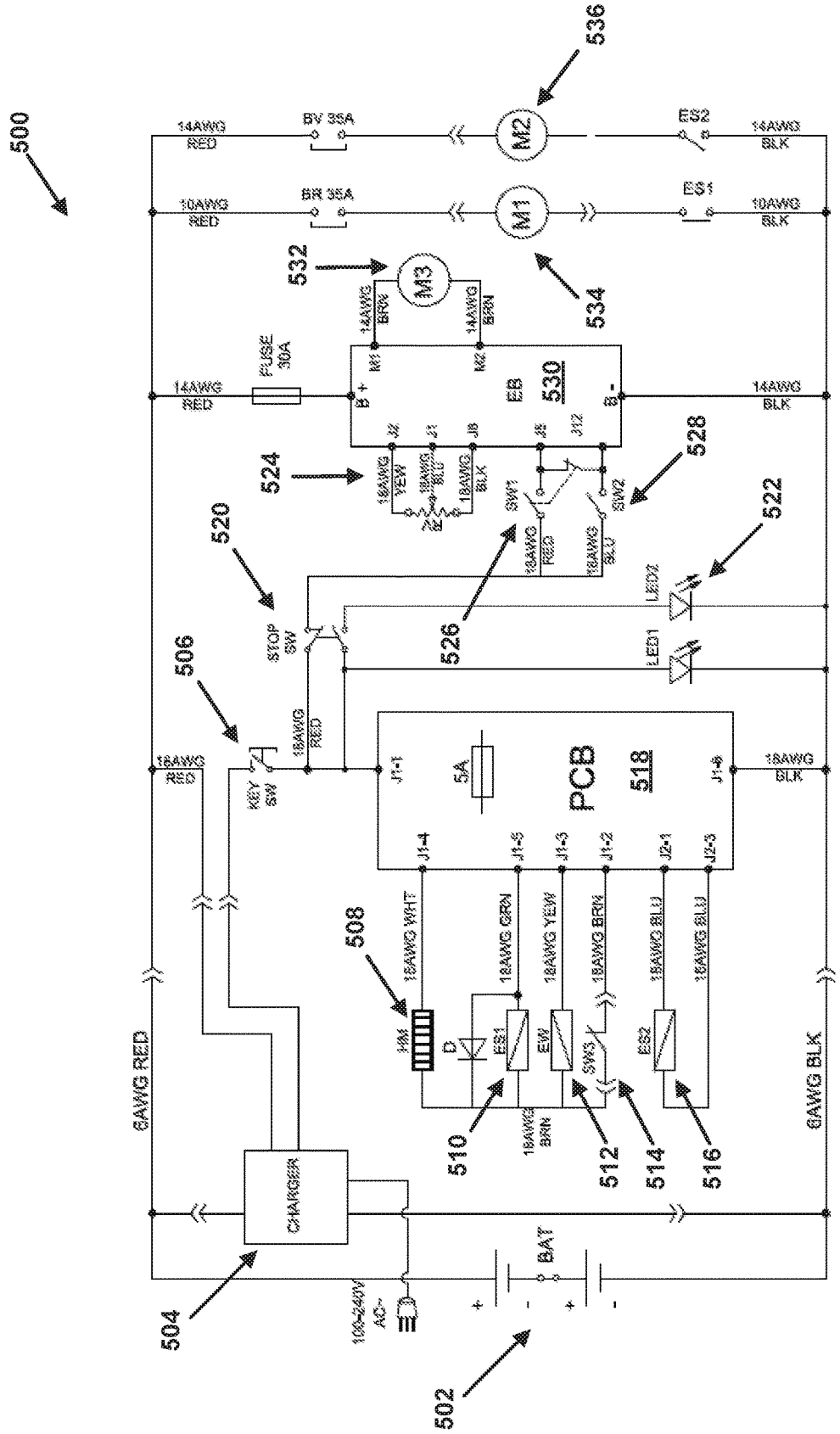
500
536
14AWG RED
BV 35A
M2
ES2
14AWG BLK
10AWG RED
BR 35A
M1
ES1
10AWG BLK
532
M3
534
14AWG BRN
FUSE 30A
EB
530
14AWG RED
14AWG BLK
524
528
SW1
SW2
18AWG RED
18AWG BLU
522
520
STOP SW
526
LED2
LED1
506
18AWG RED
KEY SW
PCB
518
5A
18AWG BLK
508
18AWG WHT
18AWG GRN
18AWG YEW
18AWG BRN
18AWG BLU
HM
D
ES1
EW
SW3
ES2
6AWG RED
6AWG BLK
510
512
514
516
CHARGER
BAT
504
100-240V AC~
502

Figure 14

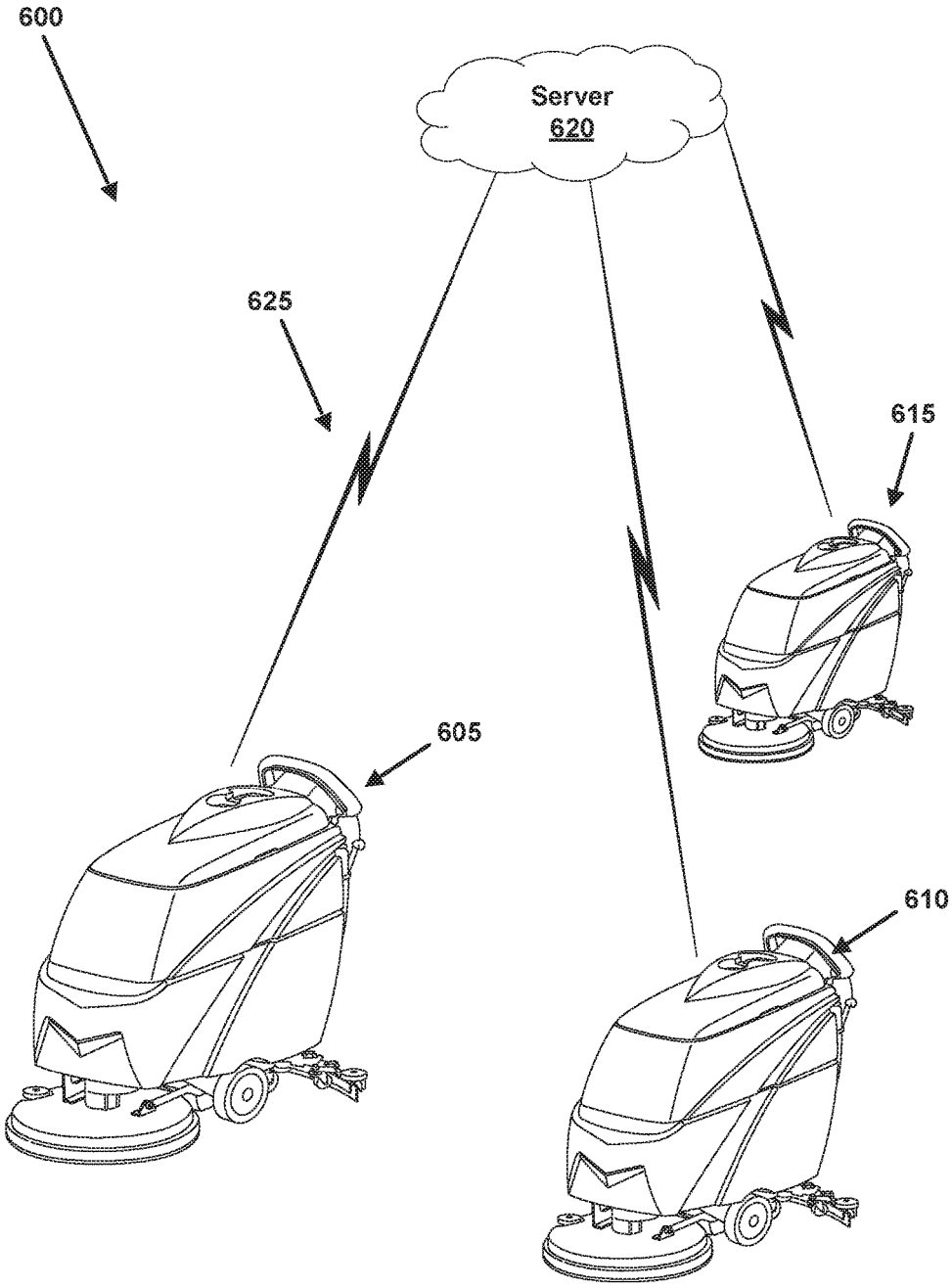

Figure 15

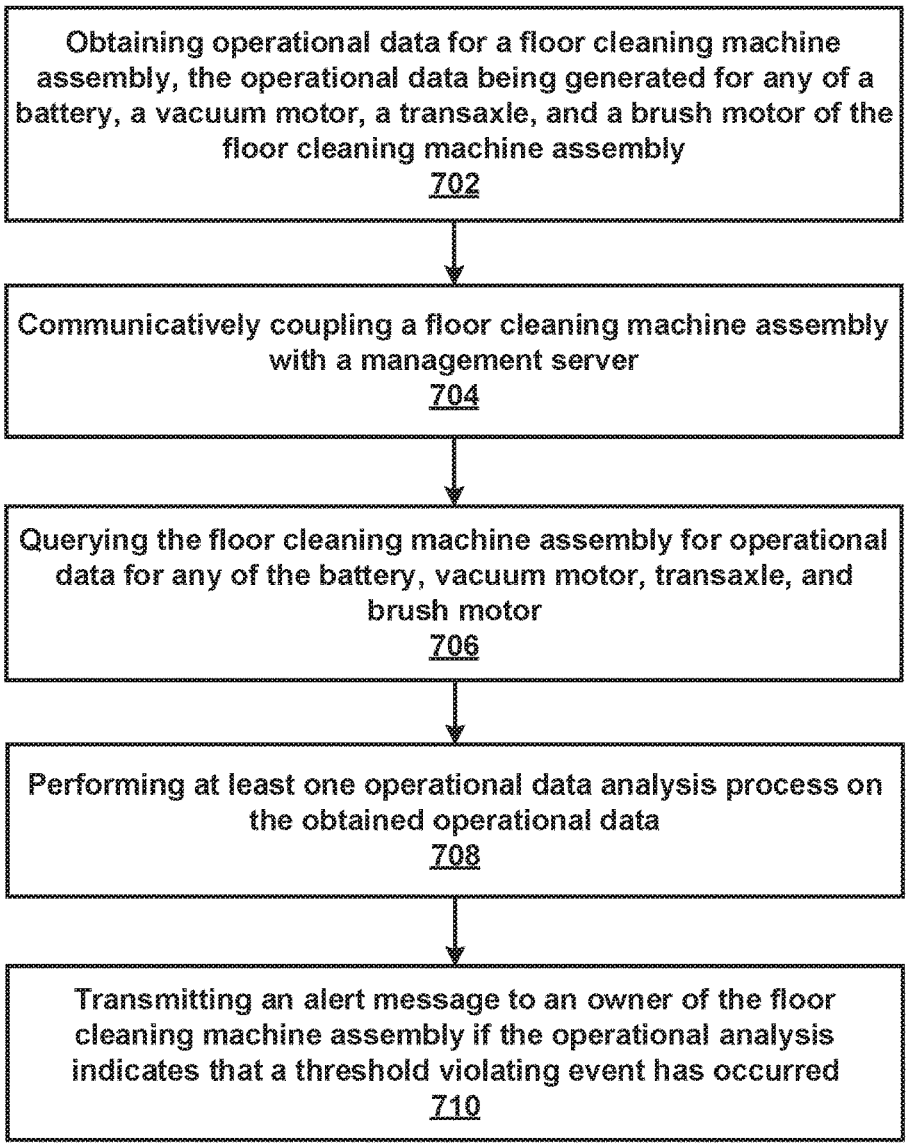
Obtaining operational data for a floor cleaning machine assembly, the operational data being generated for any of a battery, a vacuum motor, a transaxle, and a brush motor of the floor cleaning machine assembly
702
Communicatively coupling a floor cleaning machine assembly with a management server
704
Querying the floor cleaning machine assembly for operational data for any of the battery, vacuum motor, transaxle, and brush motor
706
Performing at least one operational data analysis process on the obtained operational data
708
Transmitting an alert message to an owner of the floor cleaning machine assembly if the operational analysis indicates that a threshold violating event has occurred
710

Figure 16

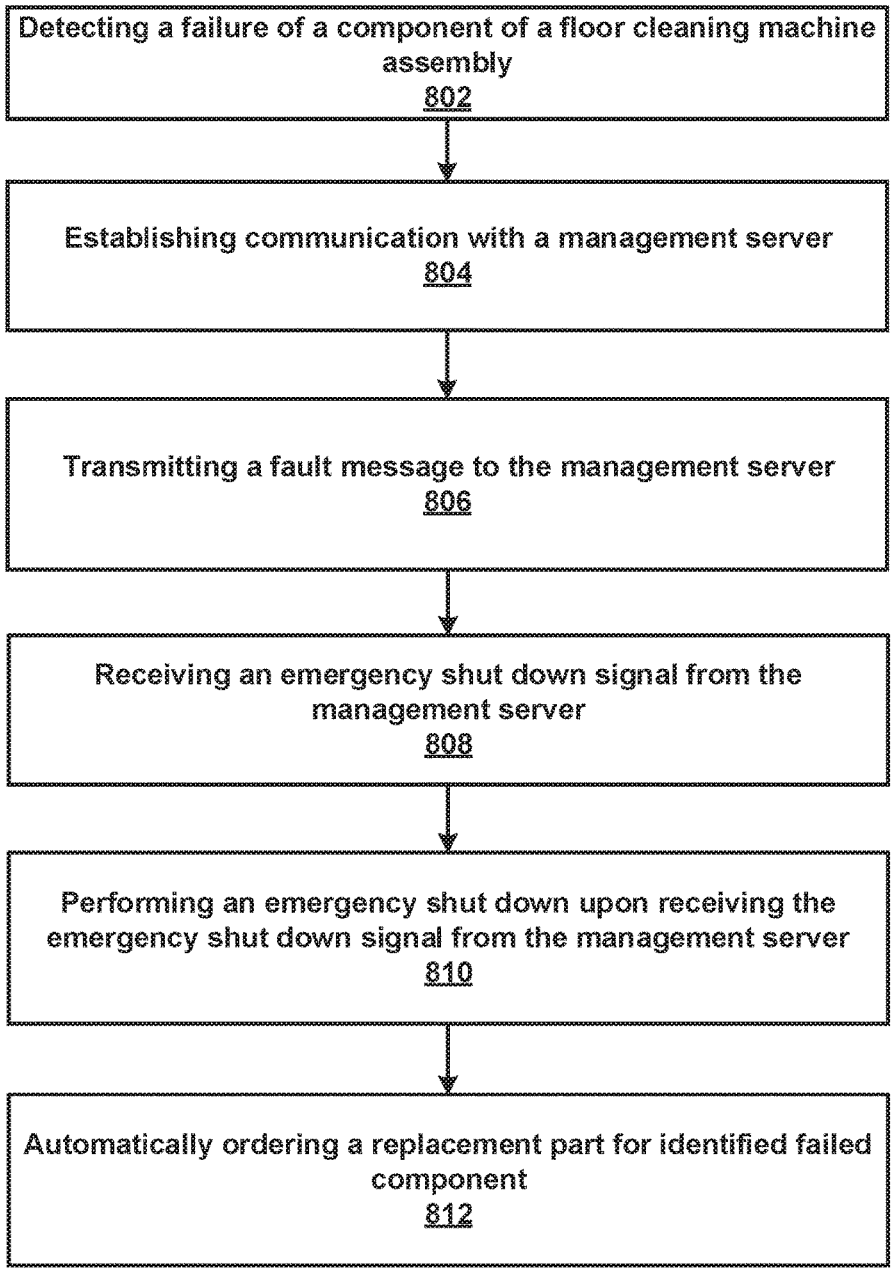
Detecting a failure of a component of a floor cleaning machine assembly
802
Establishing communication with a management server
804
Transmitting a fault message to the management server
806
Receiving an emergency shut down signal from the management server
808
Performing an emergency shut down upon receiving the emergency shut down signal from the management server
810
Automatically ordering a replacement part for identified failed component
812

Figure 17

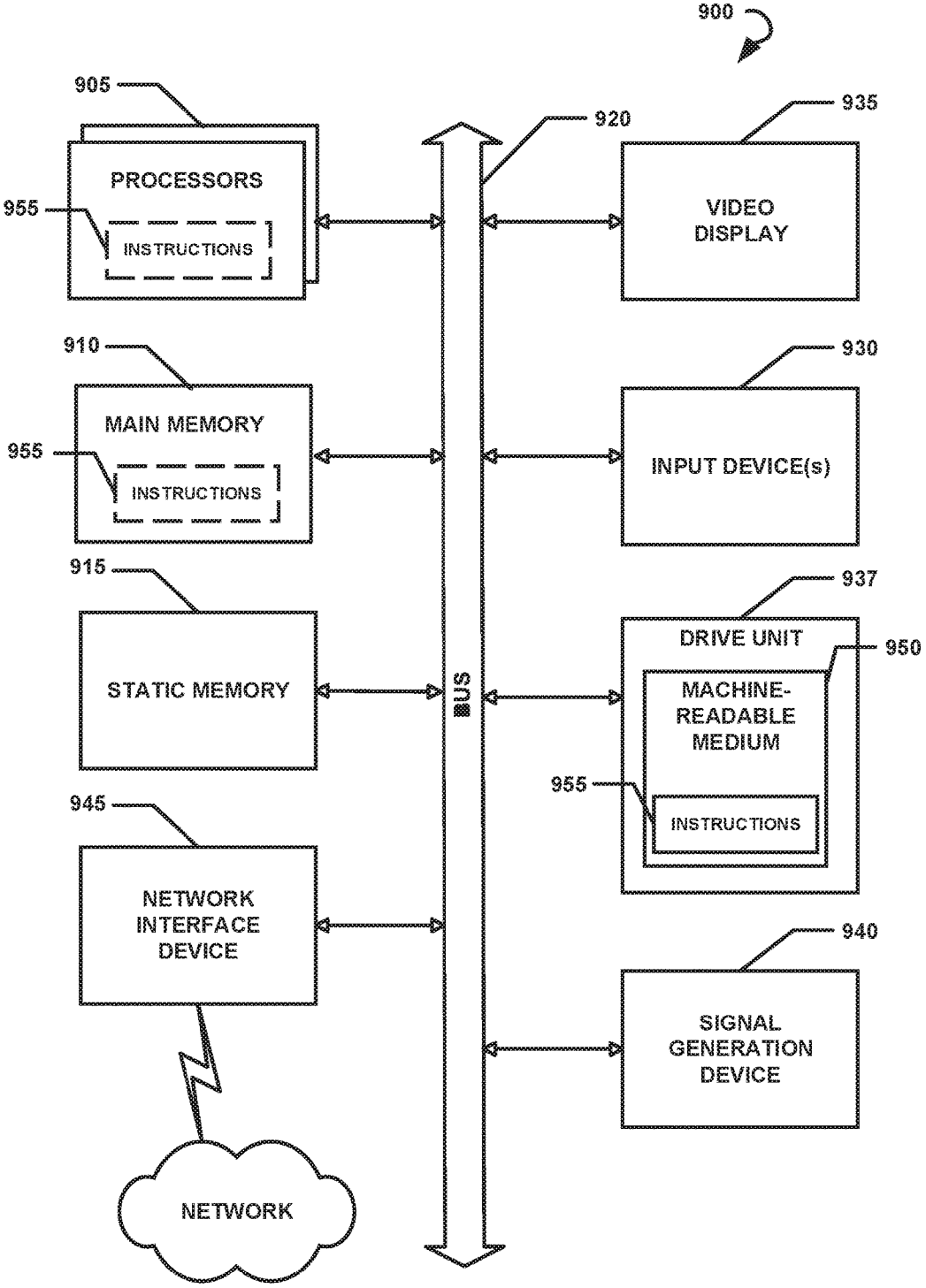
900
905
PROCESSORS
955
INSTRUCTIONS
920
935
VIDEO DISPLAY
910
MAIN MEMORY
955
INSTRUCTIONS
930
INPUT DEVICE(s)
915
STATIC MEMORY
BUS
937
DRIVE UNIT
950
MACHINE-READABLE MEDIUM
955
INSTRUCTIONS
945
NETWORK INTERFACE DEVICE
940
SIGNAL GENERATION DEVICE
NETWORK

Figure 18

FLOOR CLEANING MACHINES HAVING INTELLIGENT SYSTEMS, ASSOCIATED SUB-ASSEMBLIES INCORPORATING INTELLIGENT SYSTEMS, AND ASSOCIATED METHODS OF USE

CROSS-REFERENCE TO RELATED APPLICATIONS

This application claims the benefit of U.S. Provisional Application Ser. No. 61/969,559, filed Mar. 24, 2014, entitled "Floor Cleaning Machine Assemblies Having Intelligent Systems, Associated Sub-Assemblies Incorporating Intelligent Systems, And Associated Methods Of Use," which is hereby incorporated herein by reference in its entirety—including all references and appendices cited therein.

BACKGROUND OF THE INVENTION

1. Field of the Invention

The present invention relates in general to floor cleaning machines and, more particularly, to floor cleaning machines having intelligent systems that have the capacity to selectively gather, obtain, monitor, store, record, and analyze data associated with components of the floor cleaning machines and controllably communicate and disseminate such data with other systems and users. The present invention further relates to floor cleaning machine sub-assemblies including, but not limited to, secondary electrochemical cells having intelligent systems, as well as associated methods for using the same.

2. Background Art

Floor cleaning machines and associated systems have been known in the art for years and are the subject of a plurality of patents and/or publications, including: U.S. Pat. No. 8,584,294 entitled "Floor Cleaner Scrub Head Having a Movable Disc Scrub Member," U.S. Pat. No. 7,448,114 entitled "Floor Sweeping and Scrubbing Machine," U.S. Pat. No. 7,269,877 entitled "Floor Care Appliance with Network Connectivity," U.S. Pat. No. 7,199,711 entitled "Mobile Floor Cleaner Data Communication," U.S. Pat. No. 5,265,300 entitled "Floor Scrubber," U.S. Pat. No. 5,239,720 entitled "Mobile Surface Cleaning Machine," U.S. Pat. No. 5,093,955 entitled "Combined Sweeper and Scrubber," U.S. Pat. No. 4,831,684 entitled "Cleaning Vehicles," U.S. Pat. No. 4,819,676 entitled "Combination Sweeping and Scrubbing System and Method," U.S. Pat. No. 4,716,621 entitled "Floor and Bounded Surface Sweeper Machine," U.S. Pat. No. 4,667,364 entitled "Floor-Cleaning Machine," U.S. Pat. No. 4,580,313 entitled "Walk Behind Floor Maintenance Machine," and European Patent Number 2,628,427 A2 entitled "Suction Device with a Suction Device Transmitter and External Communication Device Thereof,"—all of which are hereby incorporated herein by reference in their entirety including all references cited therein.

U.S. Pat. No. 8,584,294 appears to disclose a scrub head that includes a first disc scrub member, a movable support having first and second positions, and a movable disc scrub member. The first disc scrub member is rotatable about a first vertical axis. The movable disc scrub member is rotatable about a second vertical axis and is connected to the movable support. The movable disc scrub member is configured to move relative to the first disc scrub member along first and second orthogonal axes of a horizontal plane, which is transverse to the first and second vertical axes, between first and second positions respectively corresponding to the first and second positions of the movable support.

U.S. Pat. No. 7,448,114 appears to disclose a hard floor sweeping and scrubbing machine which includes a mobile body comprising a frame supported on wheels for travel over a surface, a motorized cleaning head, a waste hopper, a hopper lift and a vacuum squeegee. The motorized cleaning head is attached to the mobile body and is configured to perform sweeping and scrubbing operations on the surface. The waste hopper is positioned on a rear side of the cleaning head and is configured to receive waste discharged from the cleaning head during the surface sweeping operations. The hopper lift is configured to raise the waste hopper from an operating position, in which the waste hopper is positioned adjacent the cleaning head, to a dumping position, in which the waste hopper is positioned to dump waste collected in the waste hopper. In one embodiment, the vacuum squeegee is attached to the hopper lift. Also disclosed is a method of cleaning a surface using embodiments of the machine.

U.S. Pat. No. 7,269,877 appears to disclose a floor care appliance that includes a microprocessor based control arrangement having a communications port for connection to a computer. Once connected to a computer, software updates for the microprocessor may be downloaded or diagnostic information stored in the microprocessor's memory may be uploaded for diagnostic purposes. In one embodiment of the invention, the communication port is configured to be connected to a local computer for possible further connection to a remote computer over a computer or telephone network. In an alternate embodiment of the invention, the communication port is configured to connect to and dial up a remote computer over a telephone network.

U.S. Pat. No. 7,199,711 appears to disclose a method of communicating data from a mobile floor cleaner to a remote receiver a data communication is initiated from a communicator of the mobile floor cleaner to the remote receiver and data is communicated to the remote receiver with the communicator.

U.S. Pat. No. 5,265,300 appears to disclose a floor scrubbing vehicle having scrub brushes mounted at the rear of the vehicle by a mechanism which allows both the brushes and squeegee to extend and retract transversely with respect to the vehicle. The mechanism is resilient, and allows the scrub brushes and squeegee to automatically retract inward upon contact with an immovable obstacle, and also causes automatic extension of the brushes and squeegee following passage of the obstacle. The scrub brushes and squeegee are mounted in a scrubbing pod frame which can rotate about a vertical axis with respect to the vehicle to prevent damage, or to facilitate access for repair and maintenance.

U.S. Pat. No. 5,239,720 appears to disclose a surface cleaning machine as a combination sweeping-scrubbing apparatus including a sweeping brush for sweeping debris into a hopper and a one piece squeegee for picking up solution after four staggered, disc brushes. The squeegee is U-shaped having a longitudinal extent greater than that of the disc brushes located intermediate the legs of the squeegee. The drive wheel is located in front of the disc brushes, the squeegee and the solution applying means. The squeegee is raised and lowered relative to the frame by an actuator which pivots an L-shaped member, the leg of which abuts against and pivots a lever interconnected to the mount or the squeegee by a turnbuckle. The hopper is raised and simultaneously tilted by a single cylinder which pivots the upper arm of a parallelogram including a lower arm. The hopper is pivotally mounted to an end of a hopper arm, the opposite end of which is pivotally mounted to the end of the upper

arm, and is further pivotally mounted to the end of the lower arm. The hopper is simultaneously tilted at a generally constant dump angle as the hopper is raised from a lowered position in a horizontal debris collecting condition to a raised position with the hopper in a dumping condition.

U.S. Pat. No. 5,093,955 appears to disclose a combination floor sweeping and scrubbing machine which is as compact and maneuverable as an equivalent machine which only sweeps or scrubs, while retaining typical hopper and tank volumes. Its operator can change it from sweeping to scrubbing or vice versa at any time by moving a few controls and without adding or removing any parts. It has one debris hopper and one horizontal cylindrical rotating brush and they function in both the sweeping and scrubbing modes. A vacuum system supplies dust control during sweeping and vacuum pickup of dirty solution during scrubbing. In the scrubbing mode a single tank supplies scrubbing solution and receives dirty solution picked up from the floor.

U.S. Pat. No. 4,831,684 appears to disclose a self-propelled sweeper vehicle that has front steerable wheels mounted on a centrally pivoted axle assembly which also carries the nozzle and brush gear whereby these assemblies are steered in unison with the vehicle. The nozzle front edge is convex and promotes non-turbulent air intake. The nozzle is formed as a hollow rotationally molded structure of a plastics material having inherent structural strength and stiffness. The brush gear is mounted on linkages comprising inner and outer portions pivotally connected for folding movement to resiliently yield under impact. The brush covers are formed as hollow plastics moldings and part of the brush support structure.

U.S. Pat. No. 4,819,676 appears to disclose a machine and/or system as well as a method of operation and an assembly whereby a sweeping unit may be quickly converted into a scrubbing unit and vice versa. The system is capable of operation either in a sweeping mode or a scrubbing mode and is also adaptable to include a vacuum wand assembly when the unit is to be operated in its sweeping mode.

U.S. Pat. No. 4,716,621 appears to disclose a sweeper machine for floors and bounded surfaces, e.g. the floors of workshops and warehouses, courtyards, having engaged with the machine frame, a removable container for collecting the swept trash supported by pivotally-mounted guides engaged by swivel members extending in a crosswise direction to the machine's longitudinal axis and cooperating to define a small frame intervening sealingly between a suction assembly in the frame and a suction mouth of the container, and with snap-action hook-up elements provided between the frame and the pivotally mounted guides and spring members projecting from the frame and acting by spring contact on the container.

U.S. Pat. No. 4,667,364 appears to disclose a floor cleaning machine which the fresh water and product dosing operation is controlled as a function of the operation of the driving motor such that the dosing per unit of floor area is maintained at an operator-controllable level. Improved economy of water, product and energy is achieved.

U.S. Pat. No. 4,580,313 appears to disclose a walk behind floor maintenance machine that includes a filter and filter housing that may be pivoted away to permit removal of the debris hopper. The filter may be cleaned by vibrating the filter and filter housing. Dust vibrated from the filter slides into the hopper. The hopper may be manually removed for emptying.

European Patent Number 2,628,427 A2 appears to disclose a device which has a suction motor and a dust collecting chamber arranged in a suction housing. A suction device-communication unit communicates with external communication units that form a component of a hand-held power tool. The external communication units are operated at a distance to the housing in connection with the tool. The suction device-communication unit includes a suction device transmitter for transmitting a control signal and/or a status signal to the external communication units. An independent claim is also included for an external communication unit for cooperation with a hand-held power tool.

While the above-identified patents and/or publications do appear to disclose various floor cleaning machines and associated systems, their configurations remain non-desirous, incompatible, and/or problematic inasmuch as, among other things, none of the above-identified floor cleaning machines and associated systems appear to include assemblies having intelligent systems that have the capacity to selectively gather, obtain, monitor, store, record, and analyze data associated with components of the floor cleaning machines and controllably communicate and disseminate such data with other systems and users. Furthermore, none of the above-identified floor cleaning machines and associated systems appear to utilize and/or be compatible with intelligent systems associated with secondary electrochemical cell sub-assemblies.

It is therefore an object of the present invention to provide floor cleaning machines having intelligent systems that have the capacity to selectively gather, obtain, monitor, store, record, and analyze data associated with components of the floor cleaning machines and controllably communicate and disseminate such data with other systems and users, as well as provide floor cleaning machines that are compatible with secondary electrochemical cells having intelligent systems associated therewith.

These and other objects of the present invention will become apparent in light of the present specification, claims, and appended drawings.

BRIEF DESCRIPTION OF THE DRAWINGS

Certain embodiments of the present invention are illustrated by the accompanying figures. It will be understood that the figures are not necessarily to scale and that details not necessary for an understanding of the invention or that render other details difficult to perceive may be omitted. It will be further understood that the invention is not necessarily limited to the particular embodiments illustrated herein.

The invention will now be described with reference to the drawings wherein:

FIG. **1** of the drawings is a front perspective view of a floor cleaning machine fabricated in accordance with the present invention;

FIG. **2** of the drawings is a rear perspective view of a floor cleaning machine fabricated in accordance with the present invention;

FIG. **3** of the drawings is a front perspective view of a floor cleaning machine fabricated in accordance with the present invention having an intelligent system integrated with a secondary electrochemical cell positioned within the solution tank sub-assembly;

FIG. **4** of the drawings is an exploded isometric view of a recovery tank sub-assembly fabricated in accordance with the present invention;

FIG. **5** of the drawings is an exploded isometric view of a vacuum fan sub-assembly fabricated in accordance with the present invention;

FIG. **6** of the drawings is an exploded isometric view of a solution tank sub-assembly fabricated in accordance with the present invention;

FIG. **7** of the drawings is an exploded isometric view of a solution flow sub-assembly fabricated in accordance with the present invention;

FIG. **8** of the drawings is an exploded isometric view of a control console sub-assembly fabricated in accordance with the present invention;

FIG. **9**A of the drawings is an exploded isometric view of a frame and wheel sub-assembly fabricated in accordance with the present invention;

FIG. **9**B of the drawings is an exploded isometric view of a frame and transaxle sub-assembly fabricated in accordance with the present invention;

FIG. **10** of the drawings is an exploded isometric view of a scrub head sub-assembly fabricated in accordance with the present invention;

FIG. **11** of the drawings is an exploded isometric view of a scrub head lift sub-assembly fabricated in accordance with the present invention;

FIG. **12** of the drawings is an exploded isometric view of a squeegee sub-assembly fabricated in accordance with the present invention;

FIG. **13**A of the drawings is a wiring diagram of a floor cleaning machine fabricated in accordance with the present invention using a frame and wheel sub-assembly;

FIG. **13**B of the drawings is a wiring diagram of another floor cleaning machine fabricated in accordance with the present invention using a frame and transaxle sub-assembly;

FIG. **14** of the drawings is a schematic of a circuit diagram of a floor cleaning machine fabricated in accordance with the present invention;

FIG. **15** of the drawings is an illustrative example of a network system of floor cleaning machines;

FIG. **16** of the drawings is a flow chart of a method in accordance with the present invention;

FIG. **17** of the drawings is a flow chart of another method in accordance with the present invention; and

FIG. **18** of the drawings is a diagrammatic representation of a machine in the form of a computer system.

SUMMARY OF THE INVENTION

The present invention is directed to, in one embodiment, a floor cleaning machine having an intelligent system comprising, consisting essentially of, and/or consisting of: (1) a recovery tank sub-assembly; (2) a vacuum fan sub-assembly; (3) a solution tank sub-assembly, wherein the solution tank sub-assembly preferably comprises a secondary electrochemical cell; (4) a solution flow sub-assembly; (5) a control console sub-assembly; (6) at least one of a frame and wheel sub-assembly and a frame and transaxle sub-assembly; (7) a scrub head sub-assembly; (8) a scrub head lift sub-assembly; (9) a squeegee sub-assembly; and (10) an intelligent system associated with at least one of the above-identified sub-assemblies, wherein the intelligent system at least one of selectively gathers, obtains, monitors, stores, records, and analyzes data associated with components of the floor cleaning machine assembly, and at least one of controllably communicates and disseminates such data with at least one of another system and user.

The present invention is also directed to, in one embodiment, a sub-assembly having an intelligent system for a floor cleaning machine, comprising, consisting essentially of, and/or consisting of: (1) a primary and/or secondary electrochemical cell; and (2) an intelligent system, wherein the intelligent system at least one of selectively gathers, obtains, monitors, stores, records, and analyzes data associated with components of the floor cleaning machine assembly, and at least one of controllably communicates and disseminates such data with at least one of another system and user.

The present invention is additionally directed to, in one embodiment, a method for using an intelligent system with a floor cleaning machine assembly comprising, consisting essentially of, and/or consisting of the steps of: (1) providing a floor cleaning machine assembly having an intelligent system; (2) selectively gathering, obtaining, monitoring, storing, recording, and/or analyzing data associated with components of the floor cleaning machine assembly; and (3) controllably communicating and/or disseminating data with at least one of another system and user.

DETAILED DESCRIPTION OF THE INVENTION

While this invention is susceptible of embodiment in many different forms, there is shown in the drawings and will be described herein in detail, one or more specific embodiments with the understanding that the present disclosure is to be considered as an exemplification of the principles of the invention and is not intended to limit the invention to the embodiments illustrated.

It will be understood that like or analogous elements and/or components, referred to herein, may be identified throughout the drawings with like reference characters.

It will be further understood that FIGS. **1-18** are merely representations and/or illustrations of floor cleaning machines and their associated sub-assemblies. As such, some of the components may be distorted from their actual scale for pictorial clarity and/or image enhancement.

Unless otherwise specified, the machines, sub-assemblies, components and/or parts provided herein below are commercially available from International Cleaning Equipment (ICE) (Guangdong, China) or a subsidiary thereof.

Referring now to the drawings, and to FIGS. **1-3** in particular, perspective views of floor cleaning machine **100** having an intelligent system are shown. Preferably, floor cleaning machine **100** comprises recovery tank sub-assembly **101** (FIG. **4**), vacuum fan sub-assembly **102** (FIG. **5**), solution tank sub-assembly **103** (FIG. **6**), solution flow sub-assembly **104** (FIG. **7**), control console sub-assembly **105** (FIG. **8**), frame and wheel sub-assembly **106** (FIG. **9**A) or frame and transaxle sub-assembly **107** (FIG. **9**B), scrub head sub-assembly **108** (FIG. **10**), scrub head lift sub-assembly **109** (FIG. **11**), squeegee sub-assembly **110** (FIG. **12**) and, as will be discussed in greater detail herein below, an intelligent system associated with one or more of the above-identified sub-assemblies, wherein the intelligent system selectively gathers, obtains, monitors, stores, records, and/or analyzes data associated with components of floor cleaning machine **100**, and controllably communicates and/or disseminates such data with another system and/or user.

Referring now to FIG. **4**, in a preferred embodiment of the present invention, recovery tank sub-assembly **101** generally forms the upper portion of the body of floor cleaning machine **100**. Recovery tank sub-assembly **101** preferably comprises recovery tank cover **2**, recovery tank cover seal **4**, float adapter **6**, shut-off float **8**, cap **10**, recovery tank housing or body **12** for containing recovered solution, dirt, and/or debris, drain hose **14**, hinge assembly **16** for releasable securement to solution tank sub-assembly **103**, and recovery tank support **18**.

As is also shown in FIG. **4**, recovery tank sub-assembly **101** utilizes a plurality of conventional bolts **20**, washers **22**, gaskets **24**, clamps **26**, cables **28**, brackets **30**, sleeves **32**, plates **34**, and screws **36** for assembly and use of recovery tank sub-assembly **101**.

Recovery tank sub-assembly **101** also preferably includes front indicia or logo **38** for product recognition and cup holder **40** for containing a cup, can, and/or bottle.

Referring now to FIG. **5**, in a preferred embodiment of the present invention, vacuum fan sub-assembly **102** is positioned generally proximate the bottom portion of recovery tank sub-assembly **101**. Vacuum fan sub-assembly **102** preferably comprises vacuum motor gasket **42**, vacuum motor **44** (e.g., two-stage 24V DC 500 W), vacuum motor muffler **46**, battery charger power cord **48**, optional on-board battery charger **50**, and charger cover **52**.

As is also shown in FIG. **5**, vacuum fan sub-assembly **102** utilizes a plurality of conventional bolts **20**, nuts **21**, washers **22**, studs **23**, knobs **25**, clamps **26**, ties **27** (e.g., nylon ties), brackets **30**, and screws **36** for assembly and use of vacuum fan sub-assembly **102**.

Referring now to FIG. **6**, in a preferred embodiment of the present invention, solution tank sub-assembly **103** generally forms the lower portion of the body floor cleaning machine **100**. Solution tank sub-assembly **103** preferably comprises down pressure lever bracket **54**, down pressure lever **56**, clean tubing **58**, solution tank **60**, battery connect cable assembly **62**, battery **64**, battery tray **66**, battery spacers **68**, battery connect cable **70**, battery terminal cover **72**, optional off-board battery charger **74**, filter assembly **76**, indicia/logo **38**, LED light **78**, LED light mounting base **80**, LED light cover **82**, seal member **84**, cover member **86**, battery connect cable assembly **88**, and solution fill cap **90**.

In accordance with the present invention, battery **64** preferably comprises a secondary electrochemical cell, such as a lead acid, NiCad, NiMH, and/or lithium-ion battery. Preferred examples of lithium-ion batteries include lithium cobalt oxide ($LiCoO_2$) batteries, lithium manganese oxide ($LiMn_2O_4$) batteries, lithium nickel manganese cobalt oxide ($LiNiMnCoO_2$) batteries, lithium iron phosphate (LiFePO) batteries, lithium nickel cobalt aluminum oxide ($LiNiCoAlO_2$) batteries, and lithium titanate ($Li_4Ti_5O_{12}$) batteries. In one embodiment each battery **64** comprises an anode, a cathode, and an electrolyte, wherein at least one of the anode, cathode, and electrolyte are monitored by the intelligent system of the floor cleaning machine's intelligent system. Such monitoring comprises evaluating the structural integrity of the anode, the cathode, and/or the electrolyte, and/or the cycle life of each component—including electrolyte level.

As is also shown in FIG. **6**, solution tank sub-assembly **103** utilizes a plurality of conventional bolts **20**, nuts **21**, washers **22**, clamps **26**, bushings **29**, plates/brackets **30**, thrust bearings **31**, sleeves **32**, springs **33**, spring retainers **35**, screws **36**, spring links **37**, indicia/logos/labels **38**, netting **39**, ball valves **41**, straps **43**, and elbows **45** for assembly and use of solution tank sub-assembly **103**.

Referring now to FIG. **7**, in a preferred embodiment of the present invention, solution flow sub-assembly **104** is positioned generally proximate the lower portion of solution tank sub-assembly **103**. Solution flow sub-assembly **104** preferably comprises elbows **45**, ball valve **41**, clamps **26**, tubing **91**, filter assembly **76** from solution tank sub-assembly **103** (filter assembly **76** includes filter assembly base **92**, filter screen **93**, o-ring **94**, and cap **95**), washers **22**, solenoid valve **96** (e.g., 24V DC), screws **36**, and water supply tube **97**.

Referring now to FIG. **8**, in a preferred embodiment of the present invention, control console sub-assembly **105** generally forms the back or rear portion of floor cleaning machine **100**. Control console sub-assembly **105** preferably comprises control console housing **120**, PCB assembly **122**, timer **124**, key switch **126**, control panel **128**, circuit breaker **130**, circuit breaker mounting plate **132**, connector **134**, baffle **136**, squeegee lifting handle **138**, micro-switch **140**, actuator **142**, shaft **144**, bail lever **146**, control console rear plate **148**, solenoid switch **150**, and relay **152**.

As is also shown in FIG. **8**, control console sub-assembly **105** utilizes a plurality of conventional bolts **20**, nuts **21**, washers **22**, knobs **25**, clamps **26**, cables **28**, brackets **30**, sleeves **32**, springs **33**, plates **34**, screws **36**, indicia/logos/labels **38**, gaskets **47**, spacers **49**, and stand-offs **51** for assembly and use of control console sub-assembly **105**.

Referring now to FIG. **9**A, in a preferred embodiment of the present invention, frame and wheel sub-assembly **106** (i.e., non-motor driven) generally comprises main frame **154**, pedal locking bracket **156**, squeegee lift bracket **158**, squeegee mounting bracket **160**, wheel cover **162**, wheel **164**, axle mounting adapter **166**, axle grommet **168**, wheel axle **170**, caster **172**, micro switch cap **174**, micro switch **176**, and solenoid valve **178** (e.g., 24V DC).

As is also shown in FIG. **9**A, frame and wheel sub-assembly **106** utilizes a plurality of conventional bolts **20**, nuts **21**, washers **22**, brackets **30**, sleeves **32**, springs **33**, plates **34**, screws **36**, cotters **53**, pins **55**, ball joints **57**, journal bearing **59** for assembly and use of control frame and wheel sub-assembly **106**.

Referring now to FIG. **9**B, in a preferred embodiment of the present invention, frame and transaxle sub-assembly **107** (i.e., motor driven) generally comprises the same components as frame and wheel sub-assembly **106** (FIG. **9**A) except for retaining ring **65**, main frame **180** and motor/transaxle **182**.

Referring now to FIG. **10**, in a preferred embodiment of the present invention, scrub head sub-assembly **108** generally comprises brush motor **184** (e.g., 24V DC 1.0 hp), key **186**, water supply tube **188**, scrub head housing **190**, scrub head bumper **192**, drive hub **194**, brush clamp plate **196**, pad driver **198**, big mouth **200**, brush **202**, and protective wheel **204**.

As is also shown in FIG. **10**, scrub head sub-assembly **108** utilizes a plurality of conventional bolts **20**, nuts **21**, washers **22**, studs **23**, knobs **25**, sleeves **32**, springs **33**, screws **36**, indicia/labels **38**, spacers **49**, pins **55**, and spring clips **61** for assembly and use of control frame and wheel sub-assembly **106**.

Referring now to FIG. **11**, in a preferred embodiment of the present invention, scrub head lift sub-assembly **109** generally comprises non-slip mat **206**, scrub head lift bracket **208**, left bracket **210**, right bracket **212**, and guide bracket **214**.

As is also shown in FIG. **11**, scrub head lift sub-assembly **109** utilizes a plurality of conventional bolts **20**, nuts **21**, washers **22**, brackets **30**, springs **33**, plates **34**, screws **36**, journal bearing **59**, and roller **63** for assembly and use of control frame and wheel sub-assembly **106**.

Referring now to FIG. **12**, in a preferred embodiment of the present invention, squeegee sub-assembly **110** generally comprises protective wheel **216**, right bracket **218**, caster **220**, squeegee clamp assembly **222**, rear squeegee blade **224**, squeegee housing **226**, squeegee retainer **228**, front squeegee blade **230**, short clamp assembly **232**, left bracket **234**, vacuum hose holder **236**, and vacuum hose **238**.

As is also shown in FIG. **12**, squeegee sub-assembly **110** utilizes a plurality of conventional bolts **20**, nuts **21**, washers **22**, knobs **25**, screws **36**, and journal bearings **59** for assembly and use of squeegee sub-assembly **110**.

Referring now to FIGS. **13**A-B, wiring diagrams for floor cleaning machine **100** are provided. FIG. **13**A discloses a floor cleaning machine having frame and wheel sub-assembly **106**. FIG. **13**B of the drawings discloses a floor cleaning machine having frame and transaxle sub-assembly **107**.

In another embodiment of the present invention, a sub-assembly having an intelligent system for a floor cleaning machine is provided and generally comprises a primary and/or secondary electrochemical cell, and an intelligent system, wherein the intelligent system at least one of selectively gathers, obtains, monitors, stores, records, and analyzes data associated with components of the floor cleaning machine assembly, and at least one of controllably communicates and disseminates such data with at least one of another system and user.

In accordance with the present invention, a method for using an intelligent system with a floor cleaning machine assembly is provided and generally, comprises the following steps: (1) providing a floor cleaning machine assembly having an intelligent system; (2) selectively gathering, obtaining, monitoring, storing, recording, and/or analyzing data associated with components of the floor cleaning machine assembly; and (3) controllably communicating and/or disseminating data with at least one of another system and user. In particular and as is collectively shown in FIGS. **1-18**, an intelligent system enables a floor cleaning machine assembly to transmit data obtained from the floor cleaning machine assembly to, for example, a storage or data server, which, in turn, transmits selected data to, for example, an end user via email and/or text messaging.

FIG. **14** is a schematic diagram of an example circuit diagram **500** of a floor cleaning machine assembly of the present technology. Generally, the circuit diagram **500** includes a battery interface **502**, a charger interface **504**, a main power key switch **506**, an hour meter **508**, a brush motor solenoid switch **510**, a solution solenoid valve switch **512**, safety switch **514**, a vacuum motor relay **516**, a printed circuit board (PCB) **518** (e.g., controller), an emergency stop switch **520**, a pair of LED interfaces **522**, a speed potentiometer **524**, a forward control handle bail switch **526**, a backward control handle bail switch **528**, a speed control board **530**, a transaxle motor interface **532**, a brush motor interface **534**, and a vacuum motor interface **536**.

The PCB **518** (e.g., controller) functions as a main controller board for controlling and communicating with various components of the floor cleaning machine assembly. In some embodiments, the PCB **518** can include one or more features of an example computing machine illustrated and described with respect to FIG. **18**. The PCB **518** includes at least a processor and a memory for storing executable instructions. The processor can execute the instructions to provide any of the data sensing, gathering, processing, transforming, and/or communication features described herein.

It will be understood that the PCB **518** can be referred to generally as an intelligent system or component that is configured to provide data gathering, recording, logging, transmitting, and analysis functionalities. In other embodiments, an intelligent system can include the PCB **518** that cooperates with a management server, where the PCB **518** gathers and collects operational data for the floor cleaning machine assembly and the management server performs data analysis functionalities on the operational data. In yet other embodiments, an intelligent system can include the PCB **518** that is configured to remotely activate/deactivate (e.g., turn on and off) floor cleaning machine **100** via, for example power key switch **506** or other circuit implantation.

Generally, the PCB **518** is communicatively coupled to each of the other components of the circuit described above, either directly or indirectly. For example, the PCB **518** directly communicates with the batteries of the floor cleaning machine assembly, through the battery interface **502**, while the PCB **518** indirectly couples with the transaxle motor interface **532** through the speed control board **530**.

The battery interface **502** allows for the PCB **518** to communicate with the Ion batteries to receive feedback including charge level, average usage and current draw, as well as other battery related metrics.

The charger interface **504** allows the PCB **518** to determine charging metrics such as average charging times.

The main power key switch **506** is controlled by the PCB **518** to allow the floor cleaning machine assembly to be turned on and off. Key metrics around the main power key switch **506** can include start and stop times. The PCB **518** can time stamp each operation such as device on and device off instances and record these metrics for statistical or reporting purposes. Other statistics could include time duration between device on and device off operations, which indicate duration of usage for the floor cleaning machine assembly.

The hour meter switch **508** is controlled by the PCB **518** to calculate hours of operation for the floor cleaning machine assembly, in some embodiments.

The brush motor solenoid switch **510** can be controlled by the PCB **518** to selectively control engagement or disengagement of the brush motor **184** of the floor cleaning machine assembly. The PCB **518** can track brush motor usage time by measuring engagement and disengagement of the brush motor **184**. These statistics can be compared against device on and device off periods to determine how long the brush is engaged compared to the overall time frame of device on periods. By way of example, the PCB **518** can measure that the device is in a device on state for two hours, but the brush motor was only in use for 15 minutes.

The solution solenoid valve switch **512** can be utilized to control dispensing of solution through a solution dispenser. The PCB **518** can track solution dispensing events, which can be used to calculate metrics around solution utilization.

The safety switch **514** can be controlled with the PCB **518**, for example, to lift a scrub head from contact with the floor. In some embodiments, when the PCB **518** activates the safety switch **514**, the brush motor solenoid switch **510** can be controlled to disengage the brush motor **184**. Other safety related operations can also likewise be accomplished using the safety switch **514**.

The vacuum motor relay **516** can be utilized by the PCB **518** to control operation of the vacuum motor **44** of the floor cleaning machine assembly.

The emergency control switch **520** is controlled by the PCB **518** to control operation of an emergency switch of the floor cleaning machine assembly. A user can stop operation of the floor cleaning machine assembly by actuating the emergency switch. Actuation of the emergency switch is sensed by the PCB **518**, causing the PCB **518** to selectively stop the brush motor **184** and the transaxle **182**.

In one embodiment, the emergency control switch **520** can be used to selectively disrupt power provided to the speed control board **530**. That is, the speed control board **530**

is configured to control operation of the transaxle motor, by way of the transaxle motor interface **532**.

A pair of LED interfaces **522** can be used by the PCB **518** to selectively control operation of LED lights that indicate operational statuses of the device **100**, such as forward, backward, power on, and so forth.

The speed potentiometer **524** is controlled by the speed control board **530** to sense input from a user that can be used to vary the speed of the device. For example, the speed potentiometer **524** can receive a speed indication from a user. The speed indication is received by the PCB **518** from input into the speed potentiometer **524**. This input is then translated into rotational speed of the transaxle motor through the transaxle motor interface **532**.

The forward control handle bail switch **526** provides forward movement of the floor cleaning machine assembly. In some embodiments, the speed control board **504** utilizes the backward control handle bail switch **528** to provide backward movement of the floor cleaning machine assembly.

In response to signals through the forward control handle bail switch **526** and/or signals through the backward control handle bail switch **528**, the transaxle motor interface **532** can be used by the speed control board **530** to selectively control the operation of the transaxle motor. For example, the speed control board **530** can selectively control the forward and/or backward rotation of the transaxle motor.

As with the PCB **518**, the speed control board **530** can include one or more of the components of the computing machine of FIG. **18**, such as a processor and memory. To be sure, the memory is configured with executable instructions that allow the processor to perform any of the functional or process related steps described herein.

Additionally, the PCB **518** can be configured to sense and collect the operational information of the speed control board **530** as the speed control board **530** controls the transaxle motor interface **532**. For example, the PCB **518** can determine operational speeds for the transaxle motor, usage times, and so forth.

The PCB **518** can also control the brush motor **184** and vacuum motor **44**, through their respective interfaces, such as brush motor interface **534** and vacuum motor interface **536**. As with other components, the PCB **518** can be configured to sense and collect operational details of these devices.

In some embodiments, the PCB **518** communicates within an intelligent system **600**, illustrated in greater detail in FIG. **15**. The PCB **518** can include any wired or wireless means of communication such as a wireless communications interface. The wireless communications interface can utilize any protocol for network communication including short range protocols such as Bluetooth, near field communications (NFC), infra-red, and so forth. The wireless communications interface can also include utilize Wi-Fi, a cellular network, or other similar networks using other protocols.

FIG. **15** illustrates an example network system of devices. The networked system **600** comprises a plurality of devices **605**, **610**, and **615**, which can all communicatively couple with a management server **620** over a network **625**.

Each of the plurality of devices **605-615** can be collocated in the same facility, such as a building, factory, school, or other location. In other embodiments, one or more (or all) plurality of devices **605-615** can be remotely located from one another.

Each of the plurality of devices **605-615** can gather and report its operational metrics to the management server **620** over the network **625**, as will be discussed in greater detail below.

Exemplary networks, such as network **625** may include any one or more of, for instance, a local intranet, a PAN (Personal Area Network), a LAN (Local Area Network), a WAN (Wide Area Network), a MAN (Metropolitan Area Network), a virtual private network (VPN), a storage area network (SAN), a frame relay connection, an Advanced Intelligent Network (AIN) connection, a synchronous optical network (SONET) connection, a digital T1, T3, E1 or E3 line, Digital Data Service (DDS) connection, DSL (Digital Subscriber Line) connection, an Ethernet connection, an ISDN (Integrated Services Digital Network) line, a dial-up port such as a V.90, V.34 or V.34bis analog modem connection, a cable modem, an ATM (Asynchronous Transfer Mode) connection, or an FDDI (Fiber Distributed Data Interface) or CDDI (Copper Distributed Data Interface) connection. Furthermore, communications may also include links to any of a variety of wireless networks, including 4GLTE (Long Term Evolution), 3GPP (3G Radio Access Network), WAP (Wireless Application Protocol), GPRS (General Packet Radio Service), GSM (Global System for Mobile Communication), CDMA (Code Division Multiple Access) or TDMA (Time Division Multiple Access), cellular phone networks, GPS (Global Positioning System), CDPD (cellular digital packet data), RIM (Research in Motion, Limited) duplex paging network, Bluetooth radio, or an IEEE 802.11-based radio frequency network. The network **620** can further include or interface with any one or more of an RS-232 serial connection, an IEEE-1394 (Fire wire) connection, a Fiber Channel connection, an IrDA (infrared) port, a SCSI (Small Computer Systems Interface) connection, a USB (Universal Serial Bus) connection or other wired or wireless, digital or analog interface or connection, mesh or Digi® networking.

The management server **620** is preferably implemented in a cloud-computing environment. In general, a cloud-based computing environment is a resource that typically combines the computational power of a large grouping of processors and/or that combines the storage capacity of a large grouping of computer memories or storage devices. For example, systems that provide a cloud resource may be utilized exclusively by their owners, such as Google™ or Yahoo!™; or such systems may be accessible to outside users who deploy applications within the computing infrastructure to obtain the benefit of large computational or storage resources. The cloud may be formed, for example, by a network of web servers, with each web server (or at least a plurality thereof) providing processor and/or storage resources. These servers may manage workloads provided by multiple users (e.g., cloud resource customers or other users). Typically, each user places workload demands upon the cloud that vary in real-time, sometimes dramatically. The nature and extent of these variations typically depend on the type of business associated with the user.

In operation, each of the plurality of devices **605-615** can communicate with the management server **620**, with each of the plurality of devices **605-615** acting as a node within the network. The management server **620** can track metrics about each of the plurality of devices **605-615** by communicating with the PCB on each of the plurality of devices **605-615**.

In some embodiments, data obtained by the PCB of each of the plurality of devices **605-615** is selectively gathered, obtained, monitored, stored, recorded, and/or analyzed by the management system **620**.

According to some embodiments, data that is selectively gathered, obtained, monitored, stored, recorded, and/or analyzed, preferably comprises, for example, working time, current, voltage, power, and so forth from, for example, the vacuum motor, lithium-ion battery, transaxle, brush deck motor, and other components of the floor cleaning machine assembly. This data or information is preferably received at the PCB **518** (FIG. **14**) associated with the lithium-ion battery positioned in the floor cleaning machine **100**. That is, the PCB **518** controls the operations of each of the components of the device. As described above, the operational data for each of these components can be captured and logged by the PCB **518** and stored in memory on the PCB **518**. In other embodiments, operational data can be stored in memory on the PCB **518** and transmitted asynchronously in batches (according to memory size) to the management server **620**. In some embodiments, the operational data can be streamed from the PCB **518** to the management server **620** synchronously.

Each device can be managed by assignment of a device ID by the management system. The device ID can be an assigned number, a SIM card number, an IMEI, a MAC address, an IP address, or other similar unique identifier. The device ID can be appended to each communication transmitted by the PCB **518** to the management server **620**.

Stored data or information is preferably analyzed by the management server **620** for parameter compliance, and if, necessary such data or information is then communicated to, for example, an end user, servicing personal, and/or owner. For example, the owner of a floor cleaning machine assembly can set a threshold of hours of operation for the device that are required per week. If the floor cleaning machine assembly is not operated for a period of time that meets or exceeds this threshold, the floor cleaning machine assembly is identified by the management system **620**.

The transfer of data with regard to each individual machine will help end users better plan for number of machines and employees at each individual work site. Companies with sizeable cleaning staff, (e.g., contact cleaning companies) will find it relevant and useful.

In one embodiment the data or information with regard to usage of each individual machine is collected and transmitted daily at a specific time to, for example, the management server. This will allow end users, as well as, distributors and dealers to access the information that they need, so as to monitor usage of these machines and allow them to extract maximum efficiency during operations. In another embodiment of the present invention, other than information for individual days, cumulative totals and averages are readily available too, and the information is preferably updated through the lifespan of the floor cleaning machine assembly. Examples of data or information uploaded on a daily basis include, for example, the number of hours and specific time the machine was in operation during the previous 24 hours, the monthly total hours for machine usage, and the total hours of machine usage. Furthermore, the present invention enables recording and analysis of an accumulation total for working parts like batteries, vacuum motors, transaxles and brush motors. Since each component has a lifespan, it will help distributors, dealers, and owners selectively monitor the exact time when these components (e.g., vacuum motor, brush motor and batteries) need to be changed instead of waiting for them to break down, which will affect the working efficiency of the end users. Another important advantage of having this data or information transfer is that in the event the machine breaks down, (e.g., the vacuum motor, brush motor, etcetera stops working), what has broken down will be selectively transmitted to the appropriate servicing personnel by email and/or cell phone text messaging that is/are responsible for the repairs and maintenance of the machines, management of the end user, and so forth.

FIG. **16** is a flowchart of an example method of the present technology. The method includes obtaining **702** operational data for a floor cleaning machine assembly, the operational data being generated for any of a battery, a vacuum motor, a transaxle, and a brush motor of the floor cleaning machine assembly.

As mentioned above, this operational data can be gathered by a PCB (such as PCB **518** of FIG. **5**) during operation of the floor cleaning machine assembly.

The method also comprises communicatively coupling **704** a floor cleaning machine assembly with a management server. As mentioned above, this could comprise a wireless communication module of the PCB **518** coupling with the management server over a network connection.

Once the floor cleaning machine assembly and the management server are communicatively coupled with one another, the method can further comprise the management server querying **706** the floor cleaning machine assembly for operational data for any of the battery, vacuum motor, transaxle, and brush motor. For example, the management server can request battery related operational data from the floor cleaning machine assembly. As mentioned above, this operational data can be stored on the floor cleaning machine assembly in memory of the PCB. In another example, the management server can request operational data for the vacuum and brush motors.

In another embodiment, the PCB can upload all operational data gathered since a last communication session with the management server. This operational data can include operational data for each of the battery, vacuum motor, transaxle, and brush motor.

In some embodiments, the management server is performing **708** at least one operational data analysis process on the obtained operational data.

Examples of operational data analysis include in one example, comparing the operational time frames for the floor cleaning machine assembly to an expected operational time frame. For example, the owner of a building will determine an operational time frame that the floor cleaning machine assembly should be utilized for. This operational time frame can be calculated from an expected time based on building square footage, or any other quantifiable metric that can be used to set an operational time frame threshold. Once this threshold is established, the management server can compare the actual operational time frame utilized over a given period of time to the operational time frame threshold. If the actual time does not meet or exceed the operational time frame threshold, the management server can alert the owner.

Thus, in some embodiments, the method includes transmitting **710** an alert message to an owner of the floor cleaning machine assembly if the operational analysis indicates that a threshold violating event has occurred. To be sure, a threshold violating event is any event in which operational data for one or more components of the floor cleaning machine assembly do not appropriately compare with an operational threshold.

In another example, an operational threshold could include a minimum charging time frame for the floor cleaning machine assembly. If the floor cleaning machine assembly is not charged for an appropriate amount of time, the battery operation of the floor cleaning machine assembly can be compromised.

In another example, an operational threshold can be set for the brush motor, which can include a comparison with another operational metric such as total operational time. Assume that the total operational time (e.g., power on to power off) for the floor cleaning machine assembly is one hour, but the brush motor is only operational for fifteen minutes of the one hour, it can be deduced that the floor cleaning machine assembly was not in actual use for the entire hour.

Additional metrics can be gathered by tracking revolutions of the transaxle, which can be extrapolated into square foot coverage of the floor cleaning machine assembly. Ideally, transaxle revolutions should be compared to overall operational time to ensure that the floor cleaning machine assembly is moving during power on periods. If the floor cleaning machine assembly is left on when no work is being accomplished, this can lead to unnecessary battery usage.

Knowledge of the approximate square footage of a cleaning area can also be used to determine if the floor cleaning machine assembly is being utilized properly. For example, if by counting transaxle revolutions that the floor cleaning machine assembly has only cleaned approximately 400 square feet, when the total expected square footage for the cleaning area is 2,000 square feet, the management server can detect this discrepancy and transmit an alert message to the owner or another interested party.

FIG. **17** is another flowchart of an example method of the present technology. The method includes a step of detecting **802** a failure of a component of a floor cleaning machine assembly during operation of the detecting **802** a failure of a component of a floor cleaning machine assembly during operation or startup of the floor cleaning machine assembly. For example, the PCB can maintain a set of operational thresholds for each component of the floor cleaning machine assembly such as the battery, vacuum motor, transaxle, and brush motor. Whenever any of these components is operating below this expected operational threshold, the failure can be established.

Upon detection of a failure, the method includes the PCB establishing **804** communication with a management server, as well as a step of transmitting **806** a fault message to the management server. The fault message can include an indication as to the component that failed, such as a battery, vacuum motor, transaxle, and brush motor.

If the failure involves a component of the floor cleaning machine assembly that could cause the floor cleaning machine assembly to be a safety hazard, the method can include the floor cleaning machine assembly receiving **808** an emergency shut down signal from the management server. The method also includes performing **810** an emergency shut down upon receiving the emergency shut down signal from the management server. Examples of emergency shut down procedures are described in greater detail supra.

In one embodiment, the method includes an optional step of automatically ordering **812** a replacement part for identified failed component. The floor cleaning machine assembly can communicate directly with a third party system over the network to order the replacement part. In another embodiment, the management server can identify the failed component and perform a lookup of the manufacturer of the failed component and forward the request to the third party system or a local inventory system. The management server can order the part automatically as the fault message is received. In another example, a replacement component in inventory can be identified and identified in a repair ticket that is transmitted to a repair technician.

In some embodiments, the present invention enables upgrades to the software that end users are using that may address, for example, compatibility issues, or other necessary upgrades. In one embodiment, the management server can push updates to the floor cleaning machine assembly during operational data transfer operations, or upon powering up the floor cleaning machine assembly. For example, each time the floor cleaning machine assembly is powered on, the PCB can link with the management server and query the management server for updates. This can all occur transparently to the end user, unless a short pause in operation of the floor cleaning machine assembly is required to implement the update or for safety reasons.

FIG. **18** is a diagrammatic representation of an example machine in the form of a computer system **900**, within which a set of instructions for causing the machine to perform any one or more of the methodologies discussed herein may be executed. In various example embodiments, the machine operates as a standalone device or may be connected (e.g., networked) to other machines. In a networked deployment, the machine may operate in the capacity of a server or a client machine in a server-client network environment, or as a peer machine in a peer-to-peer (or distributed) network environment. The machine may be a personal computer (PC), a tablet PC, a set-top box (STB), a personal digital assistant (PDA), a cellular telephone, a portable music player (e.g., a portable hard drive audio device such as an Moving Picture Experts Group Audio Layer 3 (MP3) player), a web appliance, a network router, switch or bridge, or any machine capable of executing a set of instructions (sequential or otherwise) that specify actions to be taken by that machine. Further, while only a single machine is illustrated, the term "machine" shall also be taken to include any collection of machines that individually or jointly execute a set (or multiple sets) of instructions to perform any one or more of the methodologies discussed herein.

The example computer system **900** includes a processor or multiple processors **905** (e.g., a central processing unit (CPU), a graphics processing unit (GPU), or both), and a main memory **910** and static memory **915**, which communicate with each other via a bus **920**. The computer system **900** may further include a video display **935** (e.g., a liquid crystal display (LCD)). The computer system **900** may also include an alpha-numeric input device(s) **930** (e.g., a keyboard), a cursor control device (e.g., a mouse), a voice recognition or biometric verification unit (not shown), a drive unit **937** (also referred to as disk drive unit), a signal generation device **940** (e.g., a speaker), and a network interface device **945**. The computer system **900** may further include a data encryption module (not shown) to encrypt data.

The disk drive unit **937** includes a computer or machine-readable medium **950** on which is stored one or more sets of instructions and data structures (e.g., instructions **955**) embodying or utilizing any one or more of the methodologies or functions described herein. The instructions **955** may also reside, completely or at least partially, within the main memory **10** and/or within the processors **905** during execution thereof by the computer system **900**. The main memory **910** and the processors **905** may also constitute machine-readable media.

The instructions **955** may further be transmitted or received over a network via the network interface device **945** utilizing any one of a number of well-known transfer protocols (e.g., Hyper Text Transfer Protocol (HTTP)). While the machine-readable medium **950** is shown in an example embodiment to be a single medium, the term "computer-readable medium" should be taken to include a single medium or multiple media (e.g., a centralized or distributed database and/or associated caches and servers) that store the one or more sets of instructions. The term "computer-readable medium" shall also be taken to include any medium that is capable of storing, encoding, or carrying a set of instructions for execution by the machine and that causes the machine to perform any one or more of the methodologies of the present application, or that is capable of storing, encoding, or carrying data structures utilized by or associated with such a set of instructions. The term "computer-readable medium" shall accordingly be taken to include, but not be limited to, solid-state memories, optical and magnetic media, and carrier wave signals. Such media may also include, without limitation, hard disks, floppy disks, flash memory cards, digital video disks, random access memory (RAM), read only memory (ROM), and the like. The example embodiments described herein may be implemented in an operating environment comprising software installed on a computer, in hardware, or in a combination of software and hardware.

One skilled in the art will recognize that the Internet service may be configured to provide Internet access to one or more computing devices that are coupled to the Internet service, and that the computing devices may include one or more processors, buses, memory devices, display devices, input/output devices, and the like. Furthermore, those skilled in the art may appreciate that the Internet service may be coupled to one or more databases, repositories, servers, and the like, which may be utilized in order to implement any of the embodiments of the disclosure as described herein.

The corresponding structures, materials, acts, and equivalents of all means or step plus function elements in the claims below are intended to include any structure, material, or act for performing the function in combination with other claimed elements as specifically claimed. The description of the present technology has been presented for purposes of illustration and description, but is not intended to be exhaustive or limited to the present technology in the form disclosed. Many modifications and variations will be apparent to those of ordinary skill in the art without departing from the scope and spirit of the present technology. Exemplary embodiments were chosen and described in order to best explain the principles of the present technology and its practical application, and to enable others of ordinary skill in the art to understand the present technology for various embodiments with various modifications as are suited to the particular use contemplated.

Aspects of the present technology are described above with reference to flowchart illustrations and/or block diagrams of methods, apparatus (systems) and computer program products according to embodiments of the present technology. It will be understood that each block of the flowchart illustrations and/or block diagrams, and combinations of blocks in the flowchart illustrations and/or block diagrams, can be implemented by computer program instructions. These computer program instructions may be provided to a processor of a general purpose computer, special purpose computer, or other programmable data processing apparatus to produce a machine, such that the instructions, which execute via the processor of the computer or other programmable data processing apparatus, create means for implementing the functions/acts specified in the flowchart and/or block diagram block or blocks.

The foregoing description merely explains and illustrates the invention and the invention is not limited thereto except insofar as the appended claims are so limited, as those skilled in the art who have the disclosure before them will be able to make modifications without departing from the scope of the invention.

What is claimed and desired to be secured by Letters Patent of the United States is:

1. A floor cleaning machine having an intelligent system, comprising:

a recovery tank sub-assembly; a vacuum fan sub-assembly; a solution tank sub-assembly, wherein a secondary electrochemical cell is positioned within the solution tank sub-assembly, and further wherein the secondary electrochemical cell is positioned adjacent to a reservoir of the solution tank sub-assembly; a solution flow sub-assembly, wherein the solution flow sub-assembly is positioned proximate a lower portion of the solution tank sub-assembly; a control console sub-assembly; at least one of a frame and wheel sub-assembly and a frame and transaxle sub-assembly; a scrub head sub-assembly; a scrub head lift sub-assembly; a squeegee sub-assembly; and an intelligent system comprising the secondary electrochemical cell in electrical communication with a controller that is configured to at least one of selectively gather, obtain, monitor, store, and record data associated with components of the floor cleaning machine, and wherein the controller communicatively couples the floor cleaning machine with a management server over a network and transmits data to the management server for analysis.

2. A sub-assembly having an intelligent system for a floor cleaning machine, comprising: a secondary electrochemical cell; and an intelligent system, wherein the intelligent system comprises a secondary electrochemical cell in electrical communication with a controller, and wherein the controller is configured to at least one of selectively gather, obtain, monitor, store, and record data associated with components of the floor cleaning machine, and wherein the controller communicatively couples the floor cleaning machine with a management server over a network and transmits data to the management server for analysis.

3. A floor cleaning machine having an intelligent system, comprising:

a recovery tank sub-assembly; a vacuum fan sub-assembly; a solution tank sub-assembly, wherein a secondary electrochemical cell is positioned within the solution tank sub-assembly, and further wherein the secondary electrochemical cell is positioned adjacent to a reservoir of the solution tank sub-assembly; a solution flow sub-assembly, wherein the solution flow sub-assembly is positioned proximate a lower portion of the solution tank sub-assembly; a control console sub-assembly; at least one of a frame and wheel sub-assembly and a frame and transaxle sub-assembly; a scrub head sub-assembly; a scrub head lift sub-assembly; a squeegee sub-assembly; and an intelligent system integrated with the secondary electrochemical cell, wherein the secondary electrochemical cell is in electrical communication with a controller that is configured to selectively gather, obtain, monitor, store, and record data associated with components of the floor cleaning machine, and wherein the controller communicatively couples

the floor cleaning machine with a management server over a network and transmits data to the management server for analysis.

4. The floor cleaning machine according to claim **1**, wherein the secondary electrochemical cell comprises an anode.

5. The floor cleaning machine according to claim **1**, wherein the secondary electrochemical cell comprises a cathode.

6. The floor cleaning machine according to claim **1**, wherein the secondary electrochemical cell comprises an electrolyte.

7. The floor cleaning machine according to claim **1**, wherein the secondary electrochemical cell comprises an anode, a cathode, and an electrolyte.

8. The floor cleaning machine according to claim **7**, wherein at least one of the anode, cathode, and electrolyte are monitored by the intelligent system.

9. The floor cleaning machine according to claim **7**, wherein the anode, cathode, and electrolyte are monitored by the intelligent system.

10. The floor cleaning machine according to claim **7**, wherein the structural integrity of the anode and the cathode are monitored by the intelligent system.

11. The floor cleaning machine according to claim **7**, wherein the electrolyte level of the electrolyte is monitored by the intelligent system.

12. The sub-assembly according to claim **2**, wherein the secondary electrochemical cell comprises an anode.

13. The sub-assembly according to claim **2**, wherein the secondary electrochemical cell comprises a cathode.

14. The sub-assembly according to claim **2**, wherein the secondary electrochemical cell comprises an electrolyte.

15. The sub-assembly according to claim **2**, wherein the secondary electrochemical cell comprises an anode, a cathode, and an electrolyte.

16. The sub-assembly according to claim **15**, wherein at least one of the anode, cathode, and electrolyte are monitored by the intelligent system.

17. The sub-assembly according to claim **15**, wherein the anode, cathode, and electrolyte are monitored by the intelligent system.

18. The sub-assembly according to claim **15**, wherein the structural integrity of the anode and the cathode are monitored by the intelligent system.

19. The sub-assembly according to claim **15**, wherein the electrolyte level of the electrolyte is monitored by the intelligent system.

20. The floor cleaning machine according to claim **3**, wherein the secondary electrochemical cell comprises an anode, a cathode, and an electrolyte, and wherein the structural integrity of the anode and the cathode are monitored by the intelligent system, and the electrolyte level of the electrolyte is monitored by the intelligent system.

* * * * *