H. W. LEAVITT.

TRACTOR.

APPLICATION FILED DEC. 31, 1913.

1,132,363.

Patented Mar. 16, 1915.

3 SHEETS—SHEET 1.

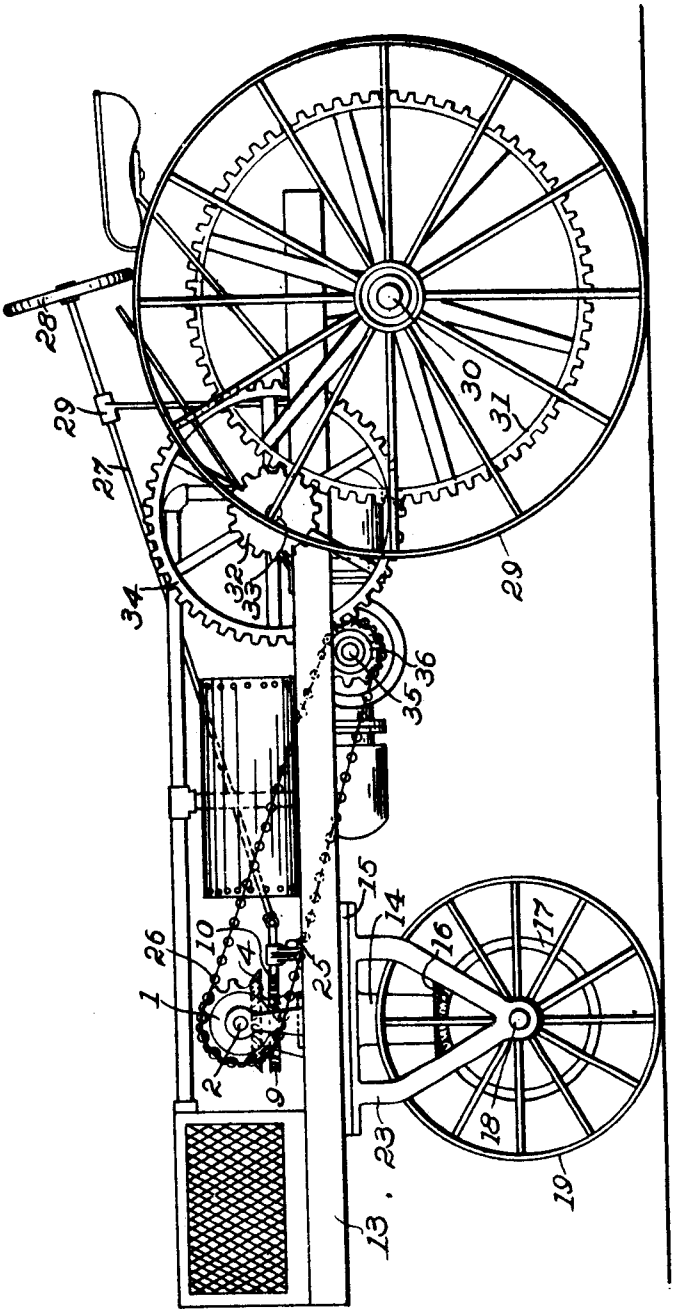

Fig. 1.

WITNESSES

H. B. Burr

C. C. Lindner

INVENTOR

H. W. LEAVITT

by G. G. Kennedy

ATTORNEY

H. W. LEAVITT.

TRACTOR.

APPLICATION FILED DEC. 31, 1913.

1,132,363.

Patented Mar. 16, 1915

3 SHEETS—SHEET 2.

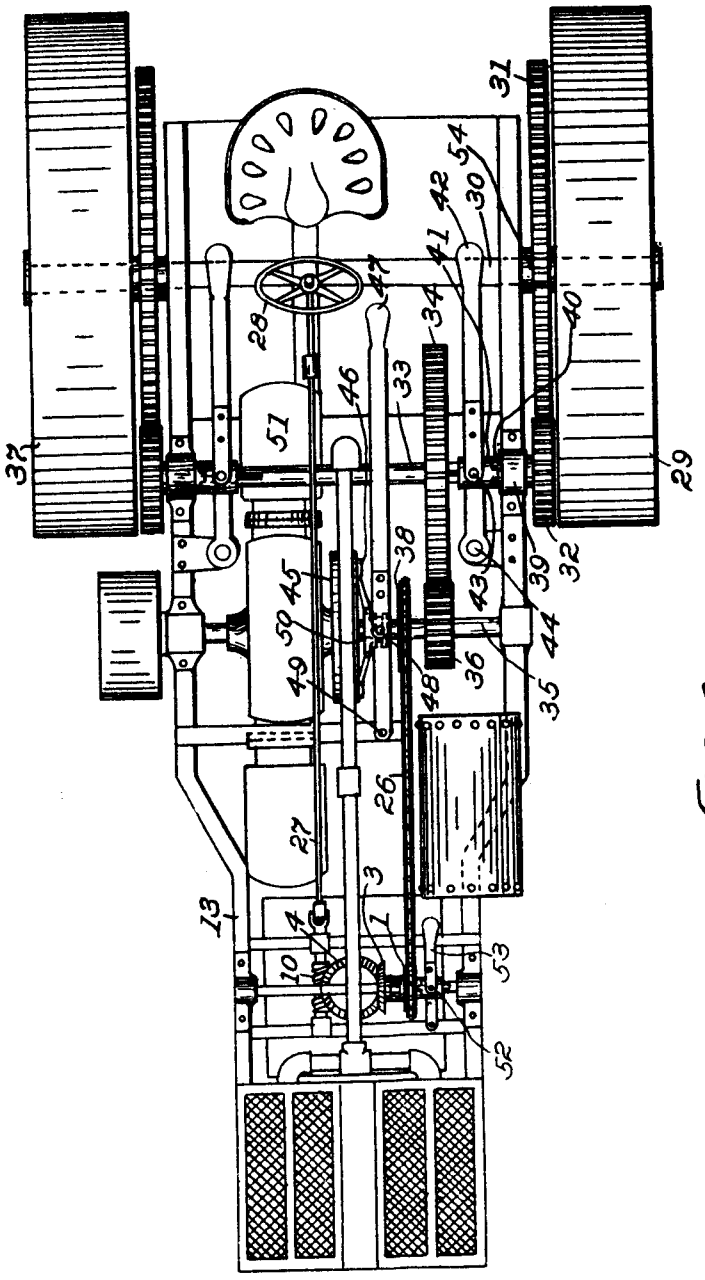

Fig. 2

WITNESSES:
H. B. Burr
C. C. Linduer

INVENTOR
H. W. LEAVITT
by G. G. Kennedy.
ATTORNEY

H. W. LEAVITT.

TRACTOR.

APPLICATION FILED DEC. 31, 1913.

1,132,363.

Patented Mar. 16, 1915.

3 SHEETS—SHEET 3.

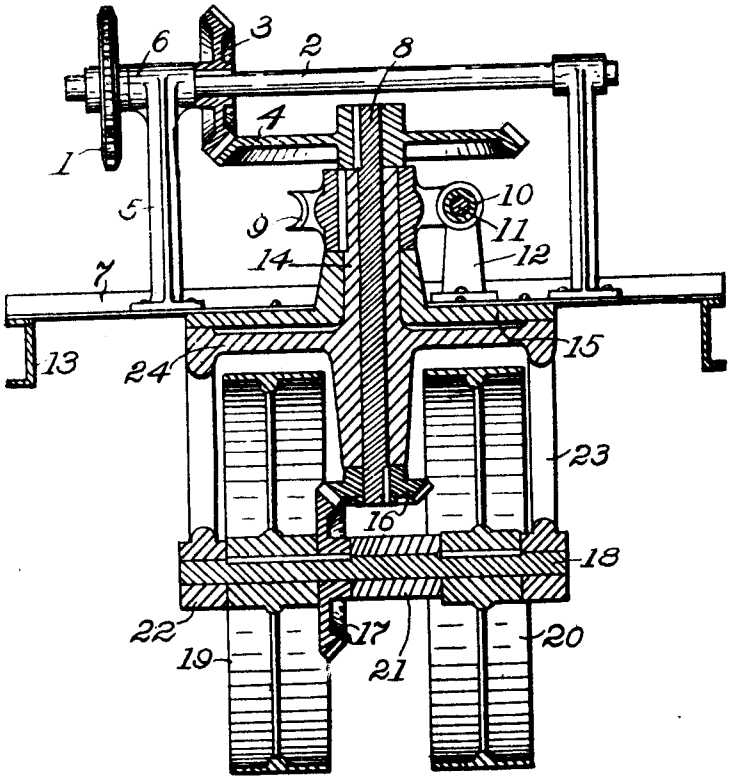

Fig. 3.

WITNESSES:

H. B. Burr.

C. C. Linduer

INVENTOR

H. W. Leavitt

by G. C. Kennedy

ATTORNEY

UNITED STATES PATENT OFFICE.

HARRY W. LEAVITT, OF WATERLOO, IOWA.

TRACTOR.

1,132,363. Specification of Letters Patent. Patented Mar. 16, 1915.

Application filed December 31, 1913. Serial No. 809,647.

To all whom it may concern:

Be it known that I, HARRY W. LEAVITT, a citizen of the United States of America, and a resident of Waterloo, Blackhawk county, Iowa, have invented certain new and useful Improvements in Tractors, of which the following is a specification.

My invention relates to improvements in tractors, and the objects of my improvements are, first, to provide means for positively driving both the pairs of carrying-wheels of a four-wheeled machine with means for disconnecting the driving-means from one pair of wheels without affecting the driving of the other pair of carrying-wheels; and second, to combine with the pair of such carrying-wheels which are mounted for horizontal rocking to be adapted to be used as steering-wheels, such mechanism as will permit the said steering-wheels to be rocked horizontally without interfering with the positive driving-action thereon of the other driving-mechanism.

These objects I have accomplished by the mechanism which is hereinafter described and claimed, and which is illustrated in the accompanying drawings, in which:

Figure 1 is a side elevation of my improved tractor, and Fig. 2 is an upper plan view thereof. Fig. 3 is an enlarged detail view, partly in elevation and partly in cross-section, of the pair of steering-wheels, their mountings and operating-mechanism both for driving and steering.

Similar numerals of reference denote corresponding parts throughout the several views.

The tractor shown in Figs. 1 and 2 has connected frame-bars 13 mounted on the rear carrying-wheels 29 and 37 rotatable on a fixed axle 30, and on forward steering-wheels 19 and 20 which last are secured on a rotatable axle 18 mounted pivotally relative to said frame for horizontal rocking movements.

A prime-motor 51 is mounted in said frame and is adapted to drive a crank-shaft 35 on which is fixedly mounted a friction-rim 45 whose inner wall is adapted to be frictionally engaged by the movable friction-heads 46 mounted on a sleeve 50 which is slidably and non-rotatably mounted on said shaft and provided with an annular groove adapted to movably receive the forks on a pivoted hand-lever 47, which latter is pivoted at its forward end to a cross-beam of the frame at 49. A pinion 36 is also fixedly mounted on the shaft 35 and is in mesh with a gear-wheel 34 fixed on a counter-shaft 33 rotatably mounted across said frame in the bearings 39. Like pinions 32 are fixedly mounted on the ends of said shaft 33 outside of the frame-bars 13 and are in mesh with the large gear-wheels 31, which latter are fixedly mounted on the rear hubs 54. The hub-part 40 of each pinion 32 has a clutch-face with which a mating-clutch collar 41 is adapted to be engaged, the latter having an annular groove in which is movably seated the ends of a fork on the hand-lever 42, the latter pivoted at 43 to a bracket-arm on the frame-bar 13 on that side. These clutches supply the place of a differential gearing, since either hand-lever may be shifted to unclutch either clutch connected therewith to permit the carrying-wheel on that side to rotate freely undriven, differentially, on said fixed rear axle 30. The numeral 38 denotes a sprocket-wheel fixedly mounted on the said shaft 35, and a sprocket-chain 26 is engaged movably about it.

The numeral 15 denotes a casting of a disk-like form and having a central integral upwardly-directed sleeve-bearing or cylindrical casting, said casting being secured in the forward part of said frame as indicated in Fig. 3. The numeral 24 denotes another casting also of disk-like form and placed coaxially and abutting movably upon the lower face of the disk-part of the first-mentioned casting. Said casting 24 has both upwardly and downwardly-directed sleeve-bearing-parts which have a single vertical cylindrical seat adapted to receive a vertical rotary shaft 8 the ends of the latter projecting both above and below the ends of said bearing-part, while the upper-bearing part is seated rotatably in the sleeve-bearing on the casting 15. The numeral 23 denotes integral hangers on opposite sides of the casting 24 and which have bearings at their lower ends orificed in line to receive the ends of a rotary axle 18. A pair of like spaced carrying-wheels 19 and 20 are fixedly mounted on said axle abutting upon said bearings, and a bevel-gear wheel 17 is fixedly mounted on the axle abutting upon said wheel 19.

A spacing-sleeve 21 is mounted upon the axle between the gearing-wheel 17 and the other carrying-wheel 20. A bevel-pinion 16 is fixedly mounted on the lower projecting end of said vertical shaft 8 and is in

mesh with said gear-wheel 17. A bevel-gear wheel 4 is fixedly mounted upon the upper end of the shaft 8, and is in mesh with a bevel pinion 3 secured on a transverse shaft 2, the ends of the latter being rotatably seated in bearings 6 on the standards 5 supported on a cross-beam of the frame. A sprocket-wheel 1 loose on the shaft 2 is in mesh with the said sprocket-chain 26.

Referring now to Fig. 2, the numeral 52 denotes a clutch-sleeve which is sildably and non-rotatably mounted on said shaft 2 and which has a clutch-face mating with a clutch-face on the hub of the sprocket-wheel 1. Said sleeve has an annular groove adapted to receive forks on a hand-lever 53, which latter is fulcrumed on a cross-bar of the frame. By this means the sprocket-wheel may be allowed to run idly, when it is desired to drive with the larger rear-wheels only, as while the tractor is being driven to or from the place where it is to be employed.

Returning now to said Fig. 3, it will be seen that a worm-wheel 9 is fixedly mounted on that part of the casting 24 which extends above the casting 15, and is located immediately under the bevel-gear wheel 4. A worm 10 is in mesh with said worm-wheel, and is connected by means of a universal-joint to the forward end of a rock-shaft 27 whose rear end is furnished with a hand-wheel 28, said rock-shaft being seated in a bearing 29 on a standard on said frame. The worm 10 is mounted in a bearing on a standard 12.

The steering-wheels 19 and 20 being spaced but a small distance apart, no differential gearing is necessary. They are both positively rotated when the clutch-sleeve 52 is engaged with the hub of the sprocket-wheel 1, through the means of the above-described gearing.

It will be seen that the worm-wheel 9 may be turned appropriately to rock the casting 24 and the axle 18 with the wheels 19 and 20, without affecting the driving-mechanism of said wheels.

Having described my invention, what I claim as new, and desire to secure by Letters Patent, is:

In a tractor, a frame, a vertical sleeve-bearing fixedly mounted therein, another vertical sleeve-bearing mounted in the first said sleeve-bearing to rock therein, the first-mentioned sleeve-bearing having a disk-shaped flange coaxial therewith, the second-mentioned having a like flange seated movably and coaxially on the other said flange, hangers depending fixedly from the second-mentioned flange and provided with alined bearings, a rotary axle seated in the alined bearings, a carrying-wheel mounted on said axle, a gear-wheel secured on said axle, a rotary shaft in said second-mentioned sleeve-bearing, a pinion on said shaft in mesh with said gear-wheel, means for rotating said last-mentioned shaft, and means for rocking said second-mentioned sleeve-bearing.

Signed at Waterloo, Iowa, this 17th day of Dec. 1913.

HARRY W. LEAVITT.

Witnesses:
G. C. KENNEDY,
PEARL STANTON.