July 27, 1937. L. SUTHERLIN ET AL 2,088,493

CATHODE RAY TUBE

Filed June 21, 1933

Fig. 1.

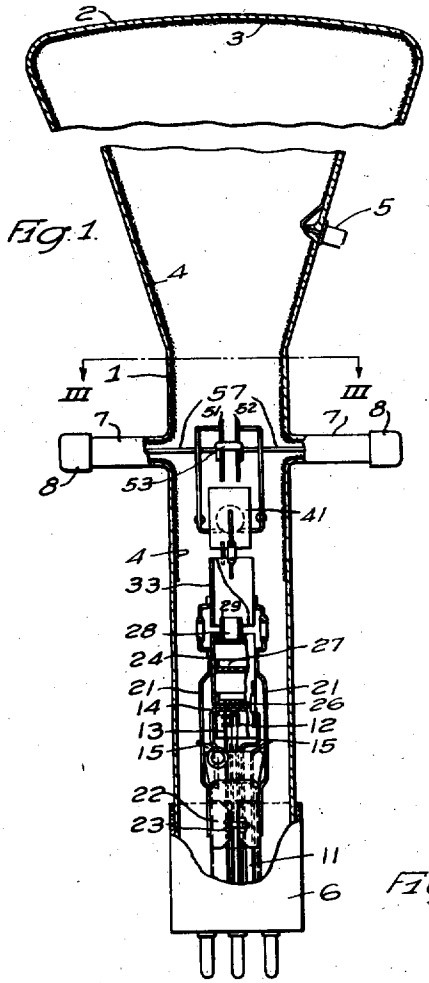

Fig. 4.

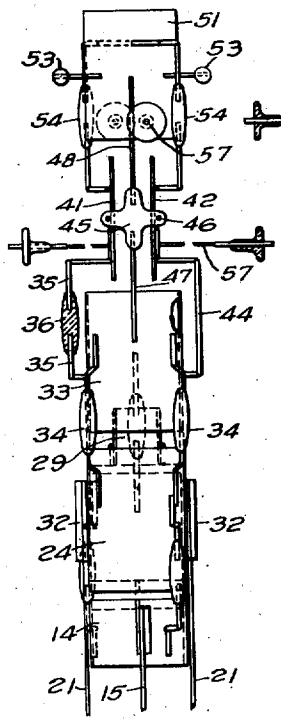

Fig. 5.

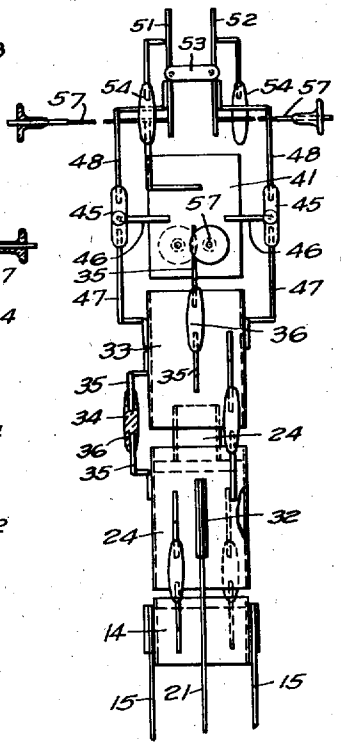

Fig. 7.

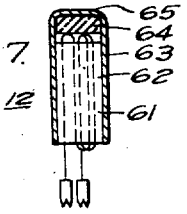

Fig. 6.

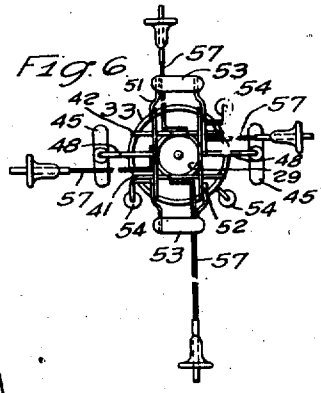

Fig. 2.

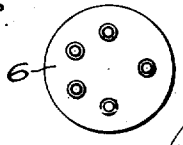

Fig. 3.

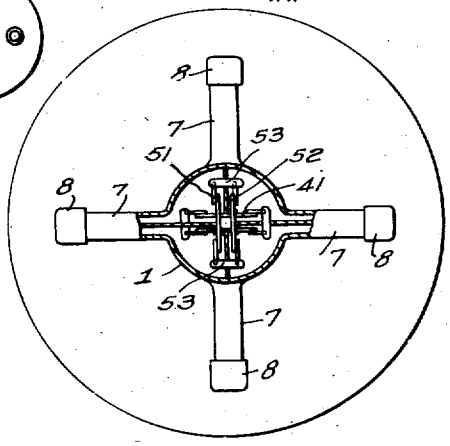

Fig. 8.

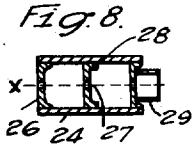

WITNESSES:

E. A. McSkimming

F. T. Hicks

INVENTORS.

Lee Sutherlin and

Albert J. Harcher

BY

ATTORNEY

Patented July 27, 1937 2,088,493

UNITED STATES PATENT OFFICE

2,088,493

CATHODE RAY TUBE

Lee Sutherlin, Wilkinsburg, and Albert J. Harcher, Homestead, Pa., assignors to Westinghouse Electric & Manufacturing Company, East Pittsburgh, Pa., a corporation of Pennsylvania

Application June 21, 1933, Serial No. 676,808

10 Claims. (Cl. 250—27.5)

Our invention pertains to cathode-ray tubes, and more particularly to tubes of the type suitable for oscillographic circuit analysis as by observing or photographically recording the wave shapes of varying current or voltage quantities.

Cathode-ray tubes, in general, comprise means for generating a stream of electrons which is projected as a small spot upon a fluorescent screen. By passing the stream of electrons through either an electrostatic field, or a magnetic field, the stream is swerved from its straight path and traces a pattern or wave on the screen which corresponds to the control voltage which creates the field.

Numerous applications of such tubes have already been made in industrial routine testing, but the tubes previously available could not be uniformly assembled, did not have uniform characteristics and it has often been difficult to obtain a sufficiently sharp focus of the trace on the screen.

It is accordingly an object of our invention to provide cathode-ray tubes having uniformly improved characteristics.

A further object of our invention is to provide cathode-ray tubes wherein the component parts may be assembled and spaced with uniform accuracy to insure improved focusing characteristics.

It is also an object of our invention to provide a cathode-ray tube wherein the component elements are mounted as a rigid unit upon one stem.

A further object of our invention is to provide means for projecting a sharply defined stream of electrons.

The invention itself, however, both as to its organization and its method of operation, together with additional objects and advantages thereof, will best be understood from the following description of a specific embodiment, when read in conjunction with the accompanying drawing, in which:

Figure 1 is a sectional view along the longitudinal axis of a cathode-ray tube constructed in accordance with our invention;

Fig. 2 is a plan view of the socket plug on the end of the tube;

Fig. 3 is a sectional view taken on line III—III of Fig. 1;

Fig. 4 is an enlarged side elevational view of the integral assembly comprising the elements of the tube which is mounted as a unit on the press;

Fig. 5 is a similar view showing the assembly turned ninety degrees;

Fig. 6 is a top plan view of the assembly;

Fig. 7 is a detail view showing the electron source; and,

Fig. 8 is a detail view showing a section taken axially through the electron gun which projects the electron stream.

Referring more specifically to Fig. 1 of the drawing, our cathode-ray tube comprises a glass container 1, which encloses and supports the various elements. The vessel is preferably of an inverted conical formation having a tubular portion extending from the apex theerof. The base 2 of the conical portion is preferably convex and the interior surface is provided with a fluorescent screen 3 which may, for example, consist of a coating of willemite, a crystalline substance containing zinc, which becomes a vivid green when struck by a stream of electrons. In order to drain off the electrons, the screen is made slightly conducting and is in contact with the second or high speed accelerating anode which comprises a silver coating 4 provided on the inner surfaces of the side walls of the conical portion. A terminal 5 extending from the side of the conical portion affords convenient connection to this high speed or second anode. It is to be understood, however, that the principles of our invention are also applicable to cathode-ray tubes which are not provided with a second anode.

The lower end of the tubular portion of the vessel is provided with a contact plug 6 to establish electrical connection through a conventional socket (not shown) to various circuits (not shown) from which the tube is to be energized. It is desirable to keep the test and timing circuit connections as far removed from the other circuits as possible, and for this reason the tube is provided with hollow conduit portions 7 projecting radially from an intermediate portion of the tube for leading individual conductors into the tube. There are four such radially extended arms, and each is closed by a terminal cap 8 to which the timing and test circuits may be connected in any suitable manner.

Rising from the lower end of the tubular portion of the vessel is a stem or press 11 through which conductors are extended from the contacts in the contact plug to the elements within the tube. An electron emitter 12, described in detail hereafter, is supported on a pin 13 which is sealed directly into the press. A control electrode 14, which comprises an inverted cup having an opening in the bottom thereof, is also mounted

on pins 15 supported in the press and is positioned with the opening directly above the electron source 12. By applying suitable potentials on this electrode the electron emission from the source 12 may be accurately controlled.

The remainder of the tube elements are assembled together into a unit which is supported by three pins 21 welded or soldered to a flexible metallic band 22 which is clamped around the stem 11 by a bolt or screw 23.

The unitary assembly is more clearly shown in Figs. 4 and 5, in which the latter shows an enlarged side elevational view of the assembly from the same position as Fig. 1, and Fig. 4 shows how the structure appears when turned ninety degrees on its axis.

Directly above the electron emitter 12 and control electrode 14 is a cylindrical accelerating anode 24 for accelerating the electrons discharged from the electron emitter 12 and projecting them as a sharply defined stream. This device comprises a closed cylindrical member having at least one partition wall or diaphragm 27 intermediate its two end diaphragms 26 and 28, as shown more clearly in Fig. 8.

A small hole is provided in each diaphragm in series alignment whereby the emitted electrons pass through the three diaphragms in succession. By charging this cylindrical accelerating anode with a suitable positive potential relative to the electron emitter, the approaching electrons are accelerated. Some of the electrons passing through the first diaphragm 26 and impinging upon the side walls and edges cause the emission of secondary electrons, some of which pass through the opening of the second diaphragm 27 at a wide angle. The third diaphragm 28, however, almost completely eliminates the secondary electrons which have not passed through the holes in both the first and the second diaphragms.

By mounting a smaller cylindrical member 29 on the last diaphragm 28, any stray electrons emerging from the third orifice will be collected. If desired, a greater number of diaphragms than three may be provided. The electron gun 24 is supported by the three external brackets 21 welded or soldered to suitable fins 32 on the outer walls of the gun and extending down and secured to the flexible band 22 which is clamped on the stem 11.

Directly above the electron gun 24, in axial alignment therewith, a cylindrical member 33 of the same diameter is mounted in spaced insulated relation. The cylinder serves the purpose of an electrostatic shield and also as a structural member rendering possible the rigid union of the various elements of the tube. It is rigidly supported in suitable spaced relation from the electron gun, by three externally disposed bracket arms 34 extending upwardly from the electron gun 24 and spaced equally around the circumference. Each bracket arm 34 consists of two angular metallic members 35 having their adjacent ends sealed in a glass insulator bead 36 and their diverging ends secured to the cylinders, as clearly shown by the sectional view of one such insulating bracket in Fig. 4. By making the insulated bracket arms as short as possible, and providing them at three or more points around the circumference of the cylinders, the latter are quite rigidly united.

A pair of deflecting plates 41 and 42 are supported above the cylindrical member 33 in suitable spaced parallel relation by four angular bracket members. One of the bracket members 44 provides direct conductive connection between the cylindrical shield member 33 and its associated deflecting plate 42, and prevents the accumulation of electric charges. The other three bracket arms supporting and joining the plates are provided with the glass insulating beads. The insulating glass beads 45 adjacent the parallel edges of the plates 41 and 42 are quadrumanous, having a formation somewhat similar to a four leaf clover, for securing the ends of four metallic bracket members, two of which 46, extend laterally to be secured to the adjacent plates, one of which 47, extends downwardly from each bead to be secured to diametrically opposite points on the cylindrical shield member 33, and the fourth of which 48, extends upwardly from each of the quadrumanous beads to be secured to a second pair of deflecting plates 51 and 52. It will be apparent that the arrangement of the quadrumanous beads 45 serves not only to rigidly support and insulate the plates, but also to hold them rigidly in proper spaced relation.

The second pair of deflecting plates 51 and 52 comprise the uppermost elements of the assembly, and to hold them in rigidly spaced parallel relation, a pair of insulating bracket arms 53 are provided, one of which is connected across each of the adjacent opposed edges of the plates. To hold the upper pair of plates in rigidly aligned relation above the first pair of plates, additional insulating bracket arms 54 are secured between the upper and the lower plates, in offset relation to the arms 48 projecting upwardly from the quadrumanous beads 45, thereby providing a four point support and affording a bracing structure to prevent lateral flexing of the latter. A flexible conductor 57 is attached to each one of the deflecting plates and is adapted to be extended through the corresponding lateral conduit portions of the vessel for connection to the terminal caps when assembled.

The cylindrical shield member 33 not only serves a very important function as a rigid structural unit suitably spacing the deflecting plates away from the first anode 24 without the necessity of using long flexible bracket arms, but it also serves a very important function as an electrostatic shield. In the operation of the cathode-ray tube, the electron emission causes electric charges to accumulate on the glass beads. Such charges set up strong electrostatic fields which deflect the electron stream from its straight course if it is unshielded. The cylindrical member 33 shields the beam in its path between the first anode 24 and the first pair of plates 41 and 42 and causes the tube to function properly.

The union of the various elements of the cathode-ray tube into a rigid assembly having predetermined spaced relation is a very important contribution to the successful operation of such a device. This is true not only because of the importance of maintaining the accurate alignment of the various elements and the electron stream therethrough, but also because of the fact that where a series of diaphragms, cylinders or the like are used, through which an electron stream passes, such elements act similar to lenses in optics and must be properly adjusted with respect to distance, dimensions and voltage in order to give the best light and the sharpest definition on the screen.

In one specific embodiment of our invention, in which the cylindrical elements had a diameter of ¾ of an inch, it was found preferable to use a small cylinder on the anode having a length and

a diameter equal to ⅜ of an inch, and the anode diaphragms spaced equally. The holes in the first, second and third diaphragms were .054, .096 and .041 inch in diameter respectively. The deflecting plates were ¾ x 1 inch and the plates of each set were spaced ⅛ of an inch. The control electrode comprised an inverted cup ¾ inch in diameter, ½ inch long, with a hole .088 inch in diameter and spaced .030 inch from the anode. The cylindrical shield, the anode and the sets of plates were spaced axially by ⅛ of an inch. The dimensions and spacings above set forth are given merely for an example of a structure which is satisfactory for a specific set of conditions and is not to be construed as imposing limitations, since the desirable features of our invention are applicable to all cathode-ray tubes large and small.

Accurate alignment and spacing when the deflecting plates are separately mounted and supported on the walls of the glass enclosure is very difficult to obtain and is not permanent. In the cathode-ray tube constructed in accordance with our invention, these elements are first properly spaced and united on the press before it is inserted in the vessel, instead of attempting to properly align and space the elements as the press is inserted and sealed into the vessel. The arrangement and spacing of the elements of the tube is much more accurately obtained in this manner, and the tube so constructed is so rugged that its characteristics are not injuriously affected by moderate shocks and vibrations.

As shown in Fig. 7, the electron emitter may be of the electrically heated type comprising a heater 61 of fine tungsten wire coiled about through a plurality of holes extending axially in spaced parallel relation through a cylindrical rod 62 of magnesium oxide enclosed within a metallic nickel shell 63 from which it is suitably insulated. The heater shell 63 is closed at the upper end and is provided with an insulator 64 adjacent the inner surface and with a suitable electron emitting substance 65 on the upper surface.

From the base of the stem 11 five conductors extend to corresponding contact prongs in the control plug 6. Two of the conductors are connected to the heater 61 in the electron emitter, a third is connected to the shell 63, a fourth is connected to the control electrode and the other conductor is connected to the first accelerating anode 24.

In operation a suitable positive potential is applied to the first anode 24 to cause it to project a stream of electrons. A much higher positive potential is applied to the second anode comprising the silver coating on the inner surface of the conical portion of the vessel to accelerate the electron stream after it has been deflected by the plates to thereby create a much brighter spot on the screen, as set forth in Patent No. 1,810,018 of D. E. Howes. The electron stream is thus projected from the first anode at low velocity for great sensitivity, or maximum deflection by the plates, and it is then accelerated to high speed to produce a bright sharp trace on the screen. In view of the high positive potential on the second anode and the proximity of the deflecting plates thereto, it is preferable to ground the second anode in any suitable manner, since the circuits to be analyzed are not usually very well insulated.

It will therefore be seen that we have provided an improved cathode-ray tube and a method of constructing the same wherein uniformly improved characteristics may be readily attained.

Although we have shown and described certain specific embodiments of our invention, we are fully aware that many modifications thereof are possible. Our invention, therefore, is not to be restricted except insofar as is necessitated by the prior art and the scope of the appended claims.

We claim as our invention:

1. A unitary assembly for a cathode-ray tube comprising an accelerating anode, sets of deflecting plates, an electrostatic shield about the electron path between said anode and plates and means for rigidly supporting said plates on said anode comprising said electrostatic shield and insulators, said electrostatic shield disposed in spaced relation to said insulators to protect the electron stream from the deflecting influence of electrostatic fields set up by accumulated electrical charges on said insulators.

2. A unitary assembly for a cathode-ray tube comprising a cylindrical accelerating anode, a cylindrical shield in axial alignment therewith, external means for securing said cylinders in spaced insulated relation, a pair of spaced parallel deflecting plates, external means for securing said plates in insulated relation on said shield in spaced relation to the anode and the extended axis thereof, a metallic member connected between one of said plates and the shield to provide additional support and conductive connection therebetween, a second pair of spaced parallel plates disposed at right angles to the plane of said first plates, and external means for securing said second pair of plates in insulated spaced relation from said first plates and spaced about the extended axis of said anode.

3. A cathode-ray tube comprising an electron emitter, an accelerating anode for accelerating and projecting an electron stream therefrom, sets of deflecting plates, an electrostatic shield about the electron path between said anode and plates, means for rigidly supporting said sets of plates on said anode comprising said electrostatic shield and insulators, said electrostatic shield being in spaced relation to said insulators to protect the electron stream from the deflecting influence of electrostatic fields set up by electric charges on said insulators, an evacuated vessel, a stem therein, and means for supporting said anode on said stem.

4. A cathode-ray tube comprising an electron source, a control electrode, an anode, deflecting plates, means for rigidly securing said electron source, control electrode, anode and plates together in spaced insulated relation, an evacuated vessel for enclosing and supporting said elements, a stem extending into said vessel, means for supporting said electrode source on said stem, hollow arms projecting radially from an intermediate portion of said vessel adjacent said plates, a terminal cap on the end of each arm, and a flexible conductor extending from each plate through an adjacent arm to the associated terminal cap.

5. A cathode-ray tube comprising an electron source, a control electrode, a cylindrical accelerating anode, a stem, means for supporting said anode on said stem, a cylindrical shield in axial alignment therewith, external means for securing said cylinders in spaced insulated relation, a pair of spaced parallel deflecting plates, external means for securing said plates in insulated relation on said shield in spaced relation to the anode and the extended axis thereof, a metallic member connected between one of said plates and the shield to provide additional support and conductive con-

nection therebetween, a second pair of spaced parallel plates disposed at right angles to the plane of said first plates, external means for securing said second pair of plates in insulated spaced relation from said first plates and spaced about the extended axis of said anode, and an evacuated vessel for enclosing and supporting said elements.

6. A cathode-ray tube comprising an evacuated vessel, a stem extending thereinto, a unitary structure supported on said stem comprising an electron emitter, a control electrode, an accelerating anode and sets of deflecting plates, arms projecting from a portion of said vessel adjacent said plates and flexible conductors extending from said plates through said arms.

7. In combination in a cathode-ray tube an electron emitter, a control electrode, a first accelerating anode for accelerating and projecting a stream of electrons therefrom, sets of deflecting plates, an evacuated vessel, a stem therein, means for rigidly supporting and insulating said electron emitter, control electrode, accelerating anode and plates as a rigid unit on said steam, a fluorescent screen on the opposite end of said vessel, a conductive surface on the walls of said vessel adjacent to said screen comprising a second high speed accelerating anode, and a terminal conductively connected thereto.

8. A cathode ray tube comprising a container having a cathode, a control electrode, a first anode, deflecting plates, another anode and an electrostatic shield surrounding the electron discharge path intermediate said first anode and said deflecting plates.

9. A cathode ray tube comprising a container having a cathode, a control electrode, deflecting plates, an anode and a cylindrical member insulated from said anode intermediate said control electrode and said deflecting plates and a direct connection from said cylindrical member to one of said plates.

10. A cathode ray tube comprising a container having a cathode, a control electrode, a separate structure adjacent thereto restricting the path of the electrons issuing from said cathode, a cylindrical conducting member surrounding the electron path, an anode, deflecting plates intermediate said cylindrical conducting member and said anode and a direct connection between one of said plates and said cylindrical member.

LEE SUTHERLIN.
ALBERT J. HARCHER.

DISCLAIMER

2,088,493.—*Lee Sutherlin*, Wilkinsburg, and *Albert J. Harcher*, Homestead, Pa. CATHODE RAY TUBE. Patent dated July 27, 1937. Disclaimer filed November 15, 1939, by the assignee, *Westinghouse Electric & Manufacturing Company*.

Hereby enters this disclaimer to claims 4 and 6 of the patent.

[*Official Gazette December 5, 1939.*]

nection therebetween, a second pair of spaced parallel plates disposed at right angles to the plane of said first plates, external means for securing said second pair of plates in insulated spaced relation from said first plates and spaced about the extended axis of said anode, and an evacuated vessel for enclosing and supporting said elements.

6. A cathode-ray tube comprising an evacuated vessel, a stem extending thereinto, a unitary structure supported on said stem comprising an electron emitter, a control electrode, an accelerating anode and sets of deflecting plates, arms projecting from a portion of said vessel adjacent said plates and flexible conductors extending from said plates through said arms.

7. In combination in a cathode-ray tube an electron emitter, a control electrode, a first accelerating anode for accelerating and projecting a stream of electrons therefrom, sets of deflecting plates, an evacuated vessel, a stem therein, means for rigidly supporting and insulating said electron emitter, control electrode, accelerating anode and plates as a rigid unit on said steam, a fluorescent screen on the opposite end of said vessel, a conductive surface on the walls of said vessel adjacent to said screen comprising a second high speed accelerating anode, and a terminal conductively connected thereto.

8. A cathode ray tube comprising a container having a cathode, a control electrode, a first anode, deflecting plates, another anode and an electrostatic shield surrounding the electron discharge path intermediate said first anode and said deflecting plates.

9. A cathode ray tube comprising a container having a cathode, a control electrode, deflecting plates, an anode and a cylindrical member insulated from said anode intermediate said control electrode and said deflecting plates and a direct connection from said cylindrical member to one of said plates.

10. A cathode ray tube comprising a container having a cathode, a control electrode, a separate structure adjacent thereto restricting the path of the electrons issuing from said cathode, a cylindrical conducting member surrounding the electron path, an anode, deflecting plates intermediate said cylindrical conducting member and said anode and a direct connection between one of said plates and said cylindrical member.

LEE SUTHERLIN.
ALBERT J. HARCHER.

DISCLAIMER

2,088,493.—*Lee Sutherlin*, Wilkinsburg, and *Albert J. Harcher*, Homestead, Pa. CATHODE RAY TUBE. Patent dated July 27, 1937. Disclaimer filed November 15, 1939, by the assignee, *Westinghouse Electric & Manufacturing Company*.

Hereby enters this disclaimer to claims 4 and 6 of the patent.

[*Official Gazette December 5, 1939.*]