(No Model.) 3 Sheets—Sheet 1.

F. H. DOBECK.

CLOTH PILING MACHINE.

No. 481,933. Patented Sept. 6, 1892.

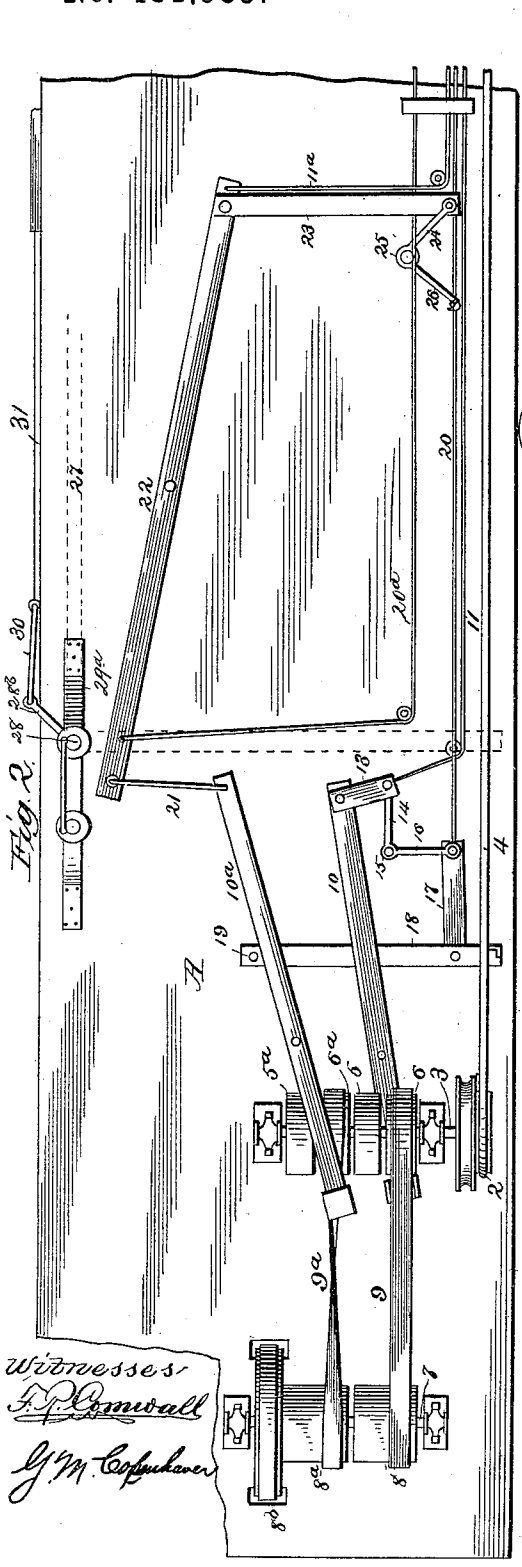

Fig. 2.

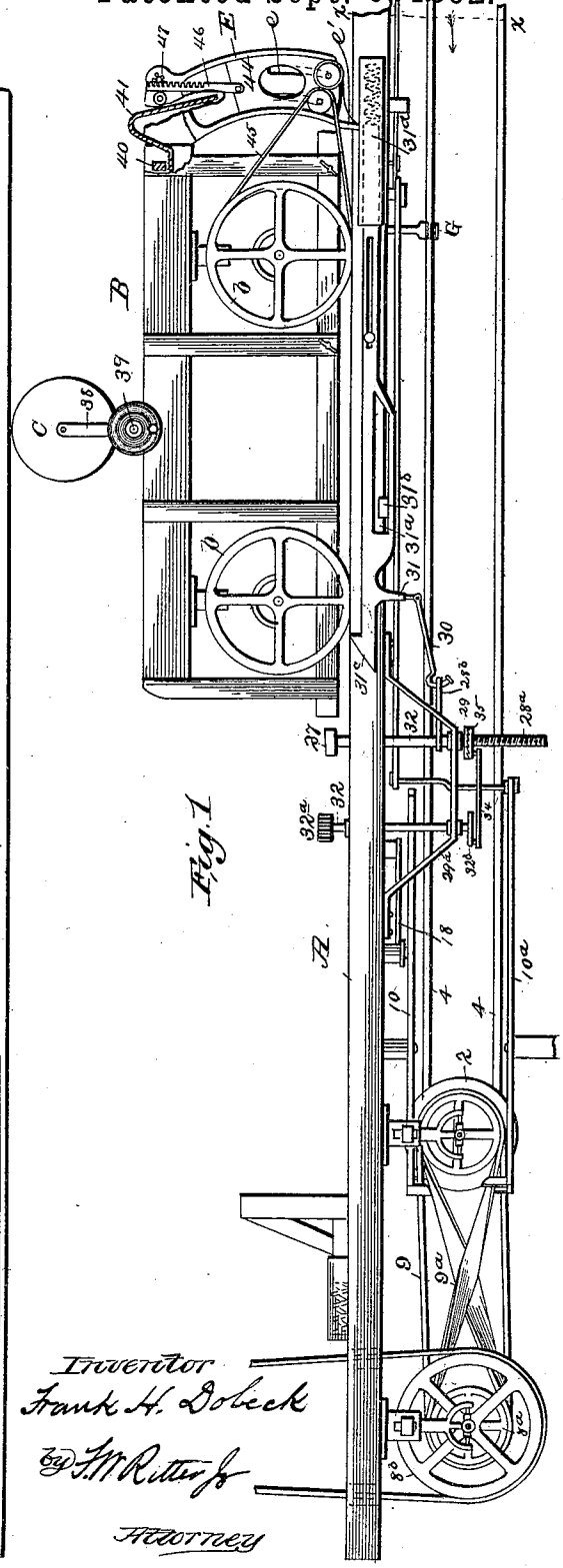

Fig. 1.

Witnesses:
F. P. Cornwall
G. M. Coppinhaver

Inventor
Frank H. Dobeck
by F. M. Ritter Jr
Attorney

THE NORRIS PETERS CO., PHOTO-LITHO., WASHINGTON, D. C.

(No Model.) 3 Sheets—Sheet 2.

F. H. DOBECK.

CLOTH PILING MACHINE.

No. 481,933. Patented Sept. 6, 1892.

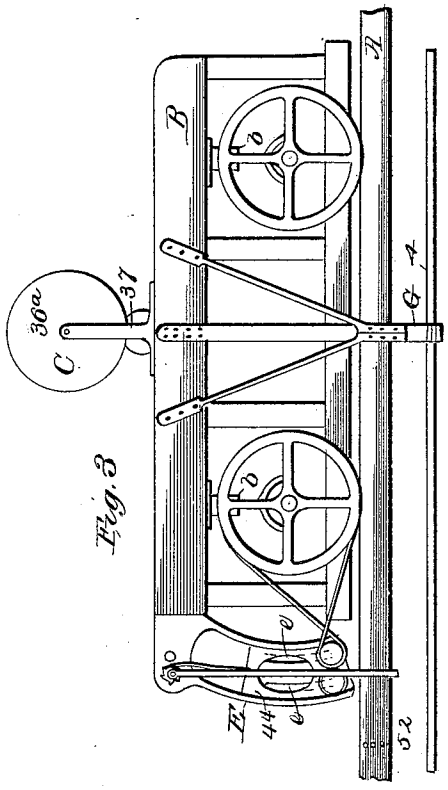

Fig. 3

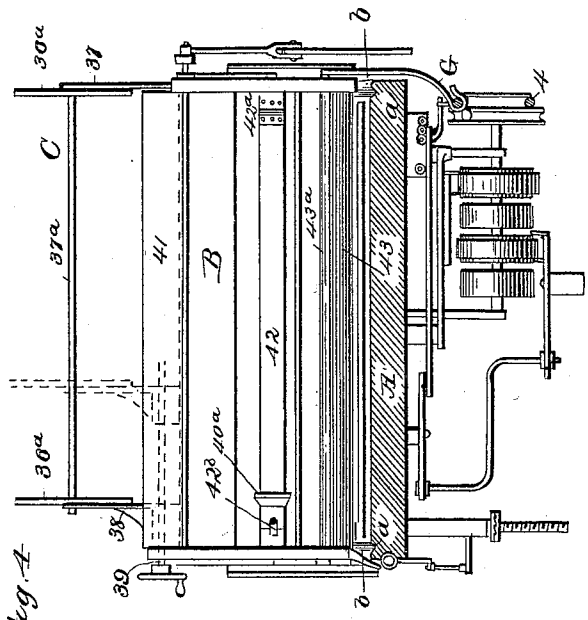

Fig. 4

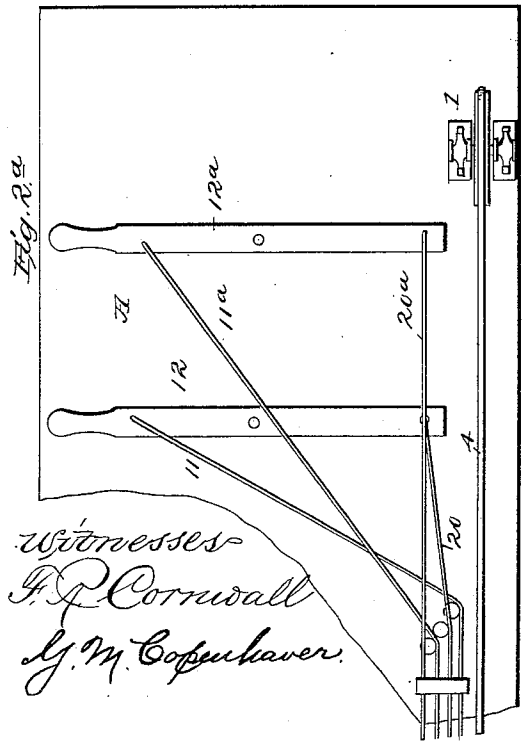

Fig. 2a

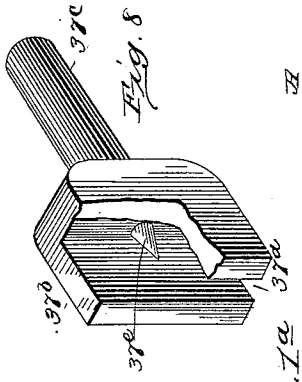

Fig. 8

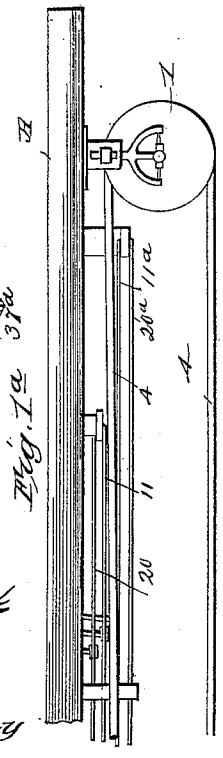

Fig. 1a

Witnesses
F. P. Cornwall
G. M. Copenhaver.

Inventor
Frank H. Dobeck
By F. W. Ritter Jr
Attorney

THE NORRIS PETERS CO., PHOTO-LITHO., WASHINGTON, D. C.

(No Model.) 3 Sheets—Sheet 3.

F. H. DOBECK.

CLOTH PILING MACHINE.

No. 481,933. Patented Sept. 6, 1892.

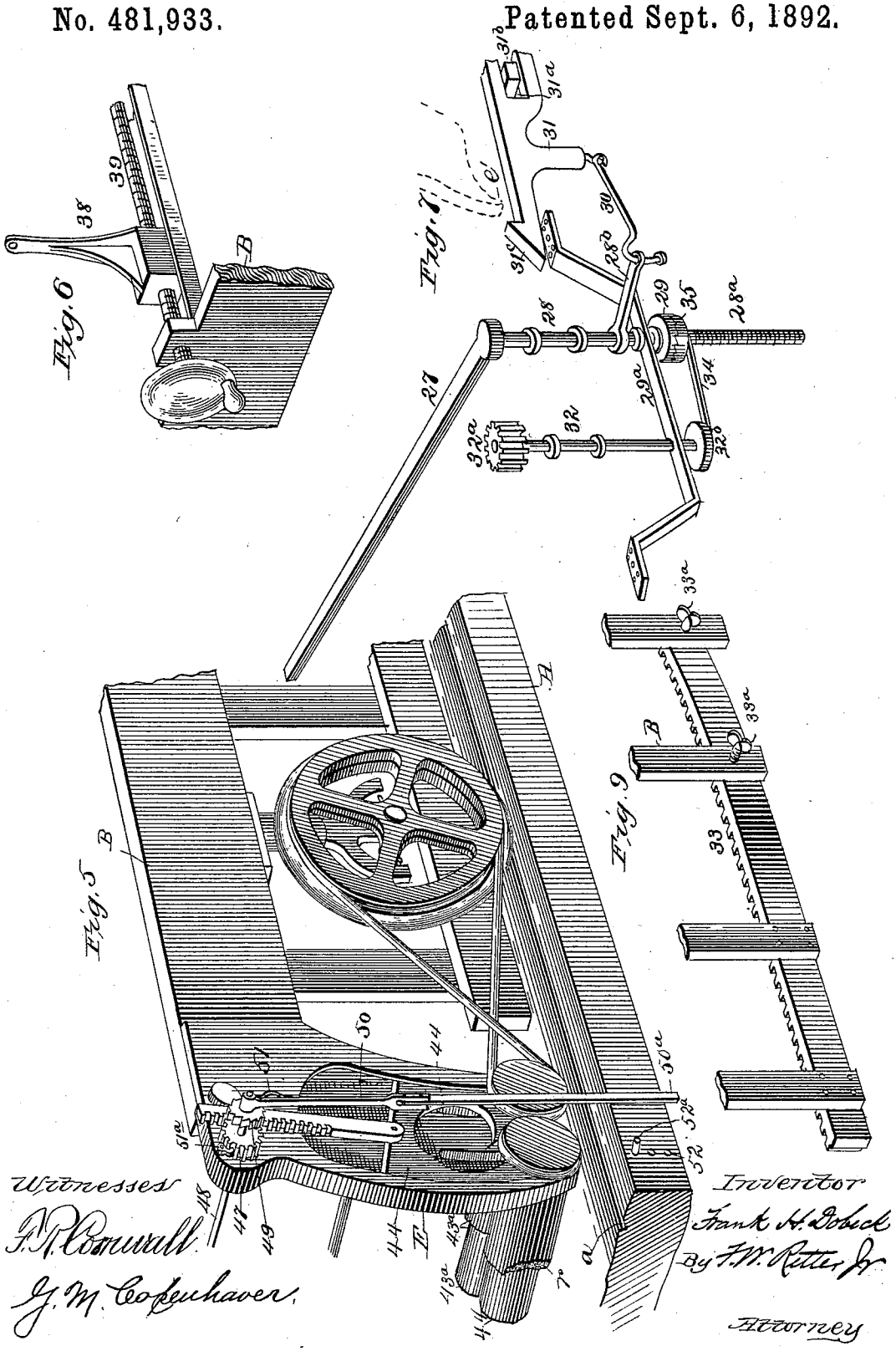

Witnesses
F. R. Cornwall
G. M. Copenhaver

Inventor
Frank H. Dobeck
By F. W. Ritter Jr.
Attorney

THE NORRIS PETERS CO., PHOTO-LITHO., WASHINGTON, D. C.

UNITED STATES PATENT OFFICE.

FRANK H. DOBECK, OF OMAHA, NEBRASKA, ASSIGNOR OF TWO-THIRDS TO JAMES T. ROBINSON AND GEORGE E. STOKES, OF SAME PLACE.

CLOTH-PILING MACHINE.

SPECIFICATION forming part of Letters Patent No. 481,933, dated September 6, 1892.

Application filed March 3, 1891. Serial No. 383,540. (No model.)

To all whom it may concern:

Be it known that I, FRANK H. DOBECK, a citizen of the United States, residing at Omaha, in the county of Douglas and State of Nebraska, have invented certain new and useful Improvements in Cloth-Piling Machines; and I hereby declare the following to be a full, clear, and exact description of the same, reference being had to the accompanying drawings, wherein—

Figure 1 is a side elevation of a piling-machine embodying my invention, the right-hand end of the machine extended on Sheet 11 and marked Fig. 1ª. Fig. 2 is an under side plan view of the table, driving-gear, and belt-shifting devices, the right-hand end of the machine extended on Sheet 11 and marked Fig. 2ª. Fig. 3 is a side elevation of a portion of the piling-table, the cloth-truck, and its grip, taken on the opposite side from Fig. 1. Fig. 4 is a vertical transverse section of the cloth-piling table on the line *x x*, Fig. 1, looking in the direction of the arrow, the truck being in elevation. Fig. 5 is a detail perspective view of a portion of the cloth-truck and piling-table, showing the mechanism for gradually raising the cloth-laying rollers. Fig. 6 is a detail view of the cloth-brake or devices for preventing the too rapid delivery of the cloth from the roll or supply-holder. Fig. 7 is a detail view of the mechanism for actuating the fold-laying arm. Fig. 8 is a perspective view of a head for holding the cloth-supply when wound on a board. Fig. 9 is a detail perspective view of the side rack-bar 33, which actuates pinion 32ª and shaft 32, showing the manner of adjustment of the rack to give greater or less movement to shaft 32.

Like symbols refer to like parts wherever they occur.

My invention relates to the construction of that class of apparatus commonly termed "piling-machines," usually employed for evenly and uniformly placing or laying a series of superimposed thicknesses of any fabric directly from the roll or bale preparatory to cutting the same into parts of garments, as is now commonly practiced in the manufacture of cheap goods, such as shirts, overalls, &c. In order to make this class of cheap garments profitable, it is necessary that large numbers be cut out at a single operation without waste and largely by special machinery adapted for that purpose. To prepare the fabric for cutting without waste, it becomes necessary to lay the cloth or fabric in uniform layers or thicknesses, frequently as great in number as one hundred, and as piling-machines are now constructed the operating of the machine, evening up the thicknesses, and adjusting the mechanism require several workmen and correspondingly add to the cost of manufacture.

The object of my present invention is as far as possible to render the cloth-piling machine automatic in its operation, so that a single workman can therewith perform the labor which now requires several and do it in as good, if not a better, manner.

The main elements of my improved piling-machine are those common to this class of machinery—viz., a piling-table, a cloth-truck provided with laying-rollers, and a bale or roll carrier mounted on the truck—and to the broad combination of such elements I herein lay no claim.

The first feature of my invention embraces the combination, with a piling-table, of a vibrating fold-laying arm adapted to swing in a plane parallel with and over the table and means for actuating said fold-laying arm, whereby the layers or folds distant from the operator are automatically evened up.

A second feature embraces the combination, with the piling-table, a cloth-carrying truck mounted thereon, and a power-cable for actuating the truck or carriage, of reversing mechanism for the cable, levers at the feed end of the table for controlling the reversing mechanism, and means on the truck for actuating the reversing mechanism independently of the levers, whereby the apparatus may be controlled by the workman at the feed end of the table and the travel of the truck or carriage automatically reversed at the distant end of the table independently of the operator.

A third feature embraces the combination, with the piling-table, of a fold-laying arm arranged at one end thereof, a cloth-truck adapted to travel on the table, and means whereby the fold-laying arm is automatically

actuated by the truck at or near the close of its movement in one direction, whereby an assistant for evening up the distant end of cloth is dispensed with.

A fourth feature embraces the combination, with the piling-table, of a vertically-adjustable vibrating fold-laying arm and mechanism for automatically and gradually raising the same to accommodate the increasing thickness of the layers of fabric on the piling-table.

A fifth feature embraces the combination, with the piling-table and a truck adapted to travel thereon, of cloth-laying rollers adjustably journaled in housings on the truck and mechanism for gradually and automatically raising said rollers from the piling-table to accommodate the increasing thickness of the layers of fabric on the piling-table.

There are other minor features of invention, all as will hereinafter more fully appear.

I will now proceed to describe my invention more fully, so that others skilled in the art to which it appertains may apply the same.

In the drawings, A indicates the piling-table, B the truck or cloth-carriage, and C the fabric-carrier, mounted on the truck.

The piling-table A can be of any desired length and width and may be grooved longitudinally on its upper surface and near the edges, as at *a a*, Fig. 4, or otherwise constructed to form a track for the wheels of truck B.

Secured to the under side of the piling-table A at the right hand or feed end thereof (see Fig. 2^a) is a grooved pulley 1, and near the opposite end of said table is a similar grooved pulley 2, secured to a shaft 3. These two pulleys 1 and 2 carry the cable 4 for moving the truck B. The shaft 3, to which pulley 2 is attached, is journaled in suitable bearings on the under side of the table and is provided with two pulleys 5 5^a and two loose pulleys 6 6^a. Supported in suitable bearings on the under side of said table is a second shaft 7, provided with fixed pulleys 8 8^a 8^b, said shaft 7 being driven from any suitable source of power through the belt on pulley 8^b and in turn communicating power to the shaft 3 through belts 9 9^a and fixed pulleys 5 5^a, one of said belts 9^a being twisted or crossed (see left end, Fig. 2) in order to give a reverse rotation to the shaft 3.

10 10^a indicate shipping-levers pivoted to the under side of the piling-table A and each provided at one end with means for controlling its respective belt 9 9^a. The opposite end of lever 10 is connected directly by a rope 11 (which passes over suitable guide-rollers) with pivoted hand lever 12 at the right-hand or feed end of the machine, and is also connected by a link 13 with a crank-arm 14 on a vertical rock-shaft 15, from which a second crank-arm 16 and intermediate link 17 connect with lever 18, having a pivot 19, said lever 18 being for automatically operating lever 10, as will hereinafter appear. The second crank-arm 16 is also connected by means of rope 20 (passing over suitable guide-rollers) with the opposite end of pivoted hand-lever 12 at the right-hand or feed end of the table. By the mechanism thus described it will be observed that by rocking the hand-lever to the right or toward the nearest end of the table the belt 9 can be shipped from the loose pulleys 6 (on which it is shown in Fig. 2 of the drawings) to the fast pulley 5, and this will cause the upper part of the cable 4 (and the truck) to move from the power end of the table toward the feed end thereof. If now the hand-lever 12 be reversed or pushed back to the position shown in Fig. 2 of the drawings, the belt 9 will be carried back to the loose pulley 6 and the movement of the cable 4 and truck B will cease. The distant end of the second shipping-lever 10^a is connected by a link 21 with a pivoted lever 22 and said lever 22 by a rope or cord 11^a (which passes over suitable guide-rollers) with one end of a second pivoted hand-lever 12^a, while the opposite end of said pivoted lever 12^a is in turn connected by a rope or cord 20^a (which passes over suitable guide-rollers) with the lever 22 on that side of its pivot nearest the shipping-lever 10^a. If now the second pivoted hand-lever 12^a be pushed in or toward the power end of the table, it will (through cord or rope 20^a) pull on the power end of pivoted lever 22 and move second shipping-lever 10^a, so as to shift crossed belt 9^a from loose pulley 6^a (on which it is shown in the drawings) to fast pulley 5^a, and thus cause the upper part of the cable 4 and the truck to move toward the power and from the feed end of the table. The reversal of pivoted hand-lever 12^a (or the pulling of it toward the feed end of the table) will reverse the position of crossed belt 9^a or shift it back on the loose pulley 6^a and stop the machine.

The hereinbefore-described mechanism will, as has been pointed out, enable a single workman placed at the feed end of the table to start, stop, and reverse the machine; but in order to automatically reverse the movement or the travel of the carriage or truck at a point near the power and distant from the feed end of the machine and from the workman the following or equivalent additional devices are provided.

The end of lever 22 nearest the feed end of the machine is connected by a link 23 with one crank-arm 24 of a vertical rock-shaft 25, and a second crank-arm 26 of vertical rock-shaft 25 stands in the path of the truck B.

On referring to the left-hand end of Fig. 2 of the drawings it will be noted that the free end of lever 18, which is connected with shipping-lever 10, as before described, also stands in the path of truck B. It will therefore be readily understood that as truck B approaches the left or power end of the piling-table it will first strike crank-arm 26 and actuate lever 22 and shipping-lever 10^a to shift belt 9^a from fast pulley 5^a to loose pulley 6^a and will

next strike lever 18 and through rock-shaft 15 will actuate shipping-lever 10 to shift belt 9 from loose pulley 6 to fast pulley 5, thus automatically reversing the movement of the cable and the truck.

The evening up of the layers or folds at the right-hand end of the machine or the feed end of the table can be easily attended to by the workman who operates the machine; but at the opposite or power end of the table it is preferred to use automatic devices for such purpose. To effect this, I provide a fold-laying arm arranged to vibrate over the piling-table A adjacent to the power end thereof, as indicated clearly by dotted lines in Fig. 2, (marked 27,) and said arm is secured to the upper end of a post 28, (for detail see Fig. 7,) loosely journaled near the edge of the piling-table. The lower portion of said post 28 is proivded with a thread, as at 28^a, and passes through a threaded ratchet-nut 29, loosely journaled in a bracket 29^a, secured to the under side of the table A, and on said post 28 is a crank-arm 28^b, having at its outer end an eye, through which passes the bent end of a link 30, the opposite end of link 30 being pivoted to a slide 31, adapted to move longitudinally at or adjacent to the edge of the piling-table A and within the path of the truck B. This slide 31 has a longitudinal cam-slot 31^a, in which a cam-pin 31^b engages, and is provided at its extremity with a catch or projection 31^c, adapted to engage with the projection e' of the truck B.

31^d indicates a spring arranged to hold the slide toward the feed end of the table and the fold-laying arm crosswise of the table.

32 indicates a second shaft provided at its upper end with a pinion 32^a, said shaft 32, journaled in the piling-table A adjacent to the arm-shaft 28 and so arranged that its pinion 32^a will engage a rack 33 on the side bar of truck B. The lower end of shaft 32 is provided with a crank-arm or disk and crank-pin 32^b, which is connected by a link or rod 34 with a ratchet 35 on shaft 28 and engages ratchet-nut 29 on said shaft. While the truck B is moving toward the right-hand or feed end of the table the spring 31^d, before referred to, holds the slide 31 toward the feed end of the machine and the fold-laying arm crosswise of the table, thus holding in place the fold of fabric at the power end of the piling-table A. On the return movement of the truck as it approaches the power end of the table the projection e' strikes the catch 31^c of slide 31 and overcomes spring 31^d, carrying the slide toward the power end of the machine, and at the same time the rack 33 comes in contact with pinion 32^a, and through shaft 32 and the intermediate connections rotates shaft 28 and moves the folding arm 27 to the side of the piling-table out of the way, where it remains until the cam-groove 31^a of the slide 31 and the cam-pin 31^b have released the catch 31^c from the truck, whereupon the spring 31^d retracts the slide 31 and again draws the fold-laying arm across the piling-table, the fold-laying arm 27 following after the truck B toward the power end of the table and at the same time taking the fold just laid and holding it in place until the truck has made another round trip. When the rack-bar 33 on the side of truck B engages pinion 32^a, it causes the shaft 32 to rotate, which motion is communicated through ratchet 35 to ratchet-nut 29, journaled in bracket 29^a, and as the post 28 is connected to slide 31 it cannot rotate, while the ratchet-nut 29 can. The post must necessarily be advanced endwise or vertically, and thus gradually raise the fold-laying arm 27 to accommodate the increasing thickness of the material on the piling-table.

In order to regulate the extent to which the rack 33 shall engage with pinion 32^a and operate shaft 32, said rack-bar 33 is made movable and adjustable at its rear end (see detail view, Fig. 9) by means of two or more thumb-screws 33^a, so that by turning said screws the side bar and rack 33 at its right hand can be pushed out for a greater or less part of its length to engage the pinion 32^a or can be drawn away from it, as desired. Sufficient play can be allowed shaft 32 in order to avoid any cramping of the pinion.

The devices heretofore described, though operated from the truck, have been connected with the piling-table or supported therefrom. I will now describe the truck and its adjuncts.

The truck B may be of any suitable form provided with suitable wheels *b b* and with a grip G for seizing the cable 4, previously described. Mounted on the truck is the cloth-holder C, which may be of any desired character. When the fabric is in the form of a roll, it is preferred to use a rod or shaft 37^a journaled at one end in a post 37 and at the other in a sliding-post 38, controlled by a brake-screw 39 and interposed disks 36^a, which bear on the ends of the roll, (all as clearly shown in Figs. 3, 4, and 6;) but when the fabric is wound on a board the heads or board-holders shown in Fig. 8 may be used. These holders consist of heads 37^b, having journals 37^c and board grooves 37^d, in the bottom of which are center pins 37^e. In use the heads are forced on the opposite ends of the board until the center pins 37^e bite the wood thereof, after which the journals 37^c 37^c are inserted in the fixed post 37 and the sliding post 38 of the brake mechanism, and the brake-screw 39 is tightened up to hold the cloth and prevent the fabric from unrolling too fast. In the case of Denim's and like fabrics, or those which are simply folded, the cloth is spread out flat on body of the truck B.

At the upper part of the truck B and near its forward end is a cross-bar 40, (see Fig. 1,) and directly in front thereof is an apron 41, which apron extends down toward a second cross-bar 42, (see Fig. 4,) located between the apron and the laying-rolls 43 43^a. On each of said cross-bars 40 and 42 are movable gages 40^a, and said cross-bars may be rendered mov-

able for the insertion of the fabric by means of a hinge connection 42^a at one end and a bolt 42^b at the other end, as clearly shown on bar 42 in Fig. 4 of the drawings.

To the forward end of the truck B are attached by bolts or in other suitable manner the two end plates E E or housings of the rolls 43 43^a, each of which has two slots *e e* for the passage of the ends of the shafts of the cloth-laying rolls 43 43^a, and each of which housings is formed on its outer face to serve as a guide or way for the movable journal-boxes 44 of the cloth-laying rolls. As shown in the drawings, these end plates E E or housings, their slots, and guideways are all curved on circles struck from the axle of the forward wheels as the center, because it is preferred to drive these cloth-laying rolls by belts from pulleys on the forward axle of the truck; but other means of driving the cloth-laying rolls 43 43^a may be used and the form of the housings E E changed accordingly. The cloth-laying rolls 43 43^a are preferably positively driven in reverse direction, one 43 by a straight belt 45 from a pulley on the forward axle, as shown in Fig. 1, and the other roll 43^a by a twisted or crossed belt 45^a on the opposite side and from a second loose pulley on the axle-shaft, as shown in Figs. 3 and 5, suitable means (not shown) being provided for shipping the belts on the reversal of the travel of the truck.

In lieu of belts, chains and sprocket-wheels may be used, all of which will be well understood by the skilled mechanic without further description.

The cloth-laying rolls 43 and 43^a are covered with rubber, as indicated at *r*, Fig. 5, in order to insure a positive delivery and avoid any slipping of the fabric in the bite of the laying-rolls.

In order to cause the gradual raising of the feed-rolls 43 43^a to accommodate the gradually-increasing thickness of the fabric on the piling-table, I make the journal-boxes 44 of the rolls movable in the housings or end plates E E, as before specified, and pivot thereto vertical rack-bars 46, (see Fig. 5,) which engage with pinions 47 on a shaft 48, journaled in the upper end of the housings or end plates E E. Secured to the outer end of the said shaft 48 is a ratchet-wheel 49 and a swinging arm 50, having a pawl 51, which engages with the ratchet-wheel, and secured to the lower end of the swinging arm 50 is a section 50^a thereof so pivoted thereto by a knuckle-joint as to form a rigid continuation of arm 50 when moving toward the power, (or from the feed end of the table,) but to yield on the return travel of the truck or when it is moving away from the power end of the table. This extension-section 50^a extends down below the top of the piling-table and travels along the side thereof, and in the piling-table at a suitable distance from the feed end thereof (see Figs. 3 and 5) is formed a vertical series of holes 52 for the reception of a peg 52^a, which peg operates the swinging section 50^a, vibrating it more or less, according to the position of the peg 52^a.

It will be readily understood from the above description that when the truck moves from the right or feed end of the piling-table toward the power the swinging arms 50 50^a will strike peg 52^a, and this through the medium of pawl 51 and ratchet-wheel 49 will partly rotate shaft 48 and pinion 47, so as to slightly raise the rack 46 and the bearings 44 with the rolls journaled therein. The return motion of shaft 48 can be restrained by the usual reversely-arranged pawl (see 51^a, Fig. 5) or any other suitable means, and the extent of the rotation of shaft 48 can be regulated by the position of peg 52^a, which can be changed from one hole to another of series 52. When the truck B has passed the peg 52^a sufficiently far to release arm 50 50^a, it will swing back into its normal position, and on the return travel of the truck, or as it moves from the power toward the feed end of the piling-table A, the knuckle-joint between the sections 50 50^a will yield and permit the parts to pass without actuating shaft 48.

The construction of the apparatus being substantially such as hereinbefore specified, its operation will be as follows: The supply-roll or equivalent supply-bundle of the fabric being placed in the carrier C or on the truck B, as the case may be, the truck being at the right-hand or feed end of the table, where the operator stands, the leading end of the fabric is passed (see Fig. 1) under bar 40, over apron 41, under bar 42, (see Fig. 4,) thence between the cloth-laying rolls 43 43^a, and secured at the feed end of the table. The operator then moves the pivoted hand-lever 12, as hereinbefore specified, to start the truck moving toward the power end of the piling-table, and the cloth-laying rolls 43 43^a, receiving a positive or driven motion by means of the cross-belt or otherwise, will lay a thickness of the fabric from the feed or right-hand end of the table to the power end thereof. As the truck approaches the power end of the table the projection *e'* of the housing E strikes the catch 31^c of slide 31, carrying the slide with the truck B, and thus overcomes spring 31^d, and at the same time rack-bar 33 engages pinion 32^a, thus rotating shaft 28 and withdrawing the folding arm 27 from across the piling-table. By the time this is done the cam-pin 31^b has forced the slide 31 down until the catch 31^c has escaped from projection *e'* of housing-plate E, whereupon the spring 31^d retracts the slide 31 and rotates the fold-laying arm 27 reversely or back across the table A. This movement of the truck B, which has brought rack 33 in contact with pinion 32^a on shaft 32 and rotated said shaft through link 34, ratchet 35, and ratchet-nut 29, has also raised shaft 28 the desired distance to carry the fold-laying arm up to accommodate the thickness of material on piling-table A. In the meantime truck B, in its movement

toward the power end of the machine, has first struck crank-arm 26 (see Fig. 2) and through levers 23 22, link 21, and shipping-lever 10^a shifted cross-belt 9^a from fixed pulley 5^a to loose pulley 6^a and then struck lever 18 and through link 17, rock-shaft 15, and shipping-lever 10 shifted belt 9 from loose pulley 6 to fixed pulley 5, thus reversing the movement of cable 4 and truck B simultaneously with the return of fold-laying arm 27. The truck B then travels from the power to the feed end of the table and lays a second layer of fabric, which is evened up at the feed end by the operator, who reverses the machine for its next round trip.

It will be readily seen from the above description that the piling-table can be of any desired length and the whole apparatus easily operated by a single workman. The one I have in use is about one hundred feet long, and with a boy as operator cloth to the thickness of one hundred or more layers can be placed more rapidly and uniformly than can be done by several men with the apparatus now commonly employed for such purposes.

Having thus described my invention, what I claim, and desire to secure by Letters Patent, is—

1. In a piling-machine, the combination, with the piling-table, of a vibrating fold-laying arm adapted to swing in a plane parallel with and over said table and means for actuating said fold-laying arm, substantially as and for the purposes specified.

2. In a piling-machine, the combination, with a piling-table, of a fold-laying arm arranged at one end thereof, a cloth-truck adapted to travel on the piling-table, and means for actuating the fold-laying arm from the cloth-truck, substantially as and for the purposes specified.

3. In a piling-machine, the combination, with a piling-table, of a cloth-carrying truck mounted on the table, a cable for actuating said truck, reversing mechanism for said cable, levers at the feed end of the table for actuating the reversing mechanism, and means on the truck for actuating the reversing mechanism independently of the levers, substantially as and for the purposes specified.

4. In a cloth-piling machine, the combination, with the power-driven cable and its power driving mechanism, of reversing mechanism composed of the pivoted levers 10, 10^a, and 22, hand-levers 12 and 12^a, arranged near the feed end of the table, and suitable intermediate connections, substantially as and for the purposes specified.

5. In a piling-machine, the combination, with the power-driven cable and the power driving mechanism, of automatic shifting mechanism composed of shifting-levers 10, 10^a, and 22, the bell-crank levers 14, 15, and 16 and 24, 25, and 26, and suitable intermediate connections, substantially as and for the purposes specified.

6. In a piling-machine, the combination, with the piling-table, of a vertically-adjustable vibrating fold-laying arm arranged at one end of the piling-table and means for actuating said arm, substantially as and for the purposes specified.

7. In a piling-machine, the combination, with a piling-table, of a vibrating fold-laying arm, a post for the same, and a slide for actuating the post and its arm, substantially as and for the purposes specified.

8. In a piling-machine, the combination, with a piling-table, of a vibrating fold-laying arm, a post therefor, and a spring-retracted slide for actuating the post and its arm, substantially as and for the purposes specified.

9. In a piling-machine, the combination, with a piling-table and a truck arranged to travel thereon, of a vibrating fold-laying arm, a slide for actuating the vibrating arm, said slide having a catch adapted to engage a projection on the truck, substantially as and for the purposes specified.

10. In a piling-machine, the combination, with a piling-table and a truck arranged to travel thereon, of a vibrating fold-laying arm, a slide for actuating the vibrating fold-laying arm, said slide provided with a catch for engaging a projection on the truck, and a cam-slot for disengaging the catch from said projection on the truck, substantially as and for the purposes specified.

11. In a piling-machine, the combination, with a piling-table and a truck arranged to travel thereon, of a fold-laying arm, a spring-retracted slide for actuating said fold-laying arm, said slide provided with a catch for engaging the truck, and a cam for disengaging the catch of the slide from the truck, substantially as and for the purposes specified.

12. In a piling-machine, the combination, with a piling-table and a truck arranged to travel thereon, of a fold-laying arm having a threaded post, a ratchet-nut, a second post arranged in the path of the truck to be rotated thereby, and a ratchet actuated from said second post and which engages the ratchet-nut on the post of the fold-laying arm, substantially as and for the purposes specified.

13. In a piling-machine, the combination, with a piling-table and traveling truck therefor, of cloth-laying rolls mounted on the traveling truck and means for actuating the rolls from the axle of the truck, substantially as and the purposes specified.

14. In a piling-machine, the combination, with a piling-table and a traveling truck therefor, of adjustable cloth-laying rolls mounted in housings on the truck, said rolls being adjustable in an arc of a circle described from the front axle of the truck, substantially as and for the purposes specified.

15. In a piling-machine, the combination, with a piling-table and a truck arranged to travel thereon, of cloth-laying rolls adjustably journaled in housings on the truck and means for automatically elevating said rolls

from the piling-table, substantially as and for the purposes specified.

16. The combination, with a truck for piling-machines, of movable roll-bearings, cloth-laying rolls journaled therein, a rack and pinion for moving said bearings, and a pendent arm and ratchet mechanism for actuating the pinion which moves the rack, substantially as and for the purposes specified.

17. The combination, with a truck for piling-machines, of movable roll-bearings, cloth-laying rolls journaled therein, a rack and pinion for moving said bearings, and a knuckle-jointed pendent arm and ratchet mechanism for actuating the pinion which moves the truck, substantially as and for the purposes specified.

18. In a cloth-piling machine, the combination, with the piling-table and a cloth-truck arranged to travel thereon, of cloth-laying rolls adjustably journaled in juxtaposition to the front wheels of said truck, and belts for driving said cloth-laying rolls from the axle of the truck, substantially as and for the purposes specified.

19. The combination, with the truck of a piling-machine, of movable roll-bearings arranged segmentally thereon, cloth-laying rolls journaled in said movable bearings, and belts for driving said cloth-laying rolls from the axle of the truck, substantially as and for the purposes specified.

In testimony whereof I affix my signature, in presence of two witnesses, this 26th day of February, 1891.

FRANK H. DOBECK.

Witnesses:
W. N. WILLIAMS,
C. W. DOUD.