May 12, 1959 P. S. DICKEY 2,886,201

INDICATING SYSTEM

Original Filed Dec. 16, 1950

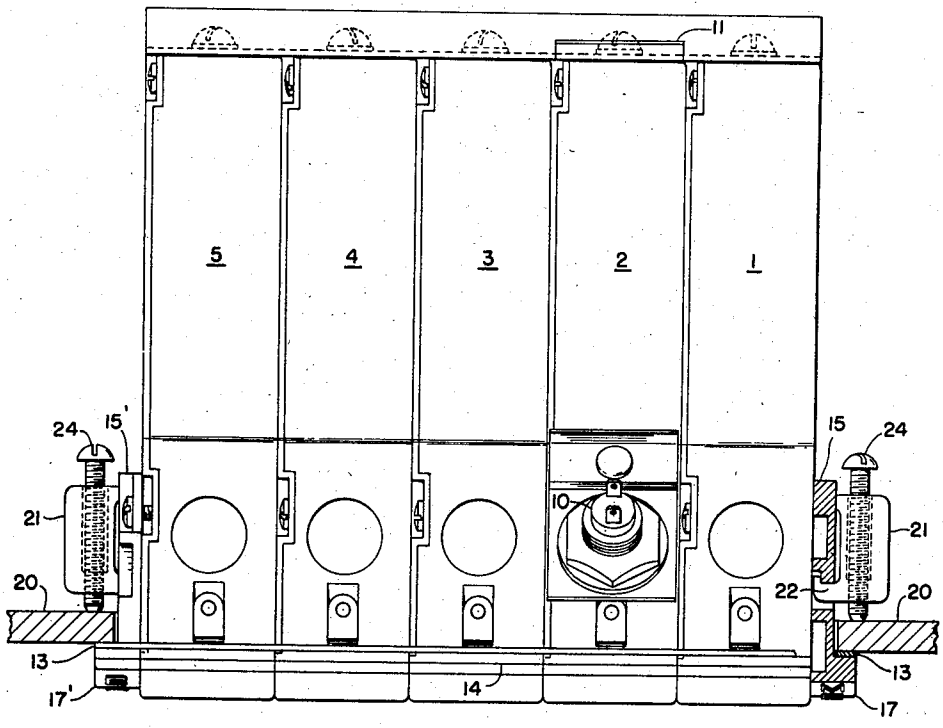

FIG. 2

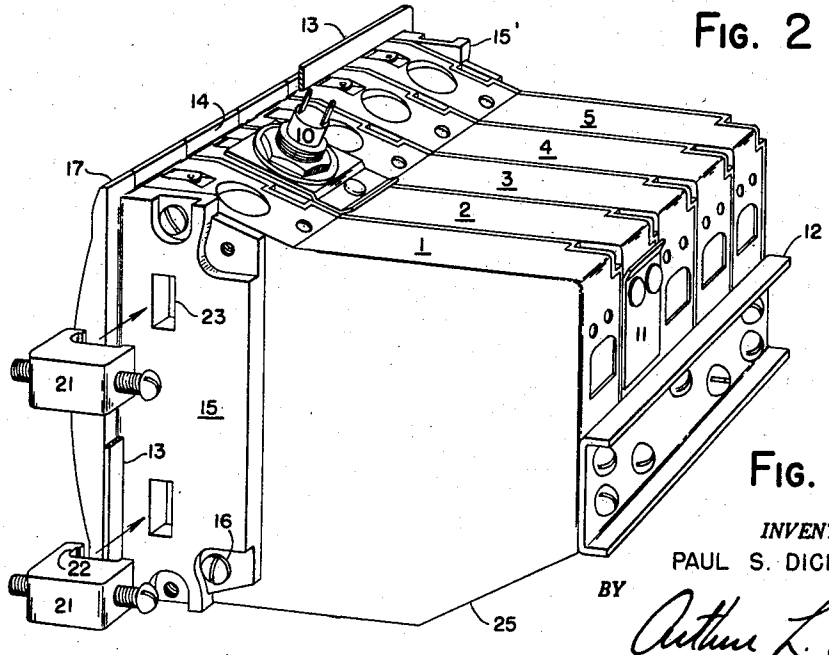

FIG. 1

INVENTOR.
PAUL S. DICKEY
BY
Arthur L. Wade
ATTORNEY

United States Patent Office 2,886,201 Patented May 12, 1959

2,886,201

INDICATING SYSTEM

Paul S. Dickey, East Cleveland, Ohio, assignor to Bailey Meter Company, a corporation of Delaware

Original application December 16, 1950, Serial No. 201,146. Divided and this application September 5, 1956, Serial No. 608,145

2 Claims. (Cl. 220—3.6)

This application is a division of my application Serial No. 201,146, filed December 16, 1950, now abandoned.

My invention relates generally to improvements in multiple instruments and particularly to improvements in instrument housings or casings and the mounting means therefor.

In the operation and/or control of power producing and/or utilizing apparatus, numerous indicating means are employed to manifest the instantaneous values of variable conditions, positions and the like. The manifestations of the indicating means provide useful tools by means of which an operator may tell at a glance if the apparatus is operating or functioning in the proper manner. If these manisfestations are grouped in an advantageous manner, so that multiple manifestations can be observed at a single glance, the tools become more useful and effective. It is often very hard to group together and to mount upon a control panel board or console, individual instruments to achieve the desired visual perfection.

By means of my invention, however, multiple indicating instruments may readily be grouped together and be mounted on control panels or consoles in such a manner as to allow a greater number of indicia to be observed by an operator at a single glance than has been possible heretofore.

One object of my invention is to provide independent housing or casing means of a similar shape, each capable of retaining one or more indicating instruments and so constructed that the independent housings and their retained instruments are capable of being stacked to provide a multiple instrument unit.

Another object is to provide mounting means for the multiple units whereby said units may be readily mounted on control panels or consoles with a minimum of time and effort.

Still another object is to provide for the assembling and mounting of the greatest number of multiple instrument units with a minimum number of parts.

In the drawings:

Fig. 1 is a perspective view of a five-unit multi-point indicator. The view is from the rear of the assembly as it would be mounted upon a panel board.

Fig. 2 is a plan view of the group of Fig. 1, Figs. 1 and 2 being useful to show the preferred constructional features providing the possibility of group mounting a plurality of indicating units.

Referring now to Fig. 1, I show therein a perspective view of a five-unit multi-point indicator (viewed from the rear) as it might be mounted upon a steel panel board in such manner that the indication scales and pointers are substantially flush with the face of the panel board for observation in interrelation. I designate the five units by the numerals **1**, **2**, **3**, **4** and **5** and would observe that the units are substantially identical as to shape and internal constructional operation and are therefore interchangeable insofar as the present assembly is concerned or for assembly in other desired grouping. The only departure from uniformity of the five units is in the actual scale marking which preferably conforms to the range of actual values of the variable being indicated. I have shown in Fig. 1 (in connection with unit **2**) the possibility of one or two structural features which may be incorporated in any or all of the units. For simplicity I have shown this only in connection with a single unit. Furthermore, I have shown those mechanical elements common to any multiple unit, whether five-unit, ten-unit or any multiple-unit, useful in the grouping together of a plurality of such units and the assembly of such a multi-unit upon a supporting panel board structure.

Preferably the five units are alike and interchangeable except for the scale plate marking. Details of the internal construction and operation are disclosed and claimed in the copending application of T. A. Green et al., Serial No. 176,382, filed July 28, 1950, now abandoned, so that it appears unnecessary to go into detail herein in regard thereto. It may be said that, in general, a Bourdon tube within the unit is receptive of a transmitted fluid pressure preferably in the range 0–30 p.s.i. and is adapted to position an indicating pointer throughout a predetermined maximum travel relative to an indication scale for a variation of pressure within the Bourdon tube of from 0 to 30 p.s.i. Any desirable means for converting the actual value of the variable to a representative fluid pressure within the range 0–30 p.s.i. may be used but I preferably employ the mechanism and system disclosed and claimed in my copending application Serial No. 195,524, filed November 14, 1950, now Patent 2,697,351.

The referred-to copending application of T. A. Green et al. discloses in greater detail the possibility of providing each of the units with internal illumination as by the light assembly **10** (Figs. 1 and 2). Furthermore, the Green et al. application discloses the cover plate element **11** useful for closing the access opening for the zero and range adjustments of the gage unit. For simplicity I have shown the elements **10** and **11** only in connection with unit No. **2** although it will be understood that they may be applied to any or all of the five units illustrated in Figs. 1 and 2.

Across the rear of the assembly I provide a tie bar **12** which is cut to a length determined by the number of units in the group. A picture frame strip **13** (shown broken away in Fig. 1) is provided for one-unit, two-unit, ten-unit, etc. assemblies, and is moved into position against the back of unit projections **14** after the end plates **15**, **15'** are fastened to end units **1** and **5** respectively, as by screws **16**. The end plates **15**, **15'** satisfy two purposes. They provide a decorative end strip **17**, **17'** and also provide means for firmly clamping the assembly to the panel board.

Preferably the multi-point group is assembled by placing the requisite number of units (in this case five) against each other, fastening the tie bar **12** across the rear, and then sliding the picture frame strip **13** forwardly until it rests against the top and bottom unit projections **14** as well as the end plates **15**, **15'**. The now self-sustaining assembly is entered from the panel front through a cutout having a slightly greater opening than the internal dimensions of the strip **13**, until the strip **13** engages on all four sides with the front of the panel **20** which may be of ¼" steel plate for example.

For firmly supporting the assembly I show a plurality (in this case four) of clamps **21**, each provided with a hook end **22** engageable in an opening **23** of the end plates **15**, **15'** as is clearly shown in Figs. 1 and 2. The clamps **21** have jack screws **24** bearing against the back side of panel **20**. After the hook end **22** is inserted in opening **23** of end plate **15**, the screw **24** is turned into engagement with panel **20** pulling the assembly through

the panel opening until strip 13 uniformly seals the opening at the front.

The individual gage units are provided with one or two (as needed) pressure taps along the bottom surface 25 to which may be connected the pipe transmitting the fluid pressure representative of the variable to be indicated.

What I claim as new and desire to secure by Letters Patent of the United States is:

1. A multiple instrument and mounting therefor comprising, a plurality of instrument units having separate independent housing of similar shape stacked together to define a multiple unit of generally rectangular configuration, a front face portion for each instrument unit at one end thereof providing a flange over two opposite sides of said one end, said face portions providing a flange surface over two opposite sides of said multiple unit at one end of said multiple unit upon stacking of the individual units, a thin picture frame metallic strip closely encircling said multiple unit at said one end thereof against the rear surface of said flanges, a tie bar secured to the other ends of said units and cooperating with said picture frame strip to hold said instrument unit in said stacked relationship, a pair of side plates secured to a pair of oppositely disposed sides of said multiple unit, each of said side plates having a flange formed thereon which aligns with said flanges of said units, said side plates being confined within said picture-frame metallic strip and each provided with a clamp receiving recess, an instrument panel having an aperture therein of slightly larger dimension than the multiple unit for receiving said multiple unit, the rear surface of said flanges facing the front surface of said panel about said aperture and retaining said picture frame strip between said surface and said flanges, and a plurality of clamping members mounted between said panel and said recesses for holding said multiple unit in clamped condition within said panel aperture with said face portions substantially flush with said panel.

2. A multiple instrument and mounting therefor, comprising, an instrument panel having an aperture therein, a plurality of independent instrument units having separate housing of similar shape stacked together to define a multiple unit of generally rectangular configuration and of slightly smaller dimension than the aperture of the panel, a front face portion for each instrument unit at one end of its housing having a flange formed thereon, said face portions being aligned upon stacking of said units to provide a flange over at least two opposite sides of said multiple unit, the rear surface of said flange of said multiple unit facing the front surface of said panel about said aperture, a thin metallic member closely encircling said multiple unit at said one end thereof adjacent said face portions, a tie member secured to the other ends of said instrument housings and cooperating with said metallic member to hold said instrument units in said stacked condition, and clamping means for retaining said multiple unit in said aperture with said face portions substantially flush with said panel.

References Cited in the file of this patent

UNITED STATES PATENTS

1,831,732	Allen	Nov. 10, 1931
1,960,241	Deerwester	May 29, 1934
1,967,483	Soller	July 24, 1934
2,562,260	Caldwell	July 31, 1951
2,639,686	Duncan	May 26, 1953
2,766,955	Dallimonti	Oct. 16, 1956

OTHER REFERENCES

"Hays Indicating and Recording Gages," copyright 1935, by the Hays Corporation, Michigan City, Indiana.