(19) Europäisches Patentamt
European Patent Office
Office européen des brevets

(11) Publication number: **0 502 645 B1**

(12) # EUROPEAN PATENT SPECIFICATION

(45) Date of publication of patent specification: **19.04.95**

(51) Int. Cl.[6]: **B65B 55/10**, B65B 31/04

(21) Application number: **92301609.1**

(22) Date of filing: **26.02.92**

(54) **Method and apparatus for drying a container with a hot gaseous fluid.**

(30) Priority: **02.03.91 GB 9104442**

(43) Date of publication of application:
09.09.92 Bulletin 92/37

(45) Publication of the grant of the patent:
19.04.95 Bulletin 95/16

(84) Designated Contracting States:
DE GB IT SE

(56) References cited:
GB-A- 921 684

(73) Proprietor: **ELOPAK SYSTEMS AG**
Cherstrasse 4
Postfach
CH-8152 Glattbrugg (CH)

(72) Inventor: **Backe, Thorleif**
Vargveien 18
N-3030 Konnerud (NO)

(74) Representative: **Burrows, Anthony Gregory et al**
Business Centre West
Avenue One, Business Park
Letchworth Garden City
Hertfordshire SG6 2HB (GB)

Note: Within nine months from the publication of the mention of the grant of the European patent, any person may give notice to the European Patent Office of opposition to the European patent granted. Notice of opposition shall be filed in a written reasoned statement. It shall not be deemed to have been filed until the opposition fee has been paid (Art. 99(1) European patent convention).

EP 0 502 645 B1

Description

This invention relates to introduction of fluid, for example drying an internal surface of a sleeve with a gaseous fluid.

EP-A-0361858 discloses an aseptic packaging system in which cartons are indexed along an aseptic chamber through which a main stream of aseptic air flows from a main inlet to a main outlet. At sterilizing stations, hydrogen peroxide is sprayed into the cartons and the cartons pass under UV germicidal lamps. Then, at a peroxide-removing station, a second stream of aseptic air is introduced, in a heated state and through a secondary inlet in the form of a nozzle, into the cartons to vapourize residual peroxide and the second stream, carrying the peroxide, is drawn off through a secondary outlet into a peroxide recovering circuit leading, via a condenser, a filter, a fan and a heater to the secondary inlet. The nozzle is a vertical cylindrical pipe and has the disadvantage that the single, vertically downward stream of hot air entering the carton centrally creates an air cushion in the bottom of the carton interior so that the hot air does not flow over the internal surface of the carton bottom, with the result that not all of the sprayed-in peroxide is removed from the carton.

EP-A-0375166 discloses a sterilization system in which an H_2O_2 solution is sprayed into open ends of stepwise-advancing cartons, the cartons are heated by hot air as they continue to advance stepwise, thus promoting sterilization of the internal surfaces of the cartons, and are then dried in a drying section by directing hot sterile air into the open ends of the cartons to vapourize the H_2O_2 solution. The internally dried cartons are then filled and their open ends sealed. A heat plenum in the drying section serves to provide sterile air through a plurality of outlets into the open tops of the cartons. Specifically, the outlets are variously offset from the vertical axes of the respective cartons as they dwell beneath the outlets, providing a sweeping pattern of the sterile air in the cartons. This pattern consists in the stream of air from the outlet directly above the carton flowing over the inside surface of one side of the carton in a direction towards its closed end, thence over the inside surface of the closed end and thence over the inside surface of an opposite side of the sleeve in a direction away from the closed end. This system considerably reduces the tendency for an air cushion to form in the bottom of the carton, but further reduction of that tendency would be advantageous.

DE-A-3229383 discloses a system for the removal of particles from cup-shaped containers, in which heated sterile air is fed under pressure to the zone of the cup mouth, concentrated into an annular jet blown down the inner peripheral surface of the cup to the bottom of the cup and then drawn upwardly into a central suction duct in contraflow to the annular jet down the inner peripheral surface. The sterile air is ionised immediately before entering the cup and a very small amount of H_2O_2 is added in a finely atomised form to the sterile air before the latter is ionised. This system may work satisfactorily for a cup with a downwardly converging inner peripheral surface and with a depth roughly equal to its width, but not satisfactorily for a carton with parallel sides and with a depth equal to more than twice its width.

DE-A-3339930 discloses a system similar to that of DE-A-3229383, but the sterilized cups are then dried by a hot sterile air jet-and-suction contraflow arrangement the same as that used for the H_2O_2/sterile air mixture. Such drying arrangement may work satisfactorily for the cups but not for a carton with parallel sides and with a depth equal to more than twice its width.

GB-A-921684 discloses a system for filling containers, in this case cans or bottles, with a carbonated liquid, such as beer. In order to purge the containers of shop air prior to filling, a filling nozzle includes a gas passage which, in the lower portion of the nozzle is sub-divided into a plurality of gas passages opening around the periphery of the lower end of the nozzle among liquid nozzle tips. The common gas passage communicates at its lower end with a manifold connected to the plurality of gas passages which downwardly diverge away from each other. The filling nozzle has a central venting duct which leads to atmosphere via a venting valve. The purging gas flows as jets down the inner peripheral surface of the container and then towards the central vertical axis of the container and upwardly into the venting duct.

According to a first aspect of the present invention, there is provided a method of drying a sleeve having a closed end, comprising causing hot gaseous drying fluid to flow over the inside surface of one side of the sleeve in a direction towards said closed end, thence over the inside surface of said closed end and thence over the inside surface of an opposite side of said sleeve in a direction away from said closed end, characterized in that the hot gaseous drying fluid flowing over the inside surface of said one side is in the form of a plurality of jets.

According to a second aspect of the present invention, there is provided apparatus for drying a sleeve having a closed end, comprising heating means for heating a gaseous drying fluid, nozzle means, and ducting serving to lead hot gaseous drying fluid from said heating means to said nozzle means, said nozzle means being so orientated as to cause hot gaseous drying fluid to flow over the inside surface of one side of the sleeve in a direc-

tion towards said closed end, thence over the inside surface of the closed end and thence over the inside surface of an opposite side of said sleeve in a direction away from said closed end, characterized in that said nozzle means comprises a plurality of nozzle outlets, so that the hot gaseous drying fluid flowing over said inside surface of said one side is in the form of a plurality of jets.

Owing to the invention it is possible to reduce any tendency for an air cushion to form in the interior of the sleeve at its closed end.

In order that the invention may be clearly understood and readily carried into effect, reference will now be made, by way of example, to the accompanying drawings, in which:-

Figure 1 shows a top plan view of a drying nozzle of an aseptic packaging machine and of a carton being dried thereby, and

Figure 2 shows a fragmentary side elevation of the carton and of a section through the nozzle taken on the line II-II of Figure 1.

The nozzle to be described with reference to the drawings is a modification of the nozzle E shown in, for example, Figure 2 of EP-A-0361858, to which reference may be made for details of associated parts of the drying system not described herein.

Referring to the drawings, the nozzle 1 is vertical and has a relatively wide coaxial bore 2 extending from the top end of the nozzle 1 to a level intermediate the top and bottom ends of the nozzle. At the intermediate level are inlet mouths 3 of four bores 4 terminating in respective outlet mouths 5 at the bottom end of the nozzle 1. Below the nozzle is shown a flat-or gable-topped, liquid packaging carton 6 of a conventional character. It is in the form of a square-section sleeve, with a horizontal, bottom end closure 8 and its depth is at least twice its width.

The carton 6 is one of a plurality of cartons which are advanced stepwise in the direction of the arrow A in Figure 2. They are brought in turn to the position shown, in which the sleeve 7 and the nozzle 1 have a common, vertical, longitudinal axis B. The longitudinal axes C of the bores 4 are parallel to each other and are oblique to the vertical axis B, being inclined at an angle of about 10° to the vertical. One pair of axes C lies in a vertical plane D, while the other pair of axes C lies in another vertical plane D. The planes D are of course parallel to each other. It will be noted that the outlet mouths 5 are directed towards the base 8 and are radially offset relative to the axis B, in fact are radially spaced from that axis. It will also be noted that the axes C are substantially tangential to imaginary vertical cylinders co-axial with the axis B and are inclined not only downwardly but also in the direction A of stepping advance of the cartons.

We have found that the nozzle E of the above-mentioned EP-A-0361858, which nozzle is a vertical cylindrical pipe, has the disadvantage that the single, vertically downward stream of hot air entering the carton creates an air cushion in the bottom of the interior of the carton, so that the hot air does not flow over the internal surface of the bottom of the carton, with the result that not all of the sprayed-in hydrogen peroxide is removed from the carton. In contradistinction, the nozzle 1 causes the incoming hot air to flow down one side panel 7' of the carton and the air/hydrogen peroxide vapour mixture to flow up the opposite side panel 7'', so that any tendency for an air cushion to form in the bottom of the carton is reduced and thus the hydrogen peroxide in the bottom of the carton is more fully removed. The obliquity of the axes C of course contributes greatly to this result, but also the fact that the single stream of hot air entering the nozzle is divided into a plurality of streams debouching into the carton further helps to reduce any tendency for an air cushion to form in the bottom of the carton.

Claims

1. A method of drying a sleeve (7) having a closed end (8), comprising causing hot gaseous drying fluid to flow over the inside surface of one side of the sleeve (7) in a direction towards said closed end (8), thence over the inside surface of said closed end (8) and thence over the inside surface of an opposite side of said sleeve (7) in a direction away from said closed end (8), characterized in that the hot gaseous drying fluid flowing over the inside surface of said one side is in the form of a plurality of jets.

2. A method according to claim 1, wherein said jets are parallel to each other.

3. A method according to claim 1 or 2, wherein said jets are directed obliquely towards said inside surface of said one side relative to a longitudinal axis (B) of said sleeve (7).

4. A method according to claim 3, wherein said sleeve (7) is advanced stepwise relative to said jets and said jets are directed inclinedly in the direction of advance (A) of the sleeve (7).

5. Apparatus for drying a sleeve (7) having a closed end (8), comprising heating means for heating a gaseous drying fluid, nozzle means (1), and ducting (2) serving to lead hot gaseous drying fluid from said heating means to

said nozzle means (1), said nozzle means (1) being so orientated as to cause hot gaseous drying fluid to flow over the inside surface of one side of the sleeve (7) in a direction towards said closed end (8), thence over the inside surface of the closed end (8) and thence over the inside surface of an opposite side of said sleeve (7) in a direction away from said closed end (8), characterized in that said nozzle means (1) comprises a plurality of nozzle outlets (5), so that the hot gaseous drying fluid flowing over said inside surface of said one side is in the form of a plurality of jets.

6. Apparatus according to claim 5, wherein said nozzle outlets (5) are directed parallelly to each other.

7. Apparatus according to claim 5 or 6, wherein said nozzle outlets (5) are directed obliquely to an intended position of a longitudinal axis (B) of said sleeve (7) during introduction of the hot gaseous drying fluid into said sleeve (7).

8. Apparatus according to claim 7, wherein said nozzle outlets (5) are directed tangentially to imaginary cylinders co-axial with said longitudinal axis (B).

9. Apparatus according to claim 7 or 8, and further comprising conveying means serving to advance said sleeve (7) stepwise relative to said nozzle outlets (5), said nozzle outlets (5) being directed inclinedly in the direction of advance (A) of said sleeve (7).

Patentansprüche

1. Verfahren zum Trocknen einer Hülse (7) mit einem geschlossenen Ende (8), umfassend das Herbeiführen des Fließens eines heißen gasförmigen Trocknungsfluids über die innere Oberfläche einer Seite der Hülse (7) in einer Richtung auf das geschlossene Ende (8) zu, von dort über die innere Oberfläche des geschlossenen Endes (8) und von dort über die innere Oberfläche einer entgegengesetzten Seite der Hülse (7) in einer Richtung weg vom geschlossenen Ende (8), dadurch gekennzeichnet, daß das heiße gasförmige Trocknungsfluid, das über die innere Oberfläche der einen Seite fließt, in Form einer Mehrzahl von Strahlen vorliegt.

2. Verfahren nach Anspruch 1, wobei die Strahlen parallel zueinander sind.

3. Verfahren nach Anspruch 1 oder 2, wobei die Strahlen schräg in Richtung der inneren Oberflache der einen Seite relativ zu einer Longitudinalachse (B) der Hülse (7) gerichtet sind.

4. Verfahren nach Anspruch 3, wobei die Hülse (7) in Bezug auf die Strahlen schrittweise vorgerückt wird und die Strahlen in Vorschubrichtung (A) der Hülse (7) schräg gerichtet sind.

5. Vorrichtung zum Trocknen einer Hülse (7) mit einem geschlossenen Ende (8), umfassend ein Mittel zum Erhitzen eines gasförmigen Trocknungsfluids, ein Düsenmittel (1) und Rohrsystem (2), das dazu dient, heißes gasförmiges Trocknungsfluid aus dem Mittel zum Heizen zum Düsenmittel (1) zu überführen, wobei das Düsenmittel (1) so orientiert ist, daß es das Fließen des gasförmigen heißen Trocknungsfluids über die innere Oberfläche einer Seite der Hülse (7) in Richtung des geschlossenen Endes (8) veranlaßt, von dort über die innere Oberfläche des geschlossenen Endes (8) und von dort über die innere Oberfläche der entgegengesetzten Seite der Hülse (7) in eine Richtung weg vom geschlossenen Ende (8), dadurch gekennzeichnet, daß das Düsenmittel (1) eine Mehrzahl von Düsen-Ausgängen (5) umfaßt, so daß das heiße gasförmige Trocknungsfluid, das über die innere Oberfläche der einen Seite fließt, in Form einer Mehrzahl von Strahlen vorliegt.

6. Vorrichtung nach Anspruch 5, wobei die Düsen-Ausgänge (5) parallel zueinander ausgerichtet sind.

7. Vorrichtung nach Anspruch 5 oder 6, wobei die Düsen-Ausgänge (5) während des Einführens des heißen gasförmigen Trocknungsfluids in die Hülse (7) schräg zu einer bestimmten Position einer Longitudinalachse (B) der Hülse (7) gerichtet sind.

8. Vorrichtung nach Anspruch 7, wobei die Düsen-Ausgänge (5) tangential auf imaginäre Zylinder, die coaxial zur Longitudinalachse (B) sind, gerichtet sind.

9. Vorrichtung nach Anspruch 7 oder 8, weiterhin umfassend eine Fördereinrichtung, die dazu dient, die Hülse (7) schrittweise relativ zu den Düsen-Ausgängen (5) vorzurücken, wobei die Düsen-Ausgänge (5) schräg zur Vorschubrichtung (A) der Hülse (7) gerichtet sind.

Revendications

1. Un procédé pour sécher une douille (7) présentant une extrémité fermée (8), comprenant le fait d'amener du fluide de séchage gazeux à s'écouler sur la surface interne d'un premier côté de la douille (7) en direction de ladite extrémité fermée (8), puis sur la surface interne de ladite extrémité fermée (8) et, de là, sur la surface interne d'un côté opposé de ladite douille (7) dans une direction éloignée de ladite extrémité fermée (8), caractérisé en ce que le fluide de séchage gazeux chaud s'écoulant sur la surface interne dudit premier côté présente la forme d'un ensemble de jets.

2. Un procédé selon la revendication 1, dans lequel lesdits jets sont parallèles l'un à l'autre.

3. Un procédé selon la revendication 1 ou 2, dans lequel lesdits jets sont dirigés obliquement vers ladite surface interne dudit premier côté par rapport à un axe longitudinal (B) de ladite douille (7).

4. Un procédé selon la revendication 3, dans lequel ladite douille (7) est avancée pas à pas par rapport auxdits jets et lesdits jets sont inclinés dans la direction d'avance (A) de la douille (7).

5. Appareil pour sécher une douille (7) présentant une extrémité fermée (8), comprenant des moyens de chauffage pour chauffer un fluide de séchage gazeux, des moyens à buse (1), et un conduit (2) servant à amener du fluide de séchage gazeux chaud depuis lesdits moyens de chauffage jusqu'auxdits moyens à buse (1), lesdits moyens à buse (1) étant orientés de manière à amener du fluide de séchage gazeux chaud à s'écouler sur la surface interne d'un premier côté de la douille (7) en direction de ladite extrémité fermée (8), puis sur la surface interne de l'extrémité fermée (8) et, de là, sur la surface interne d'un côté opposé de ladite douille (7) dans une direction éloignée de ladite extrémité fermée (8), caractérisé en ce que lesdits moyens à buse (1) comprennent un ensemble d'ajutages (5), de sorte que le fluide de séchage gazeux chaud s'écoulant sur ladite surface interne dudit premier côté présente la forme d'un ensemble de jets.

6. Appareil selon la revendication 5, dans lequel lesdits ajutages (5) sont dirigés parallèlement l'un à l'autre.

7. Appareil selon la revendication 5 ou 6, dans lequel lesdits ajutages (5) sont dirigés obliquement par rapport à une position prévue d'un axe longitudinal (B) de ladite douille (7) pendant l'introduction du fluide de séchage gazeux chaud dans ladite douille (7).

8. Appareil selon la revendication 7, dans lequel lesdits ajutages (5) sont dirigés tangentiellement à des cylindres imaginaires coaxiaux audit axe longitudinal (B).

9. Appareil selon la revendication 7 ou 8, et comprenant en outre des moyens de transport servant à faire avancer ladite douille (7) pas à pas par rapport auxdits ajutages (5), lesdits ajutages (5) étant dirigés de manière inclinée dans la direction d'avance (A) de ladite douille (7).

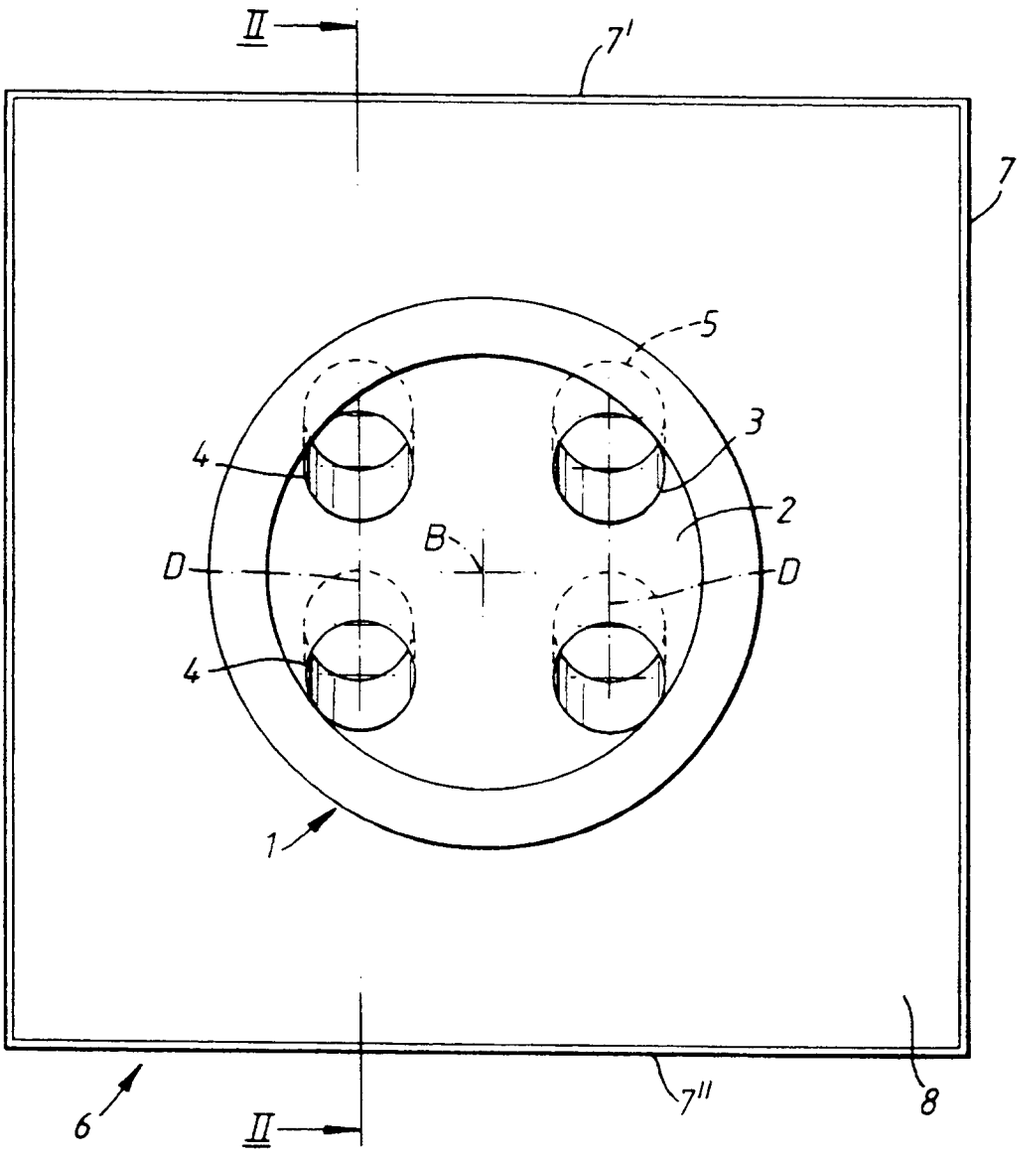

Fig.1.

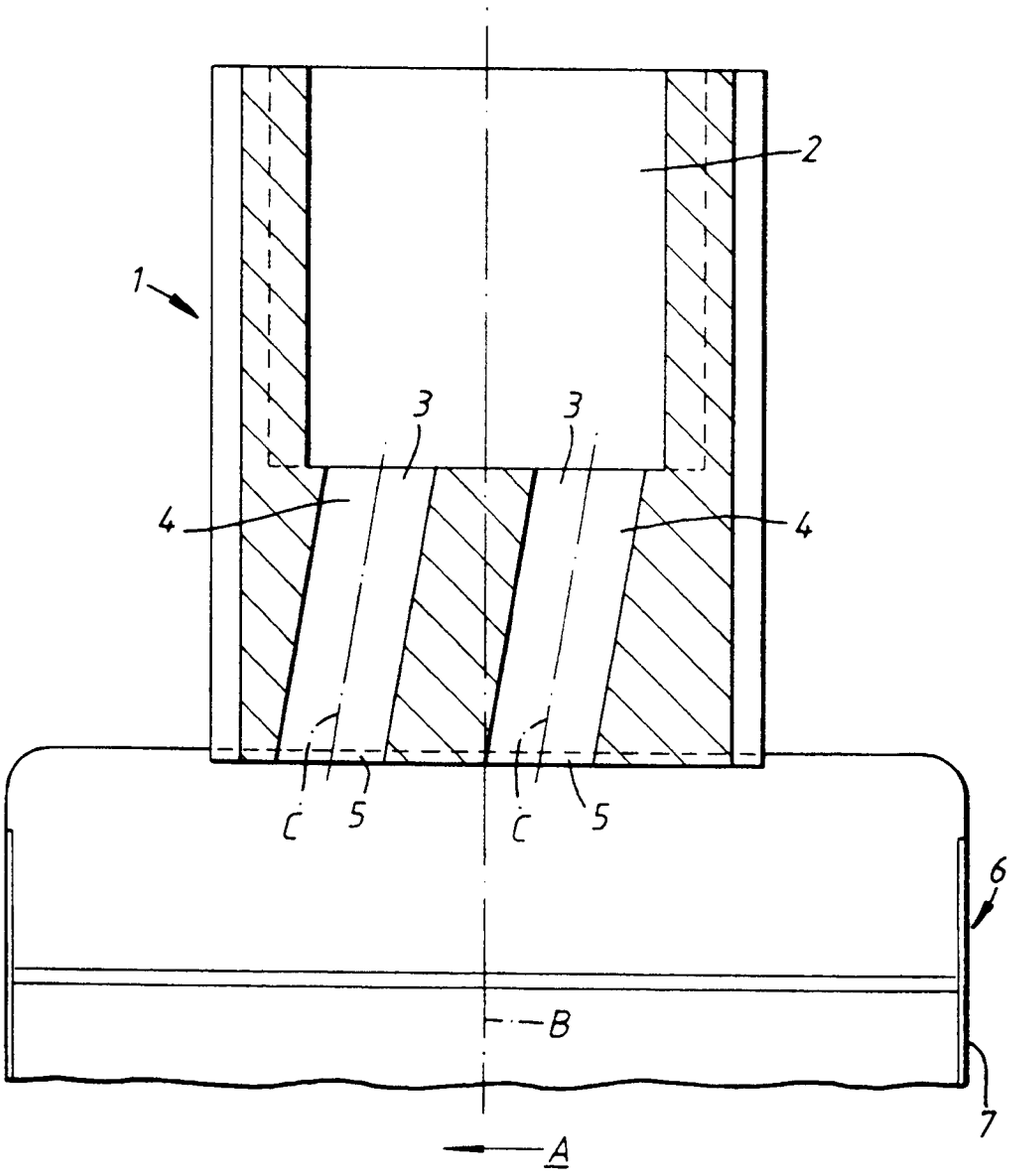

Fig.2.