(12) INTERNATIONAL APPLICATION PUBLISHED UNDER THE PATENT COOPERATION TREATY (PCT)

(19) World Intellectual Property Organization
International Bureau

(43) International Publication Date
06 September 2019 (06.09.2019)

WIPO | PCT

(10) International Publication Number
WO 2019/166358 A1

(51) International Patent Classification:
F24C 15/02 (2006.01)

(21) International Application Number:
PCT/EP2019/054550

(22) International Filing Date:
25 February 2019 (25.02.2019)

(25) Filing Language: English

(26) Publication Language: English

(30) Priority Data:
A 2018/02945 01 March 2018 (01.03.2018) TR

(71) Applicant: **ARCELIK ANONIM SIRKETI** [TR/TR]; Sutluce Karaagac Caddesi No: 2/6 Beyoglu, 34445 ISTANBUL (TR).

(72) Inventors: **GULBAY, Berrin**; Sutluce Karaagac Caddesi No: 2/6 Beyoglu, 34445 ISTANBUL (TR). **GOCER, Mehmet Baris**; Sutluce Karaagac Caddesi No: 2/6 Beyoglu, 34445 ISTANBUL (TR). **YAYLA, Sonat**; Sutluce Karaagac Caddesi No: 2/6 Beyoglu, 34445 ISTANBUL (TR). **CENGIZ, Osman**; Sutluce Karaagac Caddesi No: 2/6 Beyoglu, 34445 ISTANBUL (TR).

(81) Designated States *(unless otherwise indicated, for every kind of national protection available)*: AE, AG, AL, AM, AO, AT, AU, AZ, BA, BB, BG, BH, BN, BR, BW, BY, BZ, CA, CH, CL, CN, CO, CR, CU, CZ, DE, DJ, DK, DM, DO, DZ, EC, EE, EG, ES, FI, GB, GD, GE, GH, GM, GT, HN, HR, HU, ID, IL, IN, IR, IS, JO, JP, KE, KG, KH, KN, KP, KR, KW, KZ, LA, LC, LK, LR, LS, LU, LY, MA, MD, ME, MG, MK, MN, MW, MX, MY, MZ, NA, NG, NI, NO, NZ, OM, PA, PE, PG, PH, PL, PT, QA, RO, RS, RU, RW, SA,

(54) Title: AN OVEN COMPRISING FRENCH STYLE DOORS

Figure 3

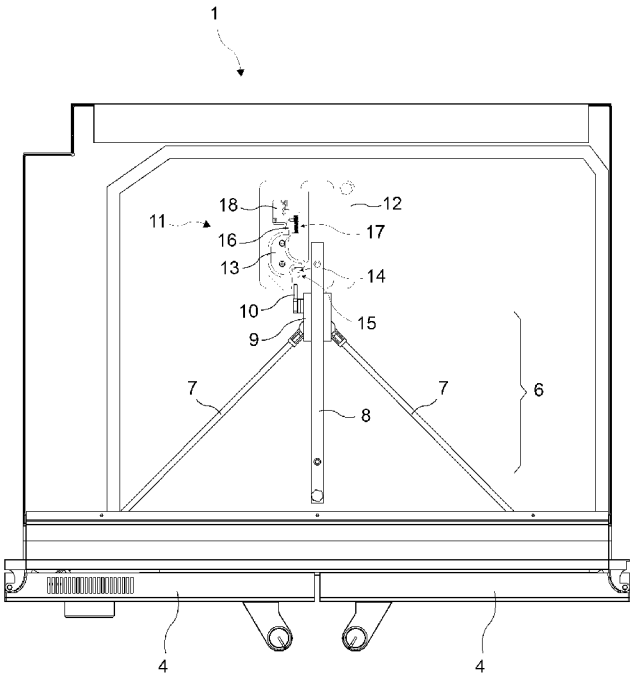

(57) Abstract: The present invention relates to an oven (1) comprising a body (2), two French style side-by-side doors (4) enabling access into the cooking chamber (3) in the body (2), connected to the front surfaces of the opposite right and left vertical edges of the body (2) by means of hinges (19) so as to be pivotable about the vertical axis, and a linkage mechanism (6) mounted on a horizontal plane (5) on the upper or the lower wall of the body (2), interconnecting the doors (4), enabling both doors (4) to be simultaneously opened by a user moving only one of the doors (4) and having - two link arms (7) symmetrically connected by their front ends to the doors (4) moving parallel to the horizontal plane (5), and extending from both doors (4) by converging to each other towards the rear edge of the horizontal plane (5), - a rail (8) fixed on the horizontal plane (5) in parallel to the horizontal plane (5) by means of a front support plate (20) and a rear support plate (21), and - a carriage block (9) to which the rear ends of the link arms (7) are connected,

WO 2019/166358 A1

[Continued on next page]

SC, SD, SE, SG, SK, SL, SM, ST, SV, SY, TH, TJ, TM, TN, TR, TT, TZ, UA, UG, US, UZ, VC, VN, ZA, ZM, ZW.

(84) **Designated States** *(unless otherwise indicated, for every kind of regional protection available)*: ARIPO (BW, GH, GM, KE, LR, LS, MW, MZ, NA, RW, SD, SL, ST, SZ, TZ, UG, ZM, ZW), Eurasian (AM, AZ, BY, KG, KZ, RU, TJ, TM), European (AL, AT, BE, BG, CH, CY, CZ, DE, DK, EE, ES, FI, FR, GB, GR, HR, HU, IE, IS, IT, LT, LU, LV, MC, MK, MT, NL, NO, PL, PT, RO, RS, SE, SI, SK, SM, TR), OAPI (BF, BJ, CF, CG, CI, CM, GA, GN, GQ, GW, KM, ML, MR, NE, SN, TD, TG).

Published:

— *with international search report (Art. 21(3))*

performing linear sliding motion on the rail (8), - a locking tab (10) connected to the carriage block (9), moving in the horizontal direction together with the carriage block (9) during opening and closing of the doors (4), and - a locking mechanism (11) activated by the locking tab (10), enabling the doors (4) to be kept fixed in the closed position, while to be released when the doors (4) are pulled with a force stronger than a given force.

Description

AN OVEN COMPRISING FRENCH STYLE DOORS

[0001] The present invention relates to an oven comprising French style doors positioned side-by-side.

[0002] Known oven doors are opened in up-down direction by being pivoted about the horizontal axis. The door of an oven is pulled outwards from the body by being held from its upper portion, and is brought to the horizontal and fully open position by being pivoted about the hinges with horizontal rotational axis provided on its lower edge. When the kitchen environment where the oven is being used lacks sufficient space, the area occupied by the door in horizontal position may create a problem for the users. In such a case, a user has to stand at the side of the oven to access the cooking volume when the oven door is fully opened. In the state of the art, ovens have been provided to solve this problem, comprising French style doors opening and closing by being pivoted about the vertical axis. In such type of ovens, symmetrically configured doors are used positioned side-by-side on the left and right sides. When one of the two French style side-by-side doors is opened and closed by a user, the other door also opens and closes simultaneously. A user can thus open both doors of the oven by a single hand, and can place into the oven the tray with the food products to be cooked thereon. Said simultaneous motion of French style doors is realized by a linkage mechanism coupling two doors to each other. These advantages of the French style doors are accompanied with certain disadvantages. Since a linkage mechanism consists of metal parts with rather high friction forces in between, a user has to apply a strong force to be able to open and close the doors. The doors closing simultaneously by means of a linkage mechanism are not able to provide a good sealing, therefore separate locking systems are used for each one of the doors.

[0003] Patent applications no. US2007039605 (A1) and US2009145031 (A1) disclose door linkage systems used in ovens having French style doors.

[0004] Patent application no. US2010206289 (A1) discloses locking systems in an oven, used separately for doors moving interdependently by means of a linkage system.

[0005] The aim of the present invention is to realize an oven comprising French style doors controlled by a linkage mechanism, having a locking mechanism enabling the doors to be kept closed so as not be opened under a given force.

[0006] The oven realized to achieve the aim of the present invention comprises two French style doors and a linkage mechanism provided on a horizontal plane on the upper or the lower wall of its body. The linkage mechanism enables both doors to be simultaneously opened or closed by a user pushing or pulling only one of the doors, and comprises two link arms connected to the doors, a carriage block to which the rear ends of the link arms are connected, and a rail on which the carriage block moves. The link arm connected to the door being opened or closed transmits its movement by means of the carriage block to the other link arm and therefore to the other door.

[0007] In the embodiment of the invention, the oven comprises a locking mechanism provided on the same plane as the linkage mechanism, operating by being triggered by a locking tab connected to the linkage mechanism, enabling the doors to be kept fixed in the closed position and to be released upon being pulled with a force stronger than a given force.

[0008] In an embodiment of the invention, the locking mechanism comprises a switch which switching to an on or off state during closing or opening of the doors, detecting whether the doors are sealingly closed or not.

[0009] The oven realized to achieve the aims of the present invention is illustrated in the accompanying drawings, wherein:

[0010] Figure 1 is a perspective view of an oven, linkage mechanism and a locking mechanism with the doors in closed position.

[0011] Figure 2 is a perspective view of an oven, linkage mechanism and a locking mechanism with the doors in open position.

[0012] Figure 3 is a view from above of an oven, linkage mechanism and a locking mechanism with the doors in closed position.

[0013] Figure 4 is a view from above of an oven, linkage mechanism and a locking mechanism with the doors in open position.

[0014] Figure 5 is a detail view of the locking mechanism with the doors in open

position.

[0015] Figure 6 is a detail view of the locking mechanism with the doors in closed position.

[0016] The elements in the figures are numbered individually and the correspondence of these numbers are given hereinafter.

1. Oven
2. Body
3. Cooking chamber
4. Door
5. Horizontal plane
6. Linkage mechanism
7. Link arm
8. Rail
9. Carriage block
10. Locking tab
11. Locking mechanism
12. Mounting plate
13. Cam member
14. Recess
15. Retainer
16. Cam follower
17. Spring
18. Switch
19. Hinge
20. Front support plate
21. Rear support plate
22. Hole

[0017] The oven (1) comprises a body (2), two French style side-by-side doors (4) enabling access into the cooking chamber (3) in the body (2), connected to the front surfaces of the opposite right and left vertical edges of the body (2) by means of hinges (19) so as to be pivotable about the vertical axis, and a linkage mechanism (6) mounted on a horizontal plane (5) on the upper or the lower wall of the body (2), interconnecting the doors (4) and

enabling both doors (4) to be simultaneously opened by a user moving only one of the doors (4).

[0018] The link mechanism (6) comprises two link arms (7) symmetrically connected by their front ends to the doors (4) so as to be pivotable about the vertical axis, moving parallel to the horizontal plane (5), and extending from both doors (4) by converging to each other towards the rear edge of the horizontal plane (5).

[0019] The link arm (7) connected to the door (4) being opened or closed transmits its movement to the other (second) link arm (7) and therefore to the other (second) door (4), thereby enabling both doors (4) to be opened or closed simultaneously.

[0020] The linkage mechanism (6) further comprises

- a linear motion guide rail (8) (hereinafter referred to as 'rail (8)' in short) fixed on the horizontal plane (5) in parallel to the horizontal plane (5) by means of a front support plate (20) and a rear support plate (21), and
- a carriage block (9) to which the rear ends of the link arms (7) are connected so as to be pivotable about the vertical axis, performing linear sliding motion on the rail (4) by means of a linear slide bearing between the rearmost position on the horizontal plane (5) in which the doors (4) are in the fully closed state and the foremost position in which the doors (4) are in the fully opened state.

[0021] The oven (1) of the invention comprises:

- a locking tab (10) connected to the carriage block (9), moving in the horizontal direction together with the carriage block (9) during opening and closing of the doors (4), and
- a locking mechanism (11) activated by the locking tab (10), enabling the doors (4) to be kept fixed in the closed position, while to be released when a user pulls the doors (4) with a force stronger than a given force.

[0022] In the rearmost locking position the carriage block (9) reaches on the rail (8) when the doors (4) are brought to the closed position, the locking mechanism (11) activated by the locking tab (10) fixes the locking tab (10) by holding it with a given force. The carriage block (9) connected to the locking tab (10) and the link arms (7) connected to the carriage block (9)

enable the doors (4) to be kept fixed in the closed position.

[0023] Locking assemblies used separately for each door (4) are no longer required in the oven (1) of the invention. Both doors (4) are enabled to be kept fixed together in the closed position by means of a single locking mechanism (11) integrated to the linkage mechanism (6), such that they cannot be opened unless a user applies a given force. The force keeping the doors (4) in the closed and fixed state (or opening the doors (4)) is enabled to be easily adjusted by shifting the connection point of the locking tab (10) to the carriage block (9) or by changing the position of the locking tab (10) by means of screws or similar adjustment devices (not shown in the figures).

[0024] The locking mechanism (11) comprises

- a cam member (13) connected on a mounting plate (12) on the horizontal plane (5) so as to be pivotable about the vertical axis,
- a recess (14) provided on the cam member (13), enabling the locking tab (10) reaching the locking position when the doors (4) are closed, to abut and to rotate the cam member (13), and
- a retainer (15) enabling in the locking position, the locking tab (10) to be fixed (retained) by engaging a hole (22) on the locking tab (10) and the doors (4) to be kept closed such that they cannot to be opened under a given force by means of the carriage block (9) connected to the locking tab (10) and the link arms (7).

[0025] In an embodiment of the invention, the locking mechanism (11) comprises a cam follower (16) whose one end contacts the cam surfaces of the cam member (13), moving back and forth in the horizontal direction on the mounting plate (12) by the rotational motion of the cam member (13) during closing (locking) of the doors (4) and opening (releasing) of the doors (4), and a spring (17) connected to the cam follower (16), enabling continuous contact of the cam follower (16) to the cam member (13).

[0026] In another embodiment of the invention, the locking mechanism (11) comprises a switch (18) for example of a normally closed (nc.) or normally open (no.) type, fixed to the mounting plate (12), assuming on or off position by triggering of the cam follower (16) moving back and forth

during closing and opening of the doors (4), detecting whether the doors (4) are fully closed sealingly or not.

[0027] In another embodiment of the invention, upon the switch (18) transmitting a signal indicating that the doors (4) are not fully closed, a control unit (not shown in the figures) does not allow the cooking process to be started in the oven (1) and alerts the user by audible/visible means.

[0028] In an oven (1) with water washing or pyrolytic (high heat) cleaning features, upon the switch (18) transmitting a signal indicating that the doors (4) are not fully closed, the control unit does not start the water washing process or pyrolytic cleaning process in the oven (1) and alerts the user by audible/visible means.

Claims

1. An oven (1) **comprising** two French style side-by-side doors (4) enabling access into the cooking chamber (3) in a body (2), connected to the front surfaces of the opposite right and left vertical edges of the body (2) by means of hinges (19) so as to be pivotable about the vertical axis, and a linkage mechanism (6) mounted on a horizontal plane (5) on the upper or the lower wall of the body (2), enabling both doors (4) to be simultaneously opened by only one of the doors (4) being moved, the mechanism comprising
   - two link arms (7) symmetrically connected by their front ends to the to the doors (4), moving parallel to the horizontal plane (5), and extending from both doors (4) by converging to each other towards the rear edge of the horizontal plane (5),
   - a rail (8) fixed on the horizontal plane (5) in parallel to the horizontal plane (5) by means of a front support plate (20) and a rear support plate (21), and
   - a carriage block (9) to which the rear ends of the link arms (7) are connected, performing linear sliding motion on the rail (8), **characterized by**
   - a locking tab (10) connected to the carriage block (9), moving in the horizontal direction together with the carriage block (9) during opening and closing of the doors (4), **and by**
   - a locking mechanism (11) activated by the locking tab (10), enabling the doors (4) to be kept fixed in the closed position, while to be released when the doors (4) are pulled with a force stronger than a given force.
2. An oven (1) according to claim 1, **characterized by** the locking mechanism (11) comprising on the horizontal plane (5) a cam member (13) connected on a mounting plate (12) so as to be pivotable about the vertical axis, a recess (14) provided on the cam member (13), enabling the locking tab (10) to abut and to rotate the cam member (13), a retainer (15) enabling the locking tab (10) to be fixed by engaging a hole (22) on the locking tab (10) in the locking position.
3. An oven (1) according to claim 2, **characterized by** the locking mechanism (11) comprising a cam follower (16) whose one end contacts the cam surfaces of the cam member (13), moving back and forth in the horizontal direction on the mounting plate (12) by the rotational motion of the cam member (13), and a spring (17) connected to the cam follower (16), enabling continuous contact of

the cam follower (16) to the cam member (13).

4. An oven (1) according to claim 3, **characterized by** the locking mechanism (11) comprising a switch (18) fixed to the mounting plate (12), assuming on or off position by triggering of the cam follower (16) moving back and forth during closing and opening of the doors (4), detecting whether the doors (4) are fully closed sealingly or not.
5. An oven (1) according to claim 4, **characterized by** a control unit not allowing the cooking process to be started and alerting the user by audible/visible means upon the switch (18) transmitting a signal indicating that the doors (4) are not fully closed.
6. An oven (1) according to claim 4, **characterized by** a control unit not allowing the water washing process or the pyrolytic cleaning process to be started and alerting the user by audible/visible means upon the switch (18) transmitting a signal indicating that the doors (4) are not fully closed.

Figure 1

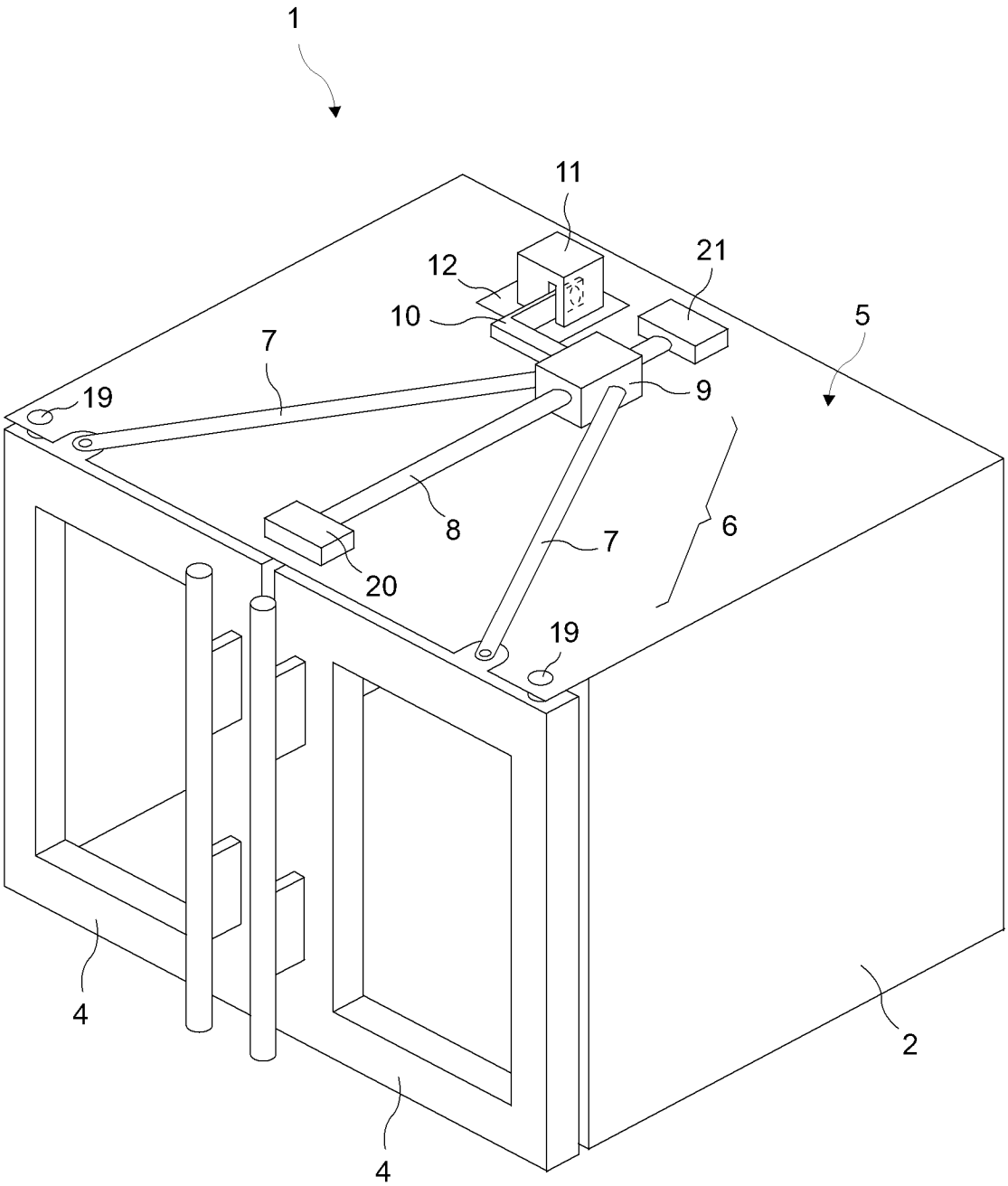

Figure 2

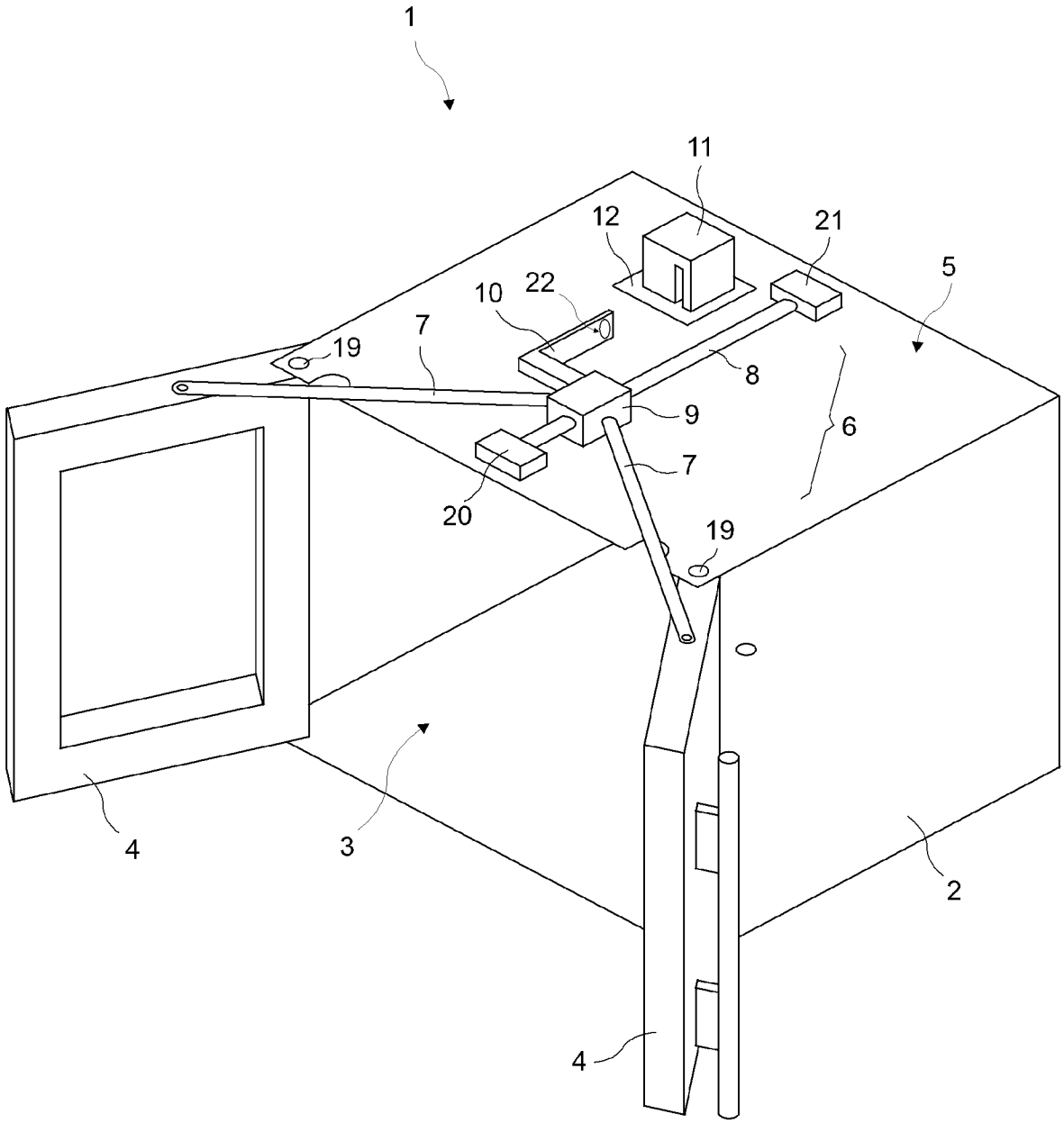

Figure 3

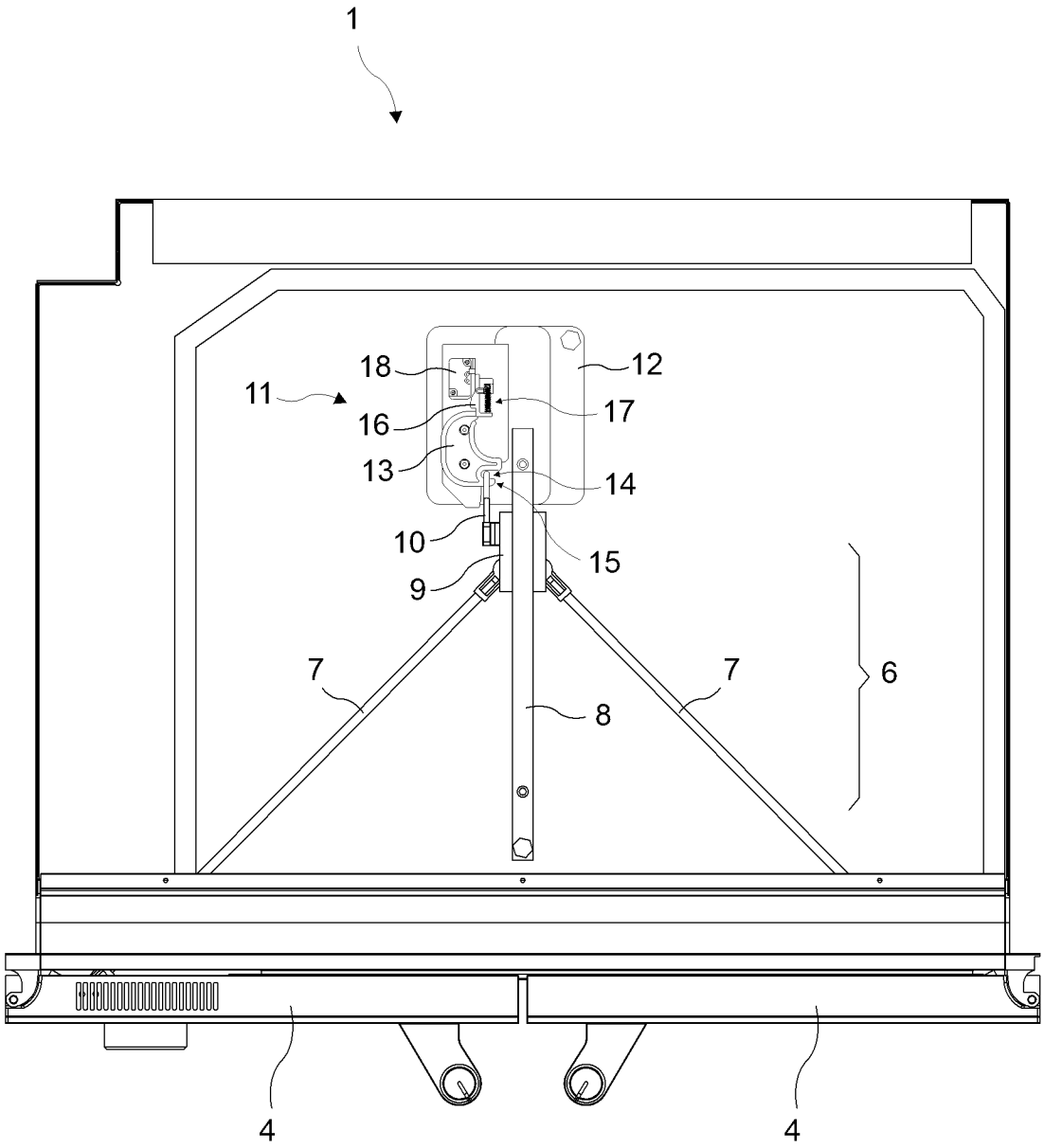

Figure 4

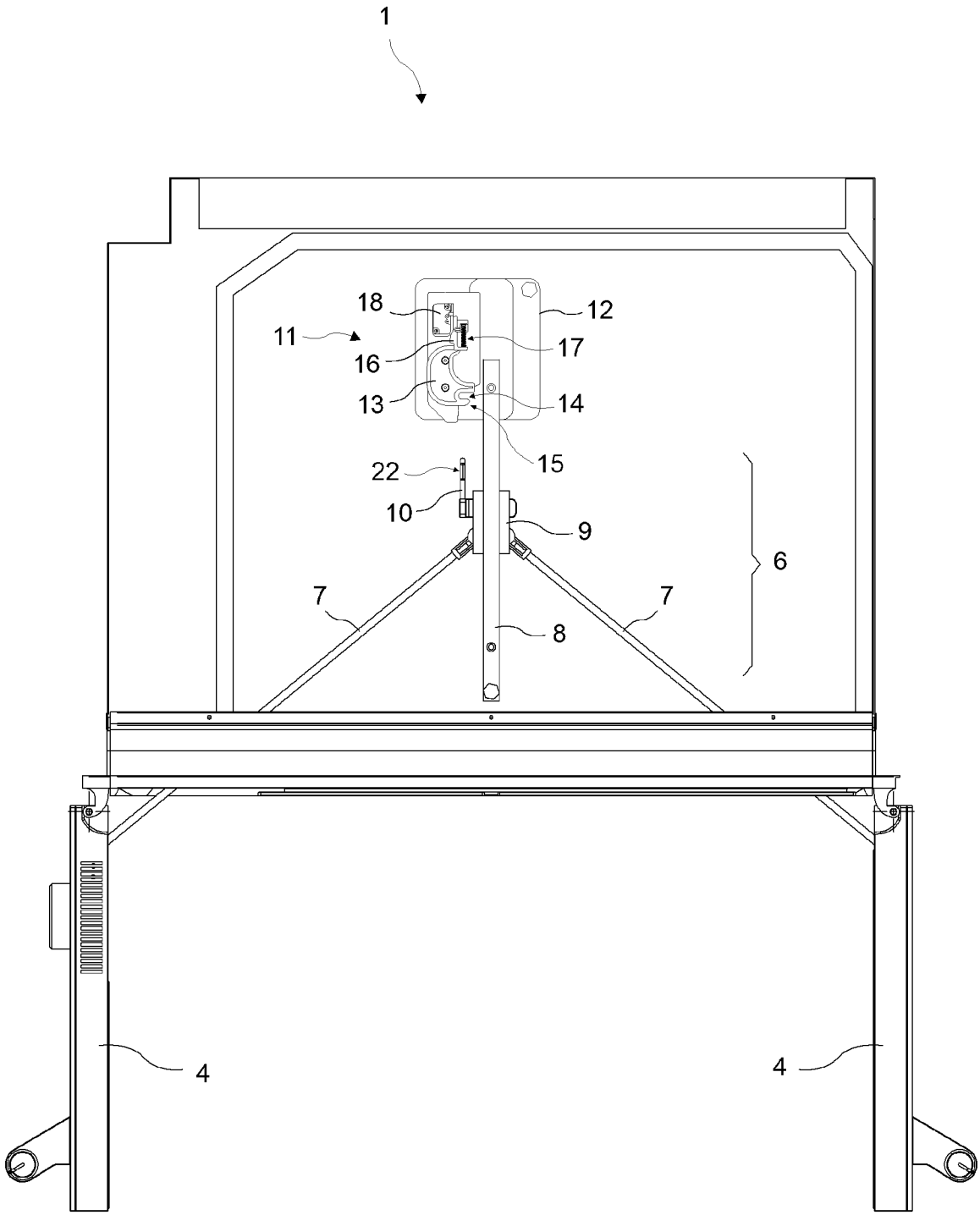

Figure 5

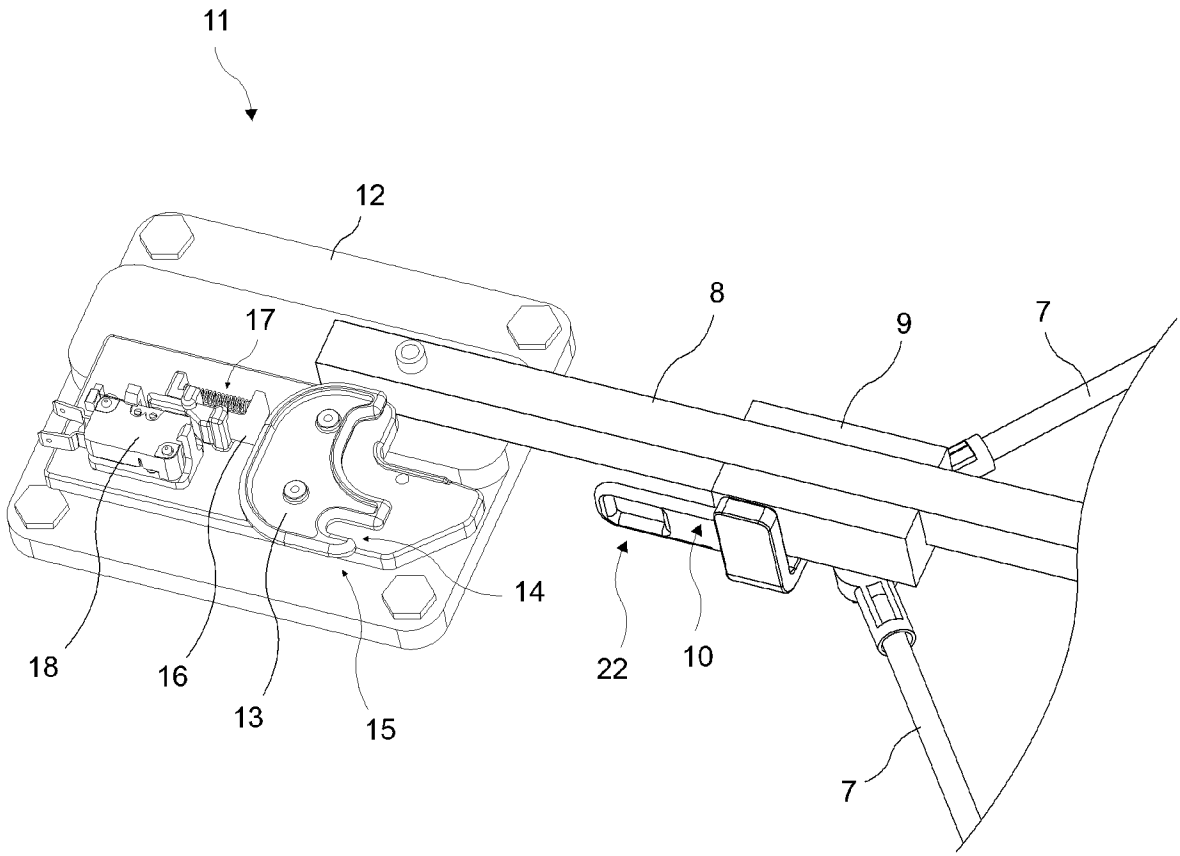

Figure 6

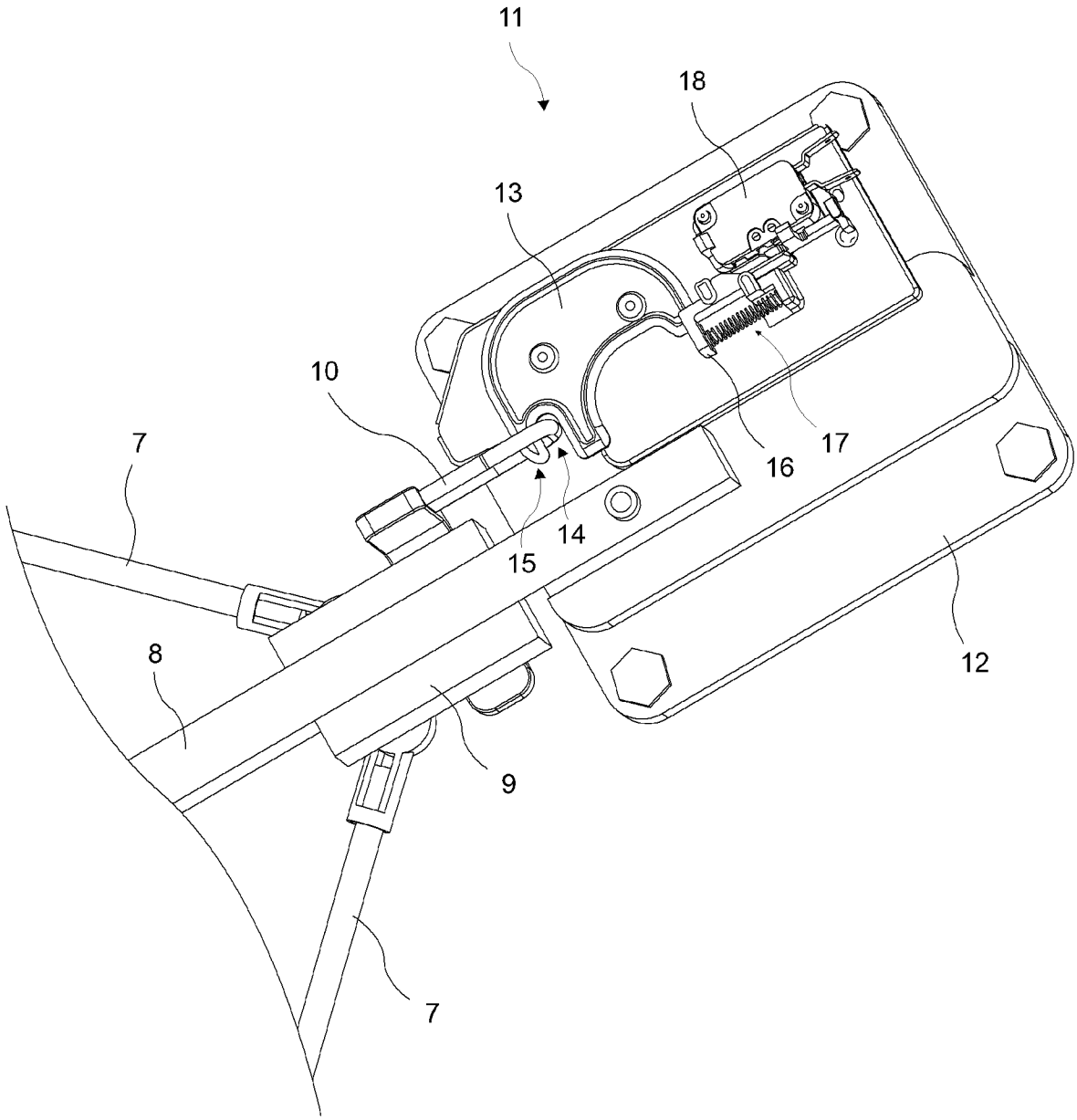

INTERNATIONAL SEARCH REPORT

International application No
PCT/EP2019/054550

A. CLASSIFICATION OF SUBJECT MATTER
INV. F24C15/02
ADD.

According to International Patent Classification (IPC) or to both national classification and IPC

B. FIELDS SEARCHED

Minimum documentation searched (classification system followed by classification symbols)
F24C E05F E05C F25D

Documentation searched other than minimum documentation to the extent that such documents are included in the fields searched

Electronic data base consulted during the international search (name of data base and, where practicable, search terms used)

EPO-Internal, WPI Data

C. DOCUMENTS CONSIDERED TO BE RELEVANT

Category*	Citation of document, with indication, where appropriate, of the relevant passages	Relevant to claim No.
X	US 2 707 225 A (PEARCE GEORGE C) 26 April 1955 (1955-04-26)	1
A	figures 1-4,7,8 column 1, lines 73-78 column 2, lines 48-55 column 3, lines 13-66	2-6

A	CN 105 889 995 A (GUANGDONG MIDEA KITCHEN APPLIANCES MFG CO LTD; MIDEA GROUP CO LTD) 24 August 2016 (2016-08-24) figures 1-12	2-4

A	FR 2 359 378 A1 (LITTON INDUSTRIES INC [US]) 17 February 1978 (1978-02-17) page 2, lines 7-11	5,6

	-/--	

[X] Further documents are listed in the continuation of Box C.

[X] See patent family annex.

* Special categories of cited documents :

"A" document defining the general state of the art which is not considered to be of particular relevance

"E" earlier application or patent but published on or after the international filing date

"L" document which may throw doubts on priority claim(s) or which is cited to establish the publication date of another citation or other special reason (as specified)

"O" document referring to an oral disclosure, use, exhibition or other means

"P" document published prior to the international filing date but later than the priority date claimed

"T" later document published after the international filing date or priority date and not in conflict with the application but cited to understand the principle or theory underlying the invention

"X" document of particular relevance; the claimed invention cannot be considered novel or cannot be considered to involve an inventive step when the document is taken alone

"Y" document of particular relevance; the claimed invention cannot be considered to involve an inventive step when the document is combined with one or more other such documents, such combination being obvious to a person skilled in the art

"&" document member of the same patent family

Date of the actual completion of the international search	Date of mailing of the international search report
6 May 2019	16/05/2019

Name and mailing address of the ISA/	Authorized officer
European Patent Office, P.B. 5818 Patentlaan 2 NL - 2280 HV Rijswijk Tel. (+31-70) 340-2040, Fax: (+31-70) 340-3016	Fest, Gilles

2

Form PCT/ISA/210 (second sheet) (April 2005)

C(Continuation). DOCUMENTS CONSIDERED TO BE RELEVANT

Category*	Citation of document, with indication, where appropriate, of the relevant passages	Relevant to claim No.
A	US 3 216 776 A (JAMES CARBARY RICHARD) 9 November 1965 (1965-11-09) figures 1,4-7 column 2, lines 36-55 column 4, lines 24-73	1-6
A	US 1 827 634 A (WINEGAR EDMUND M ET AL) 13 October 1931 (1931-10-13) figures 1-4 page 1, lines 35-72	2,3
A	US 2010/206289 A1 (LARSEN CHRISTOPHER A [US] ET AL) 19 August 2010 (2010-08-19) cited in the application figures 1-6	1-6

INTERNATIONAL SEARCH REPORT

Information on patent family members

International application No
PCT/EP2019/054550

Patent document cited in search report	Publication date	Patent family member(s)	Publication date
US 2707225 A	26-04-1955	NONE	
CN 105889995 A	24-08-2016	CN 105889995 A	24-08-2016
		KR 20180019155 A	23-02-2018
FR 2359378 A1	17-02-1978	AU 500136 B2	10-05-1979
		CA 1066577 A	20-11-1979
		DE 2715767 A1	26-01-1978
		DE 7711172 U1	13-10-1977
		FR 2359378 A1	17-02-1978
		GB 1584051 A	04-02-1981
		US 4082077 A	04-04-1978
US 3216776 A	09-11-1965	NONE	
US 1827634 A	13-10-1931	NONE	
US 2010206289 A1	19-08-2010	CA 2551979 A1	18-02-2007
		US 2007039606 A1	22-02-2007
		US 2010206289 A1	19-08-2010