Dec. 1, 1936. V. H. JENNINGS 2,062,717

PICKING MECHANISM FOR LOOMS

Filed Jan. 15, 1936

FIG. 1

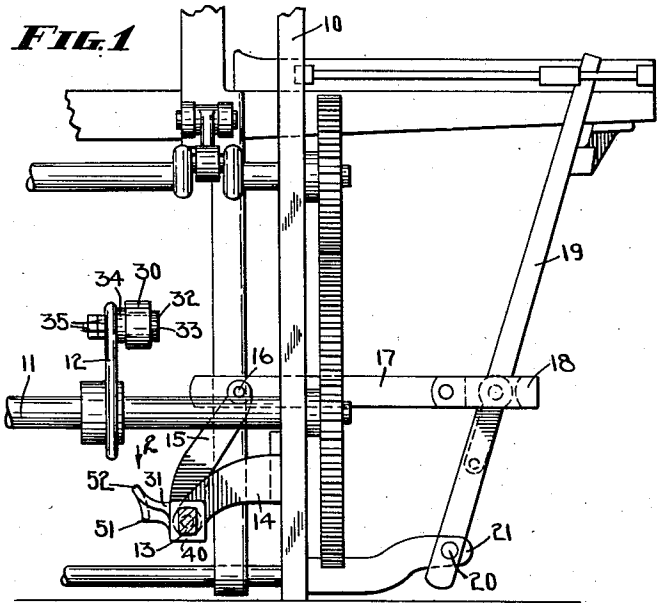

FIG. 2

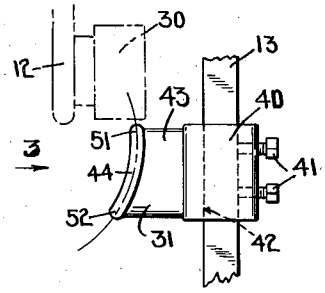

FIG. 3

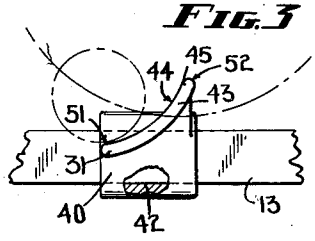

FIG. 4

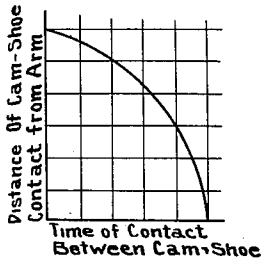

FIG. 5

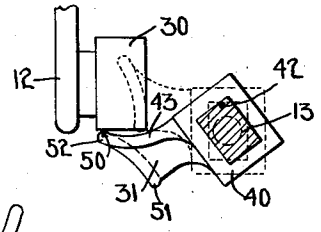

FIG. 6

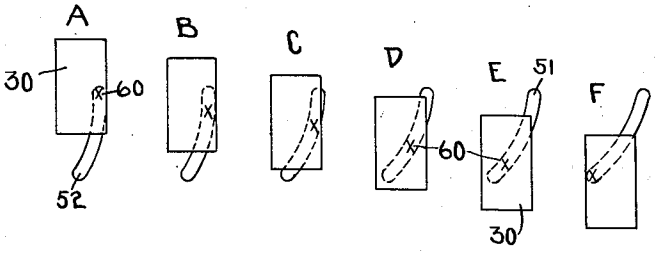

Inventor
Victor H. Jennings
Chas. T. Hawley
Attorney

Patented Dec. 1, 1936 2,062,717

UNITED STATES PATENT OFFICE

2,062,717

PICKING MECHANISM FOR LOOMS

Victor H. Jennings, Worcester, Mass., assignor to Crompton & Knowles Loom Works, Worcester, Mass., a corporation of Massachusetts

Application January 15, 1936, Serial No. 59,248

5 Claims. (Cl. 139—147)

This invention relates to improvements in picking motions for looms and it is the general object of the invention to provide a picking shoe and roll therefor so constucted as to increase their effective life, particularly that of the roll.

In the particular type of picking motion which I have chosen to illustrate my invention there is a rotating arm on the loom bottom shaft carrying a roll the axis of which is substantially parallel to the shaft, and there is a transverse picking shaft extending from the front to the back of the loom carrying a picking shoe positioned to engage the roll as the arm rotates and thereby rock the picker shaft. The customary connections, including a sweep arm, sweep stick, lug strap and picker stick convey the force from the picking shoe to the shuttle.

As heretofore constructed the rolling point of contact between the cam surface of the shoe and the roll has remained at approximately the same distance from the picker arm which supports the roll, with the result that all of the wear is concentrated on the center of the cylindrical surface of the roll. It is an important object of my present invention to construct a cam on the shoe so that the rolling point of contact will move longitudinally along the stud on which the roll rotates, thereby distributing the wear over a larger working area of the roll.

The roll is ordinarily mounted on a stud projecting from one side of the picker arm and the force tending to bend or break the stud depends upon the torque arm or distance of the point of application of the force from the picker arm which supports the stud. A given force applied to the outer end of the stud will act through a long torque arm and have more effect in deforming it than would be the case if the same force were applied near the roll arm where the torque arm is short. With previous constructions the torque arm has been relatively long, extending out to the center of the stud, and there has been no change in the length of the torque arm to compensate for the increasing pressures developed as picking proceeds. It is a further object of my invention to provide for increased life of the stud by moving the point of rolling contact between the roll and picker shoe from a point relatively remote from the picker arm toward the latter as the pressures of picking increase.

At the beginning of the pick the force applied to the shuttle, except for that necessary to overcome its inertia, is relatively light, but as the shuttle reaches the point of delivery from the shuttle box the force is relatively heavy, the desired acceleration being attained by choosing the correct inclination of the cam face on the shoe. It is another object of my invention to form the cam on the shoe so that the rolling point of contact between the roll and cam will move along the cylindrical surface of the roll at a relatively slow rate of speed at the beginning of the pick when the pressures are low and at a higher rate toward the picking roll arm as the pressures increase. In this way the time-pressure factor remains more or less constant throughout the length of the roll surface, thereby producing uniform wear. That area of the roll subjected to light pressure is relatively small, and the time of contact which it has with the roll over an operating period is greater than is the case with an equal area where the pressures are higher. The area where the pressure is highest has least contact in point of time with the roll. These conditions coupled with the rotation of the roll on its stud, insure uniform wearing.

With these and other objects in view which will appear as the description proceeds, my invention resides in the combination and arrangement of parts hereinafter described and set forth.

In the accompanying drawing, wherein a convenient embodiment of my invention is set forth,

Fig. 1 is a rear elevation of the left hand end of a loom having my invention applied thereto,

Fig. 2 is a top plan view on an enlarged scale taken in the direction of arrow 2, Fig. 1,

Fig. 3 is a view taken in the direction of arrow 3, Fig. 2,

Fig. 4 represents graphically certain relations existing throughout the pick to be described in detail hereinafter,

Fig. 5 is a diagrammatic view showing the relation of the roll and cam on the picker shoe, and

Fig. 6 is a composite view showing diagrammatically the relation of the shoe cam, roll and picker arm, together with the rolling point of contact between the roll and shoe during six successive positions assumed to occur between the beginning and ending of a complete picking stroke.

Referring to Fig. 1, the loom frame 10 has mounted for rotation therein a bottom shaft 11 to which is secured a picking arm 12. A picker shaft 13 is mounted in bearings 14 for oscillation about its axis in a left hand direction as viewed in Fig. 1 to effect picking, the force of picking being transmitted from a sweep arm 15 secured to the picker shaft and connected at its upper end as at 16 to a sweep stick 17 carrying the usual lug strap 18 which extends around the

picker stick 19. The latter is pivoted as at 20 to the rocking foot 21 mounted for oscillation in the loom frame. The matter thus far described is of common construction and of itself forms no part of my present invention.

The picking roll 30 is on a stud 32 substantially parallel to the bottom shaft 11. The stud confines the picking roll between the head 33 thereof and a washer 34 surrounding the stud. The latter has its left end as viewed in Fig. 1 threaded to receive holding nuts 35. A picking shoe of the batwing type is secured to the picker shaft. The parts except for the length of the wearing surface of the roll and form of the shoe may be of the usual form, such as shown in Patents Nos. 690,000 and 1,722,831. As the loom runs rotation of the bottom shaft 11 will carry the picking roll 30 along a circular path the plane of which is perpendicular to the axis of the bottom shaft, and preferably though not necessarily the shaft 13 will be parallel to this same plane.

The shoe 31 comprises a body 40 secured to the picker shaft 13 by set screws 41 and having a bore 42 to receive the rectangular shaft 13. A wing 43 projects laterally from one side of the body and has a roll contacting surface 44 the form of which is an important part of this invention. As shown in Fig. 3 the cam face 44 may incline upwardly as at 45 to give the desired rate of acceleration for the shuttle, this inclination being increased somewhat over usual forms but so designed that the accelerating rate at which the shuttle is delivered from the shuttle box will be no less than that found with known picking motions of the so-called batwing type.

The cam 44 is constructed so that as the shaft 13 rocks, the point of contact 50, Fig. 5, between the cam and the roll will move away from the axis of the picker shaft and toward the plane in which the picking arm 12 rotates. The general shape of the cam will be that indicated in Fig. 2, the dot and dash line representing the path of the roll-cam contact. This cam is so shaped that as the roll travels along the low end 51 thereof the contact will move away from shaft 13 rather slowly, this being the point in the pick when the pressure of contact is low. As picking continues, however, the point of contact travels at an increasing rate from shaft 13 and toward the picker arm 12, the greatest rate of motion toward said arm being at the end of the stroke when the roll engages the upper end 52 of the cam. It is at this time that the pressure is highest but the travel is such that the area over which the contact occurs is more or less in proportion to the pressure, the area of distribution being greater as the pressure increases.

It is to be understood that the roll 30 is free to rotate on the stud 32 and because of this different parts of the roll engage the cam face 44 during successive picking operation. It should also be borne in mind that although the point of contact is theoretically along the line, yet in actual practice it covers a broader path due to the comparative flatness of the cam 31, as suggested in Fig. 5.

The course of the roll as it rotates uniformly about its axis and moves over the cam is set forth diagrammatically in Fig. 6, where six successive positions are indicated at A, B, C, D, E, and F. The point of contact is designated by the cross 60 in each position and it will be seen that this contact moves over the face of the roll in a direction toward the arm 12, the positions A, B, C and to some extent D indicating a rather slow motion toward the picker arm during the low pressure first part of the pick, while positions E and F indicate a rapid motion during the high pressure latter part of the pick toward the picker arm.

Fig. 4 indicates graphically the direction and relative rates of travel of the succeeding positions for the points of roll-cam contact and the distance of the point of contact from the picker arm.

It will be understood from an inspection of the upper part of Fig. 1 that contact between the cam and roll taking place at the point 51 exerts a relatively large leverage action on the stud 32 tending to bend the latter, which bending, however, is resisted by the proper design as to size and material of the stud. The distance from the picker arm measured along the stud to a point over the roll-cam contact at any instant can be considered the torque arm through which the picking pressure acts tending to bend the stud. At the start of the pick the torque arm is long but the pressure is low, whereas at the end the torque arm is short and the pressure high. There is therefore a change in the two factors tending to bend the stud, but their product will remain the same within reasonably close limits, hence the stud, if designed initially with a sufficient factor of safety, will not be subject to any great tendency to bend as the pick progresses. This condition grows out of the fact that the point of roll-cam contact moves toward the picker arm.

From the foregoing it will be seen that I have provided a picker roll and cam so related that the wear incident to the picking operation is distributed over a large part of the cylindrical surface of the roll. It will further be seen that the point at which force is transmitted from the roll to the cam moves progressively from a point remote from the picker arm toward the latter so that increasing pressures which are encountered as the picking operation proceeds are accompanied by a lessening of the torque arm, resulting in substantially uniform stressing of the stud. Since the force applied to the shuttle accelerates, causing successive pressures which increase in geometric relation, the rate of travel of the point of contact along the roll also accelerates, the distribution of wear keeping step with the increasing pressures which cause the wear. The incline 45 which gives the necessary acceleration for the shuttle motion, coupled with the increasing rate of roll-cam contact toward the picker arm, provides the relation out of which grows the last named advantage.

Having thus described my invention it will be seen that changes and modifications may be made therein by those skilled in the art without departing from the spirit and scope of the invention and I do not wish to be limited to the details herein disclosed, but what I claim is:

1. In a loom picking motion operative to give an accelerating motion to a shuttle, a rotating picking arm, a stud carried thereby, a roll rotatable on the stud, a picker shaft to be rocked extending transversely of the axis of the rotating arm, and a shoe on the picker shaft having a surface to engage the roll, the surface extending from the point of initial contact with the roll toward the picking arm to cause the point of contact between the roll and surface to travel along the surface of the roll toward the arm as picking progresses.

2. In a picking motion for looms, a picking

roll, a picker arm rotating uniformly and carrying the roll, a picker shaft to be rocked, and a shoe on the picker shaft having a pressure receiving cam surface to engage the roll and be moved around the picker shaft axis as the arm rotates, said cam surface extending in a direction transverse of the plane of rotation of the picker arm to cause the point of contact between the surface and roll to travel away from the picker shaft axis at a rate which progressively increases, and said cam surface extending toward the picker arm and shaped to effect an accelerated rocking of the picker shaft as the picker arm moves thereover.

3. In a picking motion for looms, a picking roll, a picker arm rotating uniformly and carrying the roll, a picker shaft to be rocked, and a shoe on the picker shaft having a pressure receiving surface to engage the roll and be moved around the picker shaft axis as the arm rotates, said surface extending in a direction transverse of the plane of rotation of the picker arm to cause the point of contact between the surface and roll to travel away from the picker shaft axis slowly at the beginning of the picking operation and rapidly toward the end of the operation, and said cam surface extending toward the picker arm and shaped to effect an accelerated rocking of the picker shaft as the picker arm moves thereover.

4. In a loom picking motion operative to give an accelerating motion to a shuttle, a rotating picking arm, a stud carried thereby, a roll rotatable on the stud, a picker shaft to be rocked extending transversely of the axis of the rotating arm, and a shoe on the picker shaft having a surface to engage the roll, the surface extending from the point of initial contact with the roll toward the arm to cause the point of contact between the roll and surface to travel along the surface of the roll toward said arm at a rate which starts relatively low and ends relatively high, to the end that the distribution of wear on the roll is greatest and the moment tending to bend the stud is least when the point of contact is nearest the picking arm.

5. In a loom picking motion, a picker arm rotating at a substantially uniform rate, a picker roll extending laterally therefrom and supported thereby, a picker shaft transverse of the axis of rotation of the picker arm and on the same side of the latter as is the picker roll, a picker shoe secured to the picker shaft, and a picker roll engaging cam on the shoe located between the picker shaft and plane of rotation of the picker arm, said cam extending from the starting point thereof upwardly toward the axis of the picker arm and so formed as to cause an accelerated rocking of the picker shaft as the roll moves over said cam, and said cam inclined toward the plane of rotation of the picker arm and so formed that the point of contact between the roll and cam moves toward the plane of rotation of the picker arm with an accelerated rate as picking progresses.

VICTOR H. JENNINGS.