(12) INTERNATIONAL APPLICATION PUBLISHED UNDER THE PATENT COOPERATION TREATY (PCT)

(19) World Intellectual Property Organization
International Bureau

(43) International Publication Date
22 August 2013 (22.08.2013)

WIPO | PCT

(10) International Publication Number
WO 2013/122734 A1

(51) International Patent Classification:
H01L 23/427 (2006.01) *H01L 23/433* (2006.01)

(21) International Application Number:
PCT/US2013/023402

(22) International Filing Date:
28 January 2013 (28.01.2013)

(25) Filing Language: English

(26) Publication Language: English

(30) Priority Data:
61/599,191 15 February 2012 (15.02.2012) US
13/750,078 25 January 2013 (25.01.2013) US

(71) Applicant: **GENERAL ELECTRIC COMPANY** [US/US]; 1 River Road, Schenectady, NY 12345 (US).

(72) Inventors: **KIRK, Graham Charles**; Tove Valley Business Park, Old Tiffield Road, Northants NN126PF (GB). **CONNOLLY, Stuart**; Tove Valley Business Park, Northamptonshire NN12 6PF (GB). **DENG, Tao**; One Research Circle, K1-4D43, Niskayuan, NY 12309 (US). **HUSSAIN, Zeshan Jabar**; Tove Valley Business Park, Northamptonshire NN12 6PF (GB). **SHAH, Bincy Milan**; Tove Valley Business Park, Northamptonshire NN12 6PF (GB).

(74) Agents: **CONKLIN, Mark A.** et al.; General Electric Company, Global Patent Operation, 2 Corporate Drive, Suite 648, Shelton, CT 06484 (US).

(81) Designated States *(unless otherwise indicated, for every kind of national protection available)*: AE, AG, AL, AM, AO, AT, AU, AZ, BA, BB, BG, BH, BN, BR, BW, BY, BZ, CA, CH, CL, CN, CO, CR, CU, CZ, DE, DK, DM, DO, DZ, EC, EE, EG, ES, FI, GB, GD, GE, GH, GM, GT, HN, HR, HU, ID, IL, IN, IS, JP, KE, KG, KM, KN, KP, KR, KZ, LA, LC, LK, LR, LS, LT, LU, LY, MA, MD, ME, MG, MK, MN, MW, MX, MY, MZ, NA, NG, NI, NO, NZ, OM, PA, PE, PG, PH, PL, PT, QA, RO, RS, RU, RW, SC, SD, SE, SG, SK, SL, SM, ST, SV, SY, TH, TJ, TM, TN, TR, TT, TZ, UA, UG, US, UZ, VC, VN, ZA, ZM, ZW.

(84) Designated States *(unless otherwise indicated, for every kind of regional protection available)*: ARIPO (BW, GH, GM, KE, LR, LS, MW, MZ, NA, RW, SD, SL, SZ, TZ, UG, ZM, ZW), Eurasian (AM, AZ, BY, KG, KZ, RU, TJ, TM), European (AL, AT, BE, BG, CH, CY, CZ, DE, DK, EE, ES, FI, FR, GB, GR, HR, HU, IE, IS, IT, LT, LU, LV, MC, MK, MT, NL, NO, PL, PT, RO, RS, SE, SI, SK, SM, TR), OAPI (BF, BJ, CF, CG, CI, CM, GA, GN, GQ, GW, ML, MR, NE, SN, TD, TG).

Declarations under Rule 4.17:

— *as to applicant's entitlement to apply for and be granted a patent (Rule 4.17(ii))*

— *as to the applicant's entitlement to claim the priority of the earlier application (Rule 4.17(iii))*

Published:

— *with international search report (Art. 21(3))*

(54) Title: FLEXIBLE METALLIC HEAT CONNECTOR

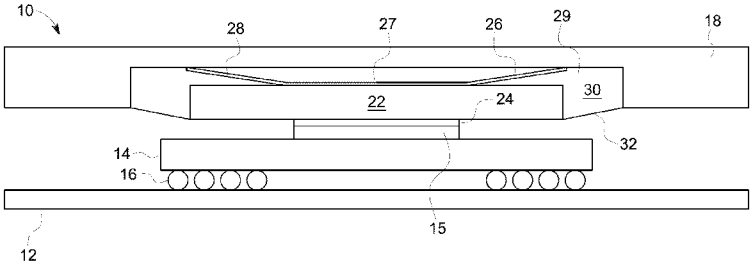

FIG. 1

(57) Abstract: A thermal connector configured to be placed within a recess of a heat sink between the heat sink and a heat generating component and transfer heat from the component to the heat sink, including a heat spreader configured to fit within the recess of the heat sink, a spring configured to sit between the heat spreader and with the heat sink and bias the heat spreader towards and away from the heat sink, a flexible membrane attached to the heat sink and the heat spreader and seal off the recess, and a phase change material that fills the recess, wherein the flexible membrane contains the phase change material and allows it to contract or expand in response to the movement of the heat spreader towards or away from the heat sink.

WO 2013/122734 A1

FLEXIBLE METALLIC HEAT CONNECTOR

I. Cross Reference to Related Application

[0001] This application is related to US provisional application 61/599,191 filed on February 15, 2012, which is hereby incorporated by reference

II. Field of the Invention

[0002] The subject matter disclosed herein relates generally to a system and method for heat dissipation. More particularly, the subject matter disclosed herein relates to thermal connectors between heat generating devices and heat sinks.

III. Background of the Invention

[0003] Electronic devices and other devices often produce heat during operation that needs to be dissipated away from the device. Heat sinks are often used for this purpose; a heat sink is a passive component that cools a device by dissipating heat into the surrounding environment. In order for the heat sink to operate properly, the heat from the device must be transferred to the heat sink over a thermal connection. While the term heat sink is used herein it should be understood that the term refers to all types of heat dissipating devices, including heat pipe modules and thermal ground planes.

[0004] A common arrangement for electronic devices is a plurality of electronic components attached to a printed circuit board (PCB). Heat from these multiple components is transferred to one or more heat sinks using thermal connections. Each component on the PCB is a particular distance from the heat sink (tolerance) and the heat must be effectively transferred across the tolerance from the component to the heat sink. Accordingly, the tolerance is often filled with a thermal connector, such as a heat spreader and/or thermal interface material.

[0005] When a single heat sink serves multiple components, the thermal connectors often must accommodate several different tolerances. Some of the proposed solutions for this issue include the use of thermal pastes, thermal greases, and thermally conductive pads that are compressible and expandable. These thermal connectors typically have fairly low thermal

conductivities, in the range of 3 watts per meter kelvin (W/mK). Some thermal pads have conductivity as high as 17 W/mK but they can only be compressed to 10% – 20% between the heat sink and the component or the component will be damaged. This limits the size of the starting gap between the component and the heat sink and makes it more difficult to assemble the device.

[0006] Accordingly, there is a need for better thermal connectors to transfer heat between heat generating components and heat sinks. More particularly, there is a need for thermal connectors that accommodate a variety of tolerances between multiple components of a heat generating device and a heat sink.

IV. Summary of the Embodiments

[0007] In at least one aspect, the present disclosure provides a thermal connector configured to be placed within a recess of a heat sink between the heat sink and a heat generating component and transfer heat from the component to the heat sink. The thermal connector includes a heat spreader configured to fit within the recess of the heat sink, a spring configured to sit between the heat spreader and with the heat sink and bias the heat spreader towards and away from the heat sink, a flexible membrane attached to the heat sink and the heat spreader and seal off the recess, and a phase change material that fills the recess, wherein the flexible membrane contains the phase change material and allows it to contract or expand in response to the movement of the heat spreader towards or away from the heat sink.

[0008] In at least another aspect, the present disclosure provides a cartridge for placing between a heat generating component and a heat sink for facilitating transfer of heat from the component to the heat sink. The cartridge includes a heat spreader and a spring attached to the heat spreader. The heat spreader and spring are circumferentially enclosed by a frame and a flexible membrane is attached to the frame and the heat spreader to define an open topped void filled by a phase change material. The spring, flexible membrane, and phase change material expand or contract to accommodate the tolerance between the heat sink and component.

[0009] In yet another aspect, the present disclosure provides a method for transferring heat from a heat generating component to a heat sink. The method includes the steps of providing the

thermal connector or cartridge as described above and positioning the thermal connector or cartridge between a heat sink and a heat generating component. The thermal connector or cartridge can accommodate several different components.

[0010] Further features and advantages of the invention, as well as the structure and operation of various embodiments of the invention, are described in detail below with reference to the accompanying drawings. It is noted that the invention is not limited to the specific embodiments described herein. Such embodiments are presented herein for illustrative purposes only. Additional embodiments will be apparent to persons skilled in the relevant art(s) based on the teachings contained herein.

V. Brief Description of the Drawings

[0011] FIG. 1 illustrates a cross-sectional schematic view of a thermal connector in accordance with at least one embodiment of the present disclosure.

[0012] FIG. 2 illustrates a top plan view of the spring in accordance with at least one embodiment of the present disclosure.

[0013] FIG. 3 illustrates a cross-sectional schematic view of a thermal connector cartridge in accordance with at least one embodiment of the present disclosure in exploded view with a heat sink and heat generating component.

[0014] FIG. 4 is a perspective view of the thermal connector cartridge of FIG. 3.

VI. Detailed Description of Embodiments of the Invention

[0015] The following detailed description is merely exemplary in nature and is not intended to limit the applications and uses disclosed herein. Further, there is no intention to be bound by any theory presented in the preceding background or summary or the following detailed description. While embodiments of the present technology are described herein primarily in connection with dissipation of heat from an electrical circuit board to a heat sink, the concepts are also applicable to other types of systems where it is desirable to transfer thermal energy from a heat generating component to a heat dissipation device.

[0016] In at least one aspect, the present disclosure provides a device and method for the transfer of thermal energy from components on an electrical circuit board to a heat sink.

[0017] Thermal conductor 10 as applied in an electrical device is shown in FIG. 1. A portion of an electrical device includes a printed circuit board (PCB) 12 having an electrical device component 14 attached thereto via a ball grid array (BGA) 16. Silicon die 15 is a part of component 14 and a thermal interface material (TIM) 24 is connected to silicon die 15 to provide for thermal conductivity between silicon die 15 and the thermal conductor 10.

[0018] Heat sink 18 is displaced away from the PCB 12 and component 14 and there is a tolerance or gap (not numbered) there between that is filled here with the thermal conductor 10.

[0019] The thermal conductor 10 includes heat spreader 22 and spring 26. Desirably spring 26 includes body portion 27 and legs 28 extending away from the body portion 27 (shown more clearly in FIG. 2). Desirably, spring 26 is attached to heat spreader 22 at its body portion 27, leaving leg portions 28 free (as further illustrated by FIG. 2 and described below).

[0020] Heat sink 18 has a recess (not numbered) into which the assembly of the spring 26 and heat spreader 22 fits. A flexible membrane 32 is fixed to the edges of heat spreader 22 and heat sink 18 and seals off the void 29 between the heat sink 18 and heat spreader 22. The flexible membrane 32 can extend across the heat spreader 22 or simply to the edges thereof in order to adequately retain the phase change material.

[0021] Void 29 is filled by phase change material 30. Phase change material 30 is a material, most preferably a low melting point alloy, which melts at a particular temperature.

[0022] To assemble the thermal connector, the heat spreader 22 and spring 26 assembly is placed in the heat sink recess. The spring 26 is compressed to its smallest height while the phase change material 30 is in a melted state, and then the phase change material 30 is hardened by lowering the temperature.

[0023] The thermal connector is deployed by raising the temperature to the melting point of the phase change material 30. The melting of the phase change material 30 allows the spring 26

to expand and the spring 26 will push heat spreader 22 into thermal contact with component 14 (via TIM 24).

[0024] The tolerance between a heat sink and heat generating component in an electrical device ranges from about 0.1 mm to about 3 mm, more specifically about 0.3 to 1 mm, and is typically about 0.8 mm. Accordingly, the thermal conductor should be able to expand to fit this range.

[0025] FIG. 2 illustrates one embodiment of the spring 34, having a main body 36 and legs 38. Here, spring 34 is shown having three legs 38 but it could have more or less legs. Spring main body 36 is fixed to a heat spreader 39 such as by spot welding or soldering. The spring 34 is preferably made out of an alloy such as beryllium copper (BeCu). It can be from about 0.10 mm to 0.40 mm in thickness, or more preferably from about 0.20 mm to 0.30 mm in thickness. The spring thickness and dimensions are chosen to achieve the correct loading for the device when compressed. In other words, and referring to FIG. 1, the spring 26 should exert sufficient pressure on the heat spreader 22 to hold it against TIM 24 and achieve good thermal contact. However, spring 26 should not cause heat spreader 22 to exert an amount of pressure that damages TIM 24 or the component 14. In one embodiment, the spring 34 is nickel plated, to increase its wettability with the phase change material, as described below.

[0026] Phase change material 30 is desirably a material that is solid at near room temperature and melts at a temperature to deploy the spring. As one example, for many electronic devices, a phase change material having a melting point between about 40 °C to 250 °C is appropriate, more preferably from about 60 °C to 160 °C. One preferred metal alloy is 52In 48Sn which has a melting point of 118 °C and a thermal conductivity of 35 W/mK. This alloy is available from Indium Corporation under the trademark Indalloy® 1E. Eutectic alloys are preferred but are not required. Mixtures or pastes could also be used.

[0027] Other metals and metal alloys that might be useful for certain applications include In, InBi, variations of InSn, BiSn, PbSn, SnAg, InPbAg, InAg, InSnBi, InGa, SnBiZn, SnInAg, SnAgCu, SnAgBi, and InPb.

[0028] In general, phase change materials having a thermal conductivity between about 20 W/mK and 400 W/mK are preferred, most desirably about 30 W/mK to 100 W/mK.

[0029] The flexible membrane 32 functions to retain the phase change material 30 within the void defined by the heat spreader 22 and the heat sink 18. Flexible membrane 32 is preferably a plastic film that can withstand the highest temperature reached by the operating device. For many electronic devices, a flexible membrane stable up to at least between about 150 to 200 °C is desirable, preferably up to at least 160 °C. Options for the flexible membrane include polymers, silicon, urethane, rubbers, and metal foil. One specific example is Dureflex® U073 125 μm which is a polyether-based thermoplastic polyurethane film. Flexible membrane 32 can be attached to heat sink 18 and heat spreader 22 with an appropriate adhesive.

[0030] Heat sink 18 can be a typical heat sink as used in the art, such as an aluminum alloy plate. As discussed above, other heat dissipating devices such as heat pipe modules and thermal ground planes can be used with the thermal conductors as described herein. As an example, the recess in the heat sink 18 can be about 2.25 mm.

[0031] Heat spreader 22 can be a typical heat spreader as used in the art, such as a copper plate. Other materials can be used as well, such as aluminum nitride (AlN) plates. Copper offers a higher thermal conductivity but aluminum nitride offers electrical isolation of the heat generating component from the heat sink. The heat spreader can be of a variety of sizes, such as those presently used in the art.

[0032] Thermal interface material 24 can also be a material typically used in the art, such as a paste or thermal grease.

[0033] The metal parts that are in contact with the phase change material (heat sink, heat spreader, spring) may be treated to increase their wettability by the phase change material 30. One treatment is a nickel plating with gold flash which increases the wettability of the parts with the metal alloy 52In 48Sn. This treatment is known in the art.

[0034] FIG. 3 illustrates another embodiment of a thermal conductor in accordance with the disclosure. In this embodiment, the thermal conductor is assembled as a cartridge 40 including

the heat spreader 44 and spring 46. As in the prior embodiment, spring 46 is desirably connected to heat spreader 44 at its body portion 48, leaving legs 50 free.

[0035] A frame 42 circumferentially surrounds the heat spreader 44/ spring 46 assembly and a flexible membrane 52 extends from the frame to the heat spreader. Phase change material 56 fills the void created by frame 42, flexible membrane 52, and heat spreader 44. The cartridge 40 is open on the top, so that the phase change material 56 is exposed.

[0036] In one embodiment of assembling the heat connector cartridge 40, the spring 46 is attached to heat spreader 44 and flexible membrane 52 is attached to the frame 42 and heat spreader 44. The phase change material 56 is melted and placed in the void created by frame 42, flexible membrane 52, and heat spreader 44. The spring 46 is flattened to its lowest height and the temperature lowered to harden the phase change material 56. The cartridge 40 can then be attached to the heat sink 58 using a sealant or adhesive.

[0037] As shown in exploded form in FIG. 3, the cartridge 40 is installed between a heat sink 58 and electrical device. The electrical device includes PCB 60 having an electrical device component 62 attached thereto via a ball grid array (BGA) 64. Silicon die 66 is a part of component 62 and a thermal interface material (TIM) 68 is connected to silicon die 66 to provide for thermal conductivity between silicon die 66 and the thermal conductor 40.

[0038] In use, the thermal connector cartridge 40 is placed between the heat sink 58 and the device component 62 (or multiple components). Desirably the cartridge is attached to the heat sink 58 such as by adhesive or other mechanical means such as fasteners. The assembly is deployed by heating to the melting point of the phase change material 56, which allows the spring 46 to expand or contract and engage the heat spreader 44 with the TIM 68 or component 62 on the other side. The flexible membrane 52 will expand or contract as needed to accommodate this expansion or contraction of the phase change material 56.

[0039] As discussed above, the tolerance between a heat sink and heat generating component in an electrical device ranges from about 0.1 mm to about 3 mm, more specifically about ---, and is typically about 0.8 mm. Accordingly, the cartridge should be an appropriate thickness to fit within the gap and the spring should be able to expand to fill the gap.

[0040] The elements in this embodiment can have essentially the same properties as in the embodiment discussed above. Frame 42 can be made out of a number of materials. One option is aluminum and another option is a high melting point plastic. The frame can be a variety of sizes and is at least partially dependent on the size of the heat spreader. For an example, a frame that is about 35 mm square and having 3 mm thick walls works well with a heat spreader that is 20 mm square.

[0041] FIG. 4 further illustrates the cartridge 40 of the embodiment shown in FIG. 3. Frame 42 circumferentially surrounds the heat spreader 44 which has spring 46 attached thereto. Flexible membrane 52 encloses the void between the heat spreader 44 and frame 42 on one side thereof. The cartridge 40 as shown here has not yet been filed with phase change material.

[0042] Alternative embodiments, examples, and modifications which would still be encompassed by the disclosure may be made by those skilled in the art, particularly in light of the foregoing teachings. Further, it should be understood that the terminology used to describe the disclosure is intended to be in the nature of words of description rather than of limitation.

[0043] Those skilled in the art will also appreciate that various adaptations and modifications of the preferred and alternative embodiments described above can be configured without departing from the scope and spirit of the disclosure. Therefore, it is to be understood that, within the scope of the appended claims, the disclosure may be practiced other than as specifically described herein.

CLAIMS:

We claim:

1. A thermal connector configured to be placed in a recess of a heat sink, between a heat generating component and the heat sink and transfer heat from the component to the heat sink, comprising;

a heat spreader configured to fit within the recess of the heat sink;

a spring configured to sit between the heat spreader and the heat sink and bias the heat spreader towards and away from the heat sink;

a flexible membrane attached to the heat sink and to the heat spreader, so that the membrane seals off the recess; and

a phase change material that fills the void defined by the heat sink, flexible membrane, and heat spreader;

wherein the flexible membrane allows the phase change material to contract or expand in response to the movement of the heat spreader towards or away from the heat sink.

2. The thermal connector of claim 1, wherein the thermal connector is configured to be able to make a thermal connection between the heat spreader and the heat generating component.

3. The thermal connector of claim 1 wherein the flexible membrane is a silicone or urethane polymer.

4. The thermal connector of claim 1 wherein the phase change material is a low melting alloy.

5. The thermal connector of claim 1, wherein the phase change material has a melting point between about 40 °C to 250 °C and a thermal conductivity between about 20 W/mK and 400 W/mK.

6. The thermal connector of claim 1, wherein the phase change material has a melting point between about 60 °C to 160 °C and a thermal conductivity between about 30 W/mK and 100 W/mK.

7. The thermal connector of claim 4 wherein the low melting alloy has a melting point of about 118 °C and a thermal conductivity of about 35 W/mK.

8. The thermal connector of claim 1 wherein the heat generating component is an electrical device component.

9. The thermal connector of claim 1, wherein the spring is configured to bias the heat spreader within a range of 0.1 mm to 3 mm.

10. The thermal conductor of claim 1 wherein the spring has a body portion attached to the heat spreader and three leg portions extending away from the heat spreader.

11. A thermal connector cartridge to be placed between a heat sink and a heat generating component, comprising:

a heat spreader;

a spring fixed to the heat spreader;

a frame extending around the circumference of the heat spreader and defining a void between the frame and the perimeter of the heat spreader;

a phase change material filling the void; and

a flexible membrane that contains the phase change material within the void and allows the alloy to contract and expand in response to the movement of the heat spreader towards and away from the heat sink.

12. The thermal connector cartridge of claim 11, wherein the frame is configured to be attached to the heat sink.

13. The thermal connector cartridge of claim 11, wherein the thermal connector cartridge is configured to be able to make a thermal connection between the heat spreader and the heat generating component.

14. The thermal connector of claim 1 wherein the flexible membrane is a silicone or urethane polymer.

15. The thermal connector of claim 1 wherein the phase change material is a low melting alloy.

16. The thermal connector of claim 1, wherein the phase change material has a melting point between about 40 °C to 250 °C and a thermal conductivity between about 20 W/mK and 400 W/mK.

17. The thermal connector of claim 1, wherein the phase change material has a melting point between about 60 °C to 160 °C and a thermal conductivity between about 30 W/mK and 100 W/mK.

18. The thermal connector of claim 4 wherein the low melting alloy has a melting point of about 118 °C and a thermal conductivity of about 35 W/mK.

19. The thermal connector of claim 1, wherein the spring is configured to bias the heat spreader within a range of 0.1 mm to 3 mm.

20. A method to thermally connect a heat generating component and a heat sink having a gap there between comprising the steps:

providing a thermal connecter comprising:

a heat spreader and a spring biased to move the heat spreader towards and away from the heat sink;

a low melting point alloy surrounding the spring;

a flexible membrane that contains the low melting point alloy within the gap and allows the alloy to contract and expand in response to the movement of the heat spreader towards and away from the heat sink; and

placing the thermal connector in the gap between the heat sink and the heat generating component.

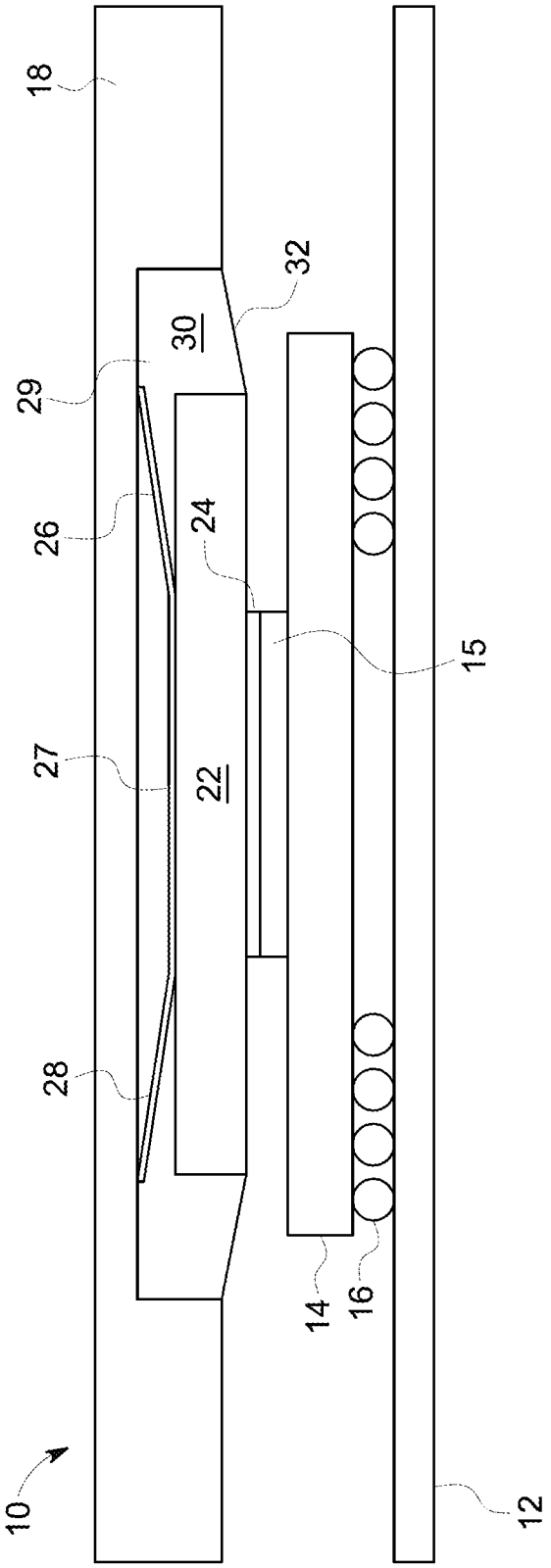

FIG. 1

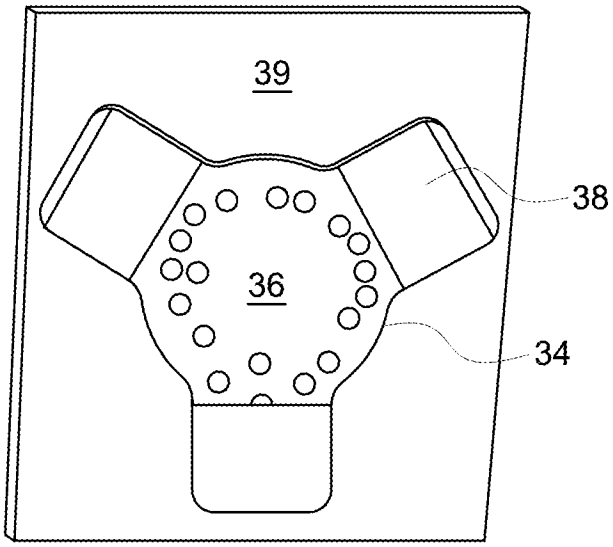

FIG. 2

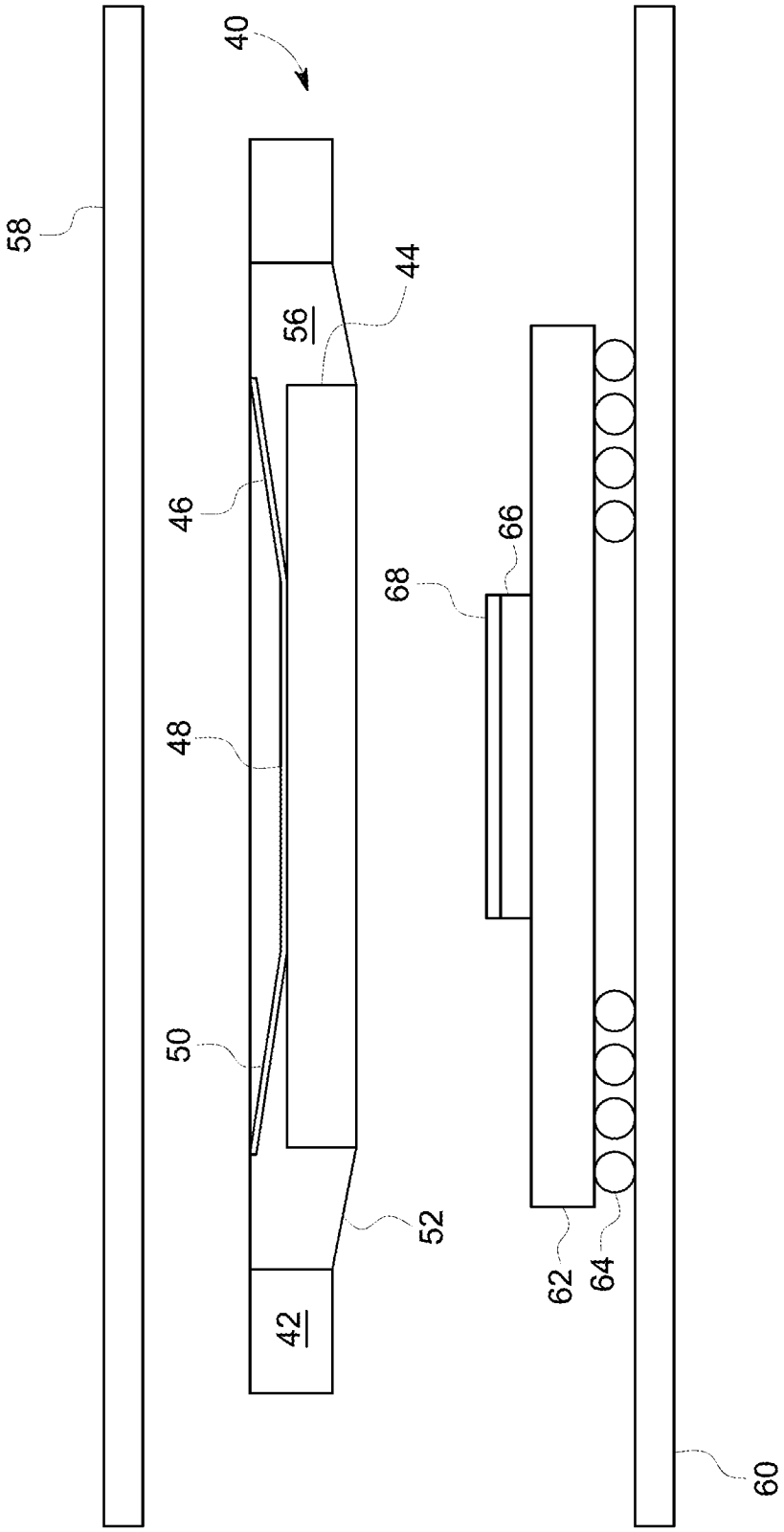

FIG. 3

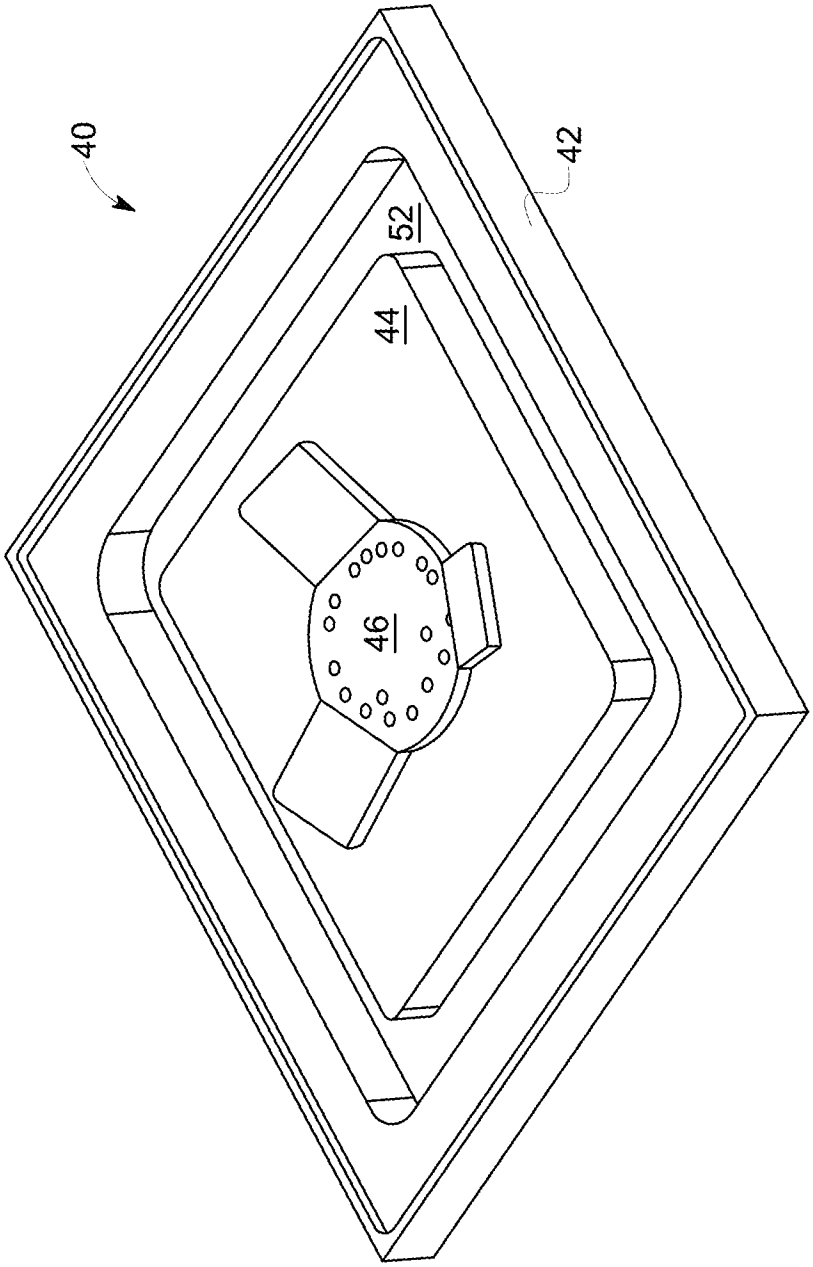

FIG. 4

INTERNATIONAL SEARCH REPORT

International application No
PCT/US2013/023402

A. CLASSIFICATION OF SUBJECT MATTER
INV. H01L23/427 H01L23/433
ADD.

According to International Patent Classification (IPC) or to both national classification and IPC

B. FIELDS SEARCHED

Minimum documentation searched (classification system followed by classification symbols)
H01L

Documentation searched other than minimum documentation to the extent that such documents are included in the fields searched

Electronic data base consulted during the international search (name of data base and, where practicable, search terms used)

EPO-Internal, WPI Data

C. DOCUMENTS CONSIDERED TO BE RELEVANT

Category*	Citation of document, with indication, where appropriate, of the relevant passages	Relevant to claim No.
X	US 2009/146292 A1 (DRAKE PETER J [US] ET AL) 11 June 2009 (2009-06-11) paragraphs [0021], [0036], [0037], [0058]; figure 9 -----	1,2, 4-10, 15-19
X	US 2003/178174 A1 (BELADY CHRISTIAN L [US] ET AL) 25 September 2003 (2003-09-25)	11-13,20
A	paragraphs [0019] - [0024]; figures 3-6 -----	1
A	DE 198 11 603 A1 (ADVANTEST CORP [JP]) 24 September 1998 (1998-09-24) column 4, line 1 - column 5, line 19; figure 1 -----	1,11,20
A	JP 2009 026870 A (DENSO CORP) 5 February 2009 (2009-02-05) abstract; figure 9 -----	1,11,20

-/--

[X] Further documents are listed in the continuation of Box C.

[X] See patent family annex.

* Special categories of cited documents :

"A" document defining the general state of the art which is not considered to be of particular relevance

"E" earlier application or patent but published on or after the international filing date

"L" document which may throw doubts on priority claim(s) or which is cited to establish the publication date of another citation or other special reason (as specified)

"O" document referring to an oral disclosure, use, exhibition or other means

"P" document published prior to the international filing date but later than the priority date claimed

"T" later document published after the international filing date or priority date and not in conflict with the application but cited to understand the principle or theory underlying the invention

"X" document of particular relevance; the claimed invention cannot be considered novel or cannot be considered to involve an inventive step when the document is taken alone

"Y" document of particular relevance; the claimed invention cannot be considered to involve an inventive step when the document is combined with one or more other such documents, such combination being obvious to a person skilled in the art

"&" document member of the same patent family

Date of the actual completion of the international search	Date of mailing of the international search report
22 April 2013	29/04/2013

Name and mailing address of the ISA/	Authorized officer
European Patent Office, P.B. 5818 Patentlaan 2 NL - 2280 HV Rijswijk Tel. (+31-70) 340-2040, Fax: (+31-70) 340-3016	Zeisler, Peter

1

Form PCT/ISA/210 (second sheet) (April 2005)

INTERNATIONAL SEARCH REPORT

International application No
PCT/US2013/023402

C(Continuation). DOCUMENTS CONSIDERED TO BE RELEVANT

Category*	Citation of document, with indication, where appropriate, of the relevant passages	Relevant to claim No.
A	US 2008/073775 A1 (BRUNSCHWILER THOMAS J [CH] ET AL) 27 March 2008 (2008-03-27) paragraphs [0042], [0043]; figure 13 -----	1
A	EP 0 875 933 A2 (HEWLETT PACKARD CO [US]) 4 November 1998 (1998-11-04) column 6, lines 11-50; figures 3,4 -----	11

1

INTERNATIONAL SEARCH REPORT

Information on patent family members

International application No
PCT/US2013/023402

Patent document cited in search report	Publication date	Patent family member(s)	Publication date
US 2009146292 A1	11-06-2009	EP 2232550 A1	29-09-2010
		US 2009146292 A1	11-06-2009
		WO 2009075930 A1	18-06-2009
US 2003178174 A1	25-09-2003	US 2003178174 A1	25-09-2003
		US 2004194915 A1	07-10-2004
DE 19811603 A1	24-09-1998	DE 19811603 A1	24-09-1998
		JP 3501918 B2	02-03-2004
		JP H10260230 A	29-09-1998
		US 6081428 A	27-06-2000
JP 2009026870 A	05-02-2009	JP 4910922 B2	04-04-2012
		JP 2009026870 A	05-02-2009
US 2008073775 A1	27-03-2008	NONE	
EP 0875933 A2	04-11-1998	DE 69807567 D1	10-10-2002
		DE 69807567 T2	30-04-2003
		EP 0875933 A2	04-11-1998
		JP H10308485 A	17-11-1998
		US 6037659 A	14-03-2000