BEST AVAILABLE COPY

Jan. 25, 1949. A. T. HALBING 2,460,173

SQUARE LAMP GUARD

Filed March 19, 1945 2 Sheets-Sheet 1

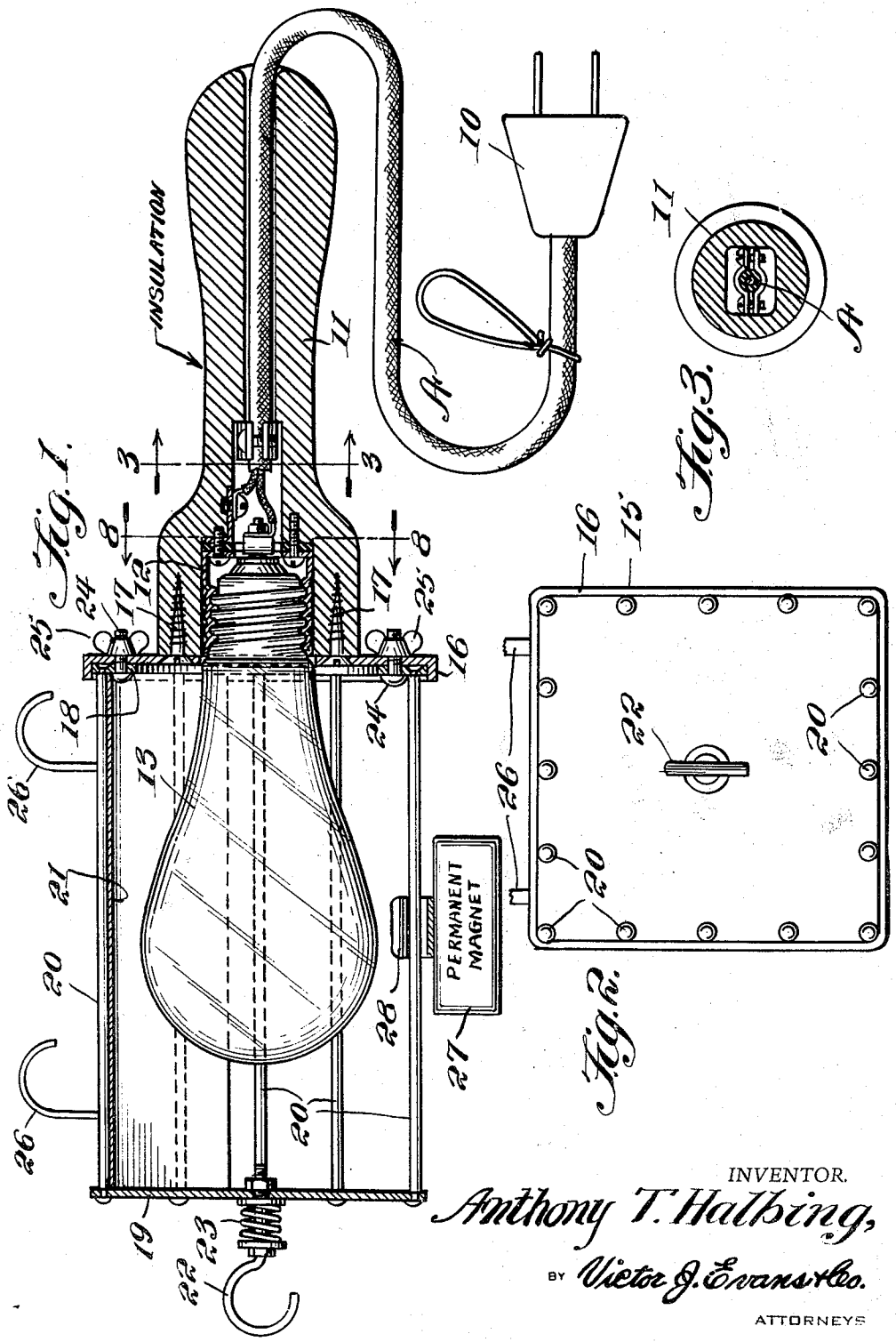

Fig. 1.

Fig. 2.

Fig. 3.

INVENTOR.
Anthony T. Halbing,
BY Victor J. Evans & Co.
ATTORNEYS

Jan. 25, 1949. A. T. HALBING 2,460,173

SQUARE LAMP GUARD

Filed March 19, 1945 2 Sheets-Sheet 2

Fig. 4.

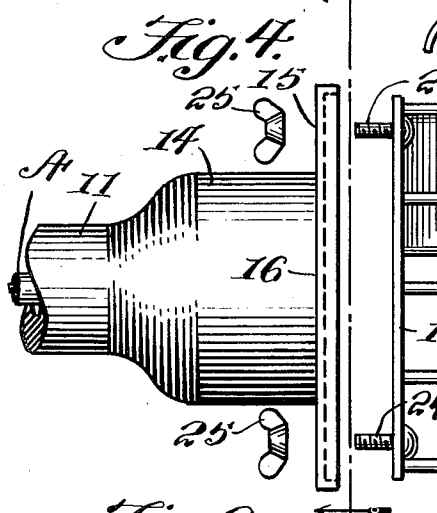

Fig. 5.

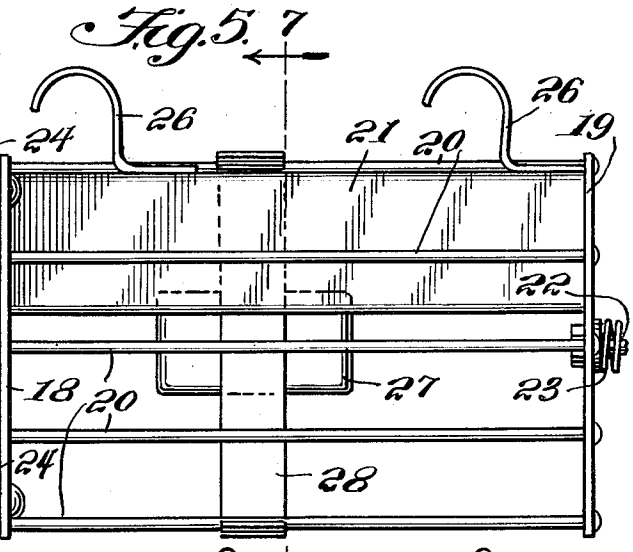

Fig. 6.

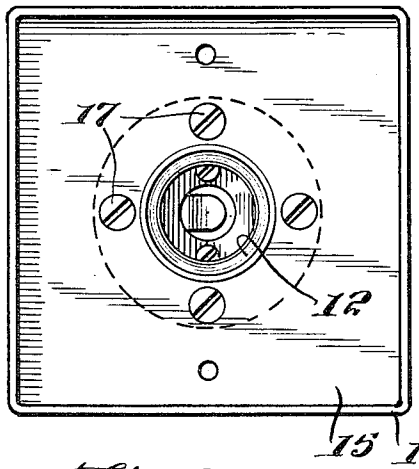

Fig. 7.

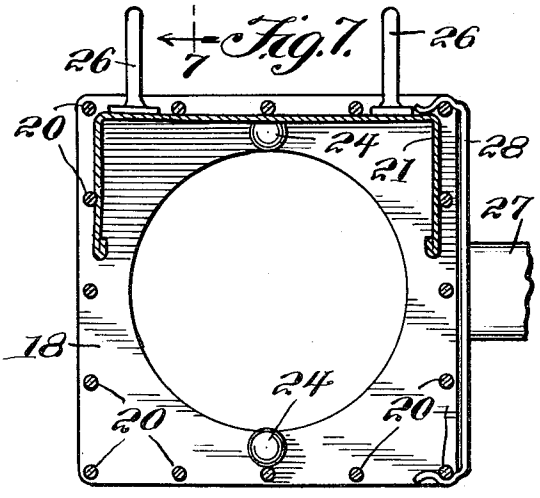

Fig. 8.

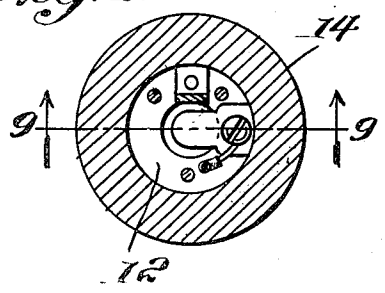

Fig. 9.

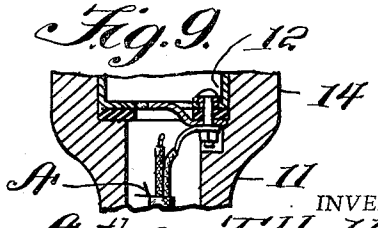

INVENTOR.

Anthony T. Halbing,

BY Victor J. Evans & Co.

ATTORNEYS

Patented Jan. 25, 1949 2,460,173

UNITED STATES PATENT OFFICE

2,460,173

SQUARE LAMP GUARD

Anthony T. Halbing, Waterbury, Conn.

Application March 19, 1945, Serial No. 583,525

2 Claims. (Cl. 240—54)

1

The invention relates to an electrically lighted lamp guard or shield, and more especially to an electric bulb guard or shield attachment for trouble lamps.

The primary object of the invention is the provision of an attachment of this character, wherein the handle of the electric extension trouble lamp has detachably fitted thereto a bulb shield or protective guard, which is of special conformation, so as to prevent rolling when at rest, and also to permit the hanging thereof from a support, either through suspension hooks or a permanent electric magnet, that the lamp will be properly positioned to the work during the use thereof.

Another object of the invention is the provision of an attachment of this character, wherein the shield or guard is conveniently removable, so that easy access can be had to the bulb, and also will perfectly shield the latter, the attachment being of novel construction and unique in its arrangement for safe and required services in the use thereof.

A further object of the invention is the provision of an attachment of this character, which is simple in construction, thoroughly reliable and efficient in operation, strong, durable, enabling the lamp to be suspended in a vertical or horizontal position, to be firm and steady in either position, and inexpensive to manufacture and install.

With these and other objects in view the invention consists in the features of construction, combination and arrangement of parts as will be hereinafter more fully described, illustrated in the accompanying drawings, which disclose the preferred embodiments of the invention, and pointed out in the claims hereunto appended.

In the accompanying drawings:

Figure 1 is a vertical longitudinal sectional view through the lamp and the attachment constructed in accordance with the invention.

Figure 2 is an outer end view thereof.

Figure 3 is a sectional view taken on the line 3—3 of Figure 1 looking in the direction of the arrows.

Figure 4 is a side elevation showing the attachment detached.

Figure 5 is a side view of the attachment in its released position.

Figure 6 is a sectional view taken on the line 6—6 of Figure 4 looking in the direction of the arrows.

Figure 7 is a sectional view taken on the line 7—7 of Figure 5 looking in the direction of the arrows.

2

Figure 8 is a sectional view taken on the line 8—8 of Figure 1 looking in the direction of the arrows.

Figure 9 is a sectional view taken on the line 9—9 of Figure 8 looking in the direction of the arrows.

Similar reference characters indicate corresponding parts throughout the several views in the drawings.

Referring to the drawings in detail, A designates generally an electric extension cord of any standard construction, having at one end a separable electric contact plug 10, of the usual type, and at the other end of this cord is an insulated handle 11, as best seen in Figure 1 of the drawings. This handle 11 carries an electric light bulb socket 12 for electric current supply to an electric light bulb 13, which is detachably fitted within the said socket 12 in the ordinary well known manner. The socket 12 is countersunk in the head 14 of the handle 11.

Attached to the head 14 is a carrier plate 15 which at its border formation is squared, or of substantially equilateral rectangular shape, it being made of any suitable material, flat faced, and at the border there is provided a continuous outturned rim or flange 16, the plate 15 being preferably secured to the head 14 by screws 17, although it may be otherwise fastened in place, and has a clearance for the bulb 13 at the center thereof.

Seated against this plate 15 within the border thereof is a protective bulb guard or shield, involving end pieces 18 and 19, respectively, which are of square border formation, having therebetween and riveted or otherwise joined thereto, longitudinally disposed spaced outer guard rods 20, to effect with the pieces of canopy for the bulb 13 when confined within the shield or guard proper. The rods 20 are so arranged near the edges of the pieces 18 and 19, to create a square frame formation or a flat sided shield or guard, so that when at rest it will not roll on a support when such shield or guard is placed thereon. The end plate or piece 18 has a clearance therein for the slipping of the bulb therethrough to the interior of the said shield or guard in replacing bulb.

Carried by certain of the rods 20 innermost thereto is a reflector 21 for projection of light from the bulb 13, when lighted.

Centrally of the piece 19 is mounted a swivel hook 22, having a tensioning spring 23, the hook

being outside of the guard or shield and enables the hanging of the lamp for vertical suspension thereof.

The piece 18 is detachably held on the plate 15 through the use of bolts 24 carrying winged nuts 25, the bolts being passed through the piece and the plate, respectively.

On the laterally outermost rods 20 at one side of the guard or shield are remotely spaced hanger hooks 26, these being four in number and are best seen in Figures 5 and 7 of the drawings, so that the lamp can be horizontally hung and supported against rolling motion when in service.

In association with the guard or shield is a permanent magnet 27, it being fixed to a clip 28, which is adapted for detachable engagement with certain of the rods 20 at selected sides of the shield or guard, so that the latter can be hung in stationary position by the use of this magnet fixture for support on any magnetic medium or substance. The lamp is usable with or without this magnet 27, as should be obvious.

What is claimed is:

1. A magnetic fixture for holding a portable electrical appliance in the form of a trouble lamp, comprising a handle, a recess in said handle, an electric light bulb socket in said recess, a carrier plate mounted on said handle, a central aperture in said plate in alinement with said recess, an out-turned rim on said plate, an electric light bulb guard having flat sides thereto secured to said plate within said flange, said guard involving outer protective rods, a clip snugly fitting a selective side and having detachable connection with certain of the rods thereof, and a permanent magnet carried by said clip.

2. A guard attachment for trouble lamp electrically lighted, comprising a flat sided open-work enclosure for a bulb of the lamp, and having an end piece, a supporting member on the lamp comprising a flat faced plate having an out-turned flange and having the end piece seated therein within said flange, means detachably connecting the member and piece together, a swivelled hook on the enclosure for vertically suspending the same, a braking spring on said hook to retain said enclosure at a fixed angle to the vertical as desired, a plurality of hooks on the enclosure for horizontally suspending it, and a permanent magnet detachably connected to the enclosure exteriorly thereof.

ANTHONY T. HALBING.

REFERENCES CITED

The following references are of record in the file of this patent:

UNITED STATES PATENTS

Number	Name	Date
870,637	Molitor	Nov. 12, 1907
1,405,221	Jenkins	Jan. 31, 1922
2,125,540	Knowles	Aug. 2, 1938
2,225,391	Pierce	Dec. 17, 1940

FOREIGN PATENTS

Number	Country	Date
450,700	France	Jan. 25, 1913
603,846	France	Jan. 14, 1926