April 11, 1967 N. MUDANO 3,313,510

DOWEL

Filed Jan. 20, 1966

FIG. 1

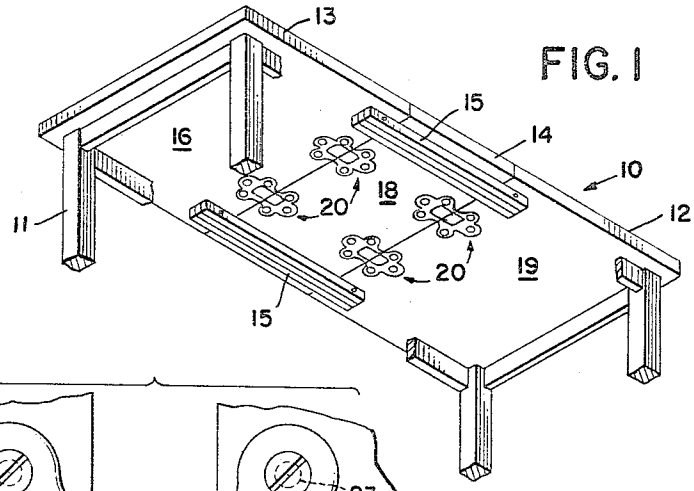

FIG. 2

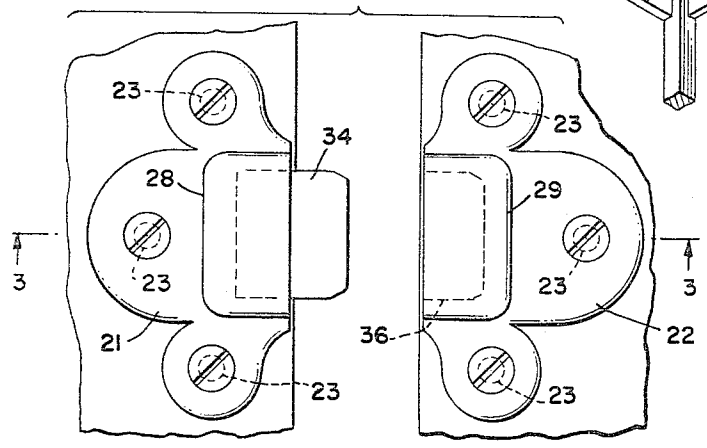

FIG. 3

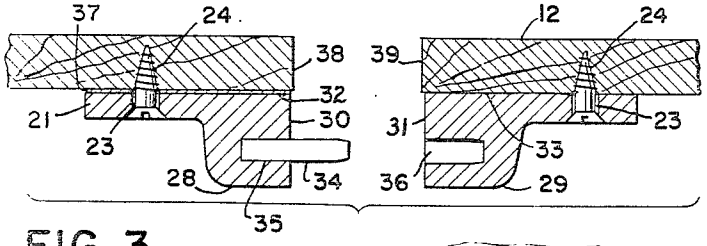

FIG. 4

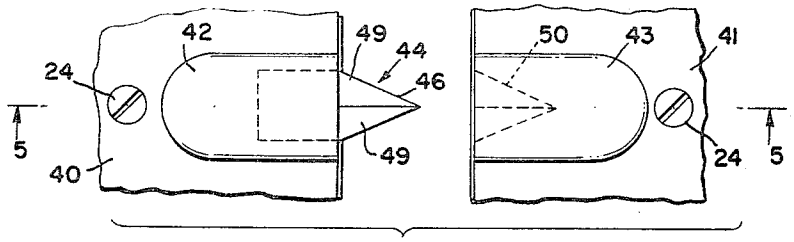

FIG. 5

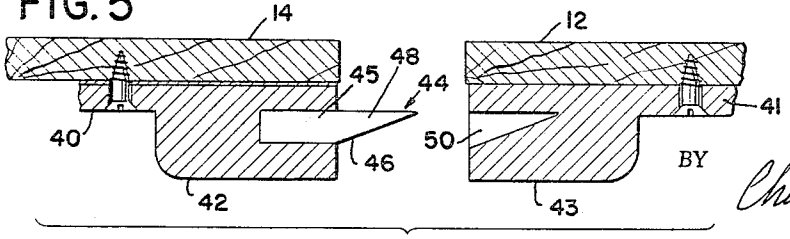

INVENTOR.
NATALE MUDANO
BY
Charles Marks
ATTORNEY

United States Patent Office 3,313,510 Patented Apr. 11, 1967

3,313,510

DOWEL

Natale Mudano, 1130 Leland Ave., Bronx, N.Y. 10472

Filed Jan. 20, 1966, Ser. No. 521,953
3 Claims. (Cl. 248—244)

This invention relates to dowels such as are removably engageable with wooden inserts used to extend the surfaces of furniture such as tables and the like.

Heretofore, it has been customary to accomplish such extensions by providng one or more wooden centerpiece accommodated between laterally adjustable, table members, which may thereafter be engaged with such centerpieces by means of dowels and mating sockets provided upon vertical faces of said adjustable members or centerpieces. Such arrangements have been intended to attain a substantially continuous table top, which is free from any play or motion between the members thus united.

However, it has been observed that unless the dowels are perfectly aligned with their mating sockets, it will be difficult to assemble the table top without the formation of cracks or spaces between the members intended for connection by the dowels. Moreover, with the passage of time, the mating surfaces of the dowels and their sockets will wear, thereby permitting a substantial amount of play between them and a corresponding displacement of the table members from which they depend.

Once they have reached this state, it is usually impracticable and uneconomical to provide new dowels and sockets upon the table involved.

The present invention solves these problems. Thus, it is an object of the present invention to provide an adjustable dowel and socket assembly which can be easily assembled with adjustable table members and centerpieces therein and which can be aligned to insure that such members and centerpieces can be associated to form a continuous surface.

Another object of the invention is to provide an adjustable dowel and socket assembly which is characterized by a minimum of wear despite repeated use.

A further object of the invention is to provide dowel and socket means which can be easily removed from the furniture with which it is employed and which can be replaced with other dowel and socket means, as desired.

A still further object of the present invention is to provide dowel and socket means of sturdy and economical design.

Other objects and advantages of the present invention will become apparent from the following discussion as read in connection with the accompanying drawing.

In the drawing:

FIGURE 1 is a perspective view of a table employing a plurality of one embodiment of the invention;

FIGURE 2 is a fragmentary bottom view of an open position of said embodiment of the invention;

FIGURE 3 is a cross-sectional view taken about the line 3—3 of FIGURE 2;

FIGURE 4 is a fragmentary bottom view of an open position of a modified form of the invention;

FIGURE 5 is a cross-sectional view taken about the line 5—5 of FIGURE 4.

Throughout the various views, similar numerals are employed to designate similar parts of the invention.

As shown in the accompanying drawing, the present invention may be employed with a table of conventional design, generally designated by the numeral **10** and including legs **11** supporting a table top comprising horizontal end members **12, 13** and a centerpiece **14** disposed intermediately of said end members **12, 13**. Said end members **12, 13** and centerpiece **14** are also slidably connected in the conventional manner by suitable crosspieces **15** depending from the end members **12, 13**.

FIGURE 1 depicts the aforesaid members of the table **10** in a closed position, i.e., in the position wherein the centerpiece **14** is assembled in abutment with the end members **12, 13**. As may be seen in FIGURE 1, the lower surfaces **16, 18, 19** of the end members **12, 13** and centerpiece **14** are provided with a plurality of one form of the present invention, generally designated by the numeral **20**, whose structure and function can be more fully understood from the following description.

As may be seen in FIGURES 2 and 3 of the drawing, the last-mentioned form of the invention includes a pair of bracket members **21, 22** provided with a plurality of apertures **23**. Suitable fastening members such as screws **24** may be received in said apertures **23** and engaged with members intended for connection such as the centerpiece **14** and the adjacent end member **12**.

Each of the bracket members **21, 22** is provided with a boss **28, 29** having a face **30, 31** disposed perpendicularly with respect to the base **32, 33** of the respective bracket members **21, 22**.

One boss **28** is provided with a generally rectangular dowel **34** which projects from a suitable aperture **35** formed in the boss **28**. The dowel **34** is slidably receivable within a socket **36** formed in the boss **29**, said dowel **34** being received in said socket **36** when the centerpiece **14** is disposed in abutment with the end member **12**, as by bringing together in the conventional manner surfaces **38, 39** of said centerpiece **14** and end member **12**.

It will be observed that the faces **30, 31** of the bosses **28, 29** are laterally offset with respect to surfaces **38, 39**, so that said faces **30, 31** will be in spaced relation when the surfaces **38, 39** abut each other, thereby permitting the upper surfaces of the centerpiece **14** and end member **12** to form a substantially continuous surface when the dowel **34** is fully engaged with the socket **36**. Such surface continuity is in no way obstructed by the interference of any portion of the present invention.

It will also be observed that by interposing a suitable shim stock **37** between the base **33** of one bracket member **21** and the centerpiece **14**, the dowel **34** can be vertically adjusted with respect to the socket **36**. Similarly, there is sufficient clearance between the screws **24** and the apertures **23**, so as to allow a small lateral adjustment of the dowel **34** and socket **36**. Such adjustability permits the dowel **34** and socket **36** to be aligned so that they may be engaged and disengaged with a minimum of wear and without interfering with the abutment of the centerpiece **14** and end member **12**.

However, if, for any reason, the dowel **34** or socket **36** should become damaged or worn, or if, for any other reason, they should be inoperative, the above-described units comprising said bracket members and bosses may be removed from the centerpiece **14** and end member **12** and replaced by other similar units, as desired.

So, also, if the dowel **34** and socket **36** in the units previously described require adjustment not permitted by the shim stock **37** or clearance between the screws **24** and apertures **23**, such adjustment can be achieved by appropriate alignment of said dowel **34** and socket **36** after removal of said units and readjusting them in the desired position in another suitable location on said centerpiece **14** and end member **12**.

It is to be understood that the above-described structures are only illustrative of one form of the invention and that other forms thereof may also be employed to achieve the objects of the invention. For example, FIGURES 4 and 5 of the drawing depict a modified form of the invention wherein the bracket members **40, 41** depending from the centerpiece **14** and end member **12** are provided with elongated bosses **42, 43**. The boss **42** is provided with a dowel, generally designated by the nu-

meral **44** and having a rectangular shank **45**. Said dowel **44** also includes a wedge-shaped projection **46** having a horizontal upper surface **48** and lower inclined surfaces **49**, each of which surfaces **48**, **49** conforms with the periphery of a socket **50** wherein said wedge-shaped projection **46** is received when the centerpiece **14** and end member **12** are brought into abutment.

It will be seen that the above-described forms of the invention achieve its objects in a simple but ingenious manner and that their flanges and bosses may assume a variety of attractive forms, as desired.

The embodiments of the invention illustrated and described hereinabove have been selected for the purpose of clearly setting forth the principles involved. It will be apparent, however, that the present invention is susceptible to being modified in respect to details of construction, combination and arrangement of parts which may be resorted to without departure from the spirit and scope of the invention as claimed.

I claim:

1. Means removably connecting abuttable panel members together comprising;

(a) a bracket member depending from each of said panel members, each of said bracket members having a boss,

(b) a dowel extending from the boss on one bracket member beyond the edge of the panel member to which it is attached,

(c) a socket provided in the boss on the other bracket member receiving said dowel and fully enclosing the same, said other bracket member being offset from the end of its associated panel member, and

(d) means removably securing said bracket members to said panel members.

2. A device according to claim **1**, said dowel having a generally rectangular conformation.

3. A device according to claim **1**,

(a) said dowel including a wedge shaped element;

(b) the periphery of said socket conforming with said wedge-shaped element when said abuttable panel members are engaged.

References Cited by the Examiner

UNITED STATES PATENTS

2,530,892	11/1950	Mayo	248—31
3,236,487	2/1966	Chakeres	248—244

CLAUDE A. LE ROY, *Primary Examiner.*