(12) INTERNATIONAL APPLICATION PUBLISHED UNDER THE PATENT COOPERATION TREATY (PCT)

(19) World Intellectual Property Organization
International Bureau

(43) International Publication Date
27 July 2017 (27.07.2017)

WIPO | PCT

(10) International Publication Number
WO 2017/127796 A1

(51) International Patent Classification:
A01N 65/22 (2009.01) *A01N 43/00* (2006.01)
A01N 25/00 (2006.01) *A01N 65/00* (2009.01)
A01N 25/02 (2006.01) *A01P 17/00* (2006.01)

(21) International Application Number:
PCT/US2017/014540

(22) International Filing Date:
23 January 2017 (23.01.2017)

(25) Filing Language: English

(26) Publication Language: English

(30) Priority Data:
62/281,418 21 January 2016 (21.01.2016) US

(71) Applicant: **PENTA 5 USA, LLC** [US/US]; 1610 North Gate Blvd., Sarasota, FL 32434 (US).

(72) Inventors: **MURRAY, R., Charles**; 1800 Ben Franklin Drive, Suite B-107, Sarasota, FL 34236 (US). **HARLIN, John**; 1712 Northgate Boulevard, Sarasota, FL 34234 (US).

(74) Agents: **MACKENZIE, Kevin, S.** et al.; Dinsmore & Shohl LLP, 900 Wilshire Drive, Suite 300, Troy, MI 48084 (US).

(81) Designated States *(unless otherwise indicated, for every kind of national protection available)*: AE, AG, AL, AM, AO, AT, AU, AZ, BA, BB, BG, BH, BN, BR, BW, BY, BZ, CA, CH, CL, CN, CO, CR, CU, CZ, DE, DJ, DK, DM, DO, DZ, EC, EE, EG, ES, FI, GB, GD, GE, GH, GM, GT, HN, HR, HU, ID, IL, IN, IR, IS, JP, KE, KG, KH, KN, KP, KR, KW, KZ, LA, LC, LK, LR, LS, LU, LY, MA, MD, ME, MG, MK, MN, MW, MX, MY, MZ, NA, NG, NI, NO, NZ, OM, PA, PE, PG, PH, PL, PT, QA, RO, RS, RU, RW, SA, SC, SD, SE, SG, SK, SL, SM, ST, SV, SY, TH, TJ, TM, TN, TR, TT, TZ, UA, UG, US, UZ, VC, VN, ZA, ZM, ZW.

(84) Designated States *(unless otherwise indicated, for every kind of regional protection available)*: ARIPO (BW, GH, GM, KE, LR, LS, MW, MZ, NA, RW, SD, SL, ST, SZ, TZ, UG, ZM, ZW), Eurasian (AM, AZ, BY, KG, KZ, RU, TJ, TM), European (AL, AT, BE, BG, CH, CY, CZ, DE, DK, EE, ES, FI, FR, GB, GR, HR, HU, IE, IS, IT, LT, LU,

[Continued on next page]

(54) Title: MOSQUITO CONTROL PRODUCT

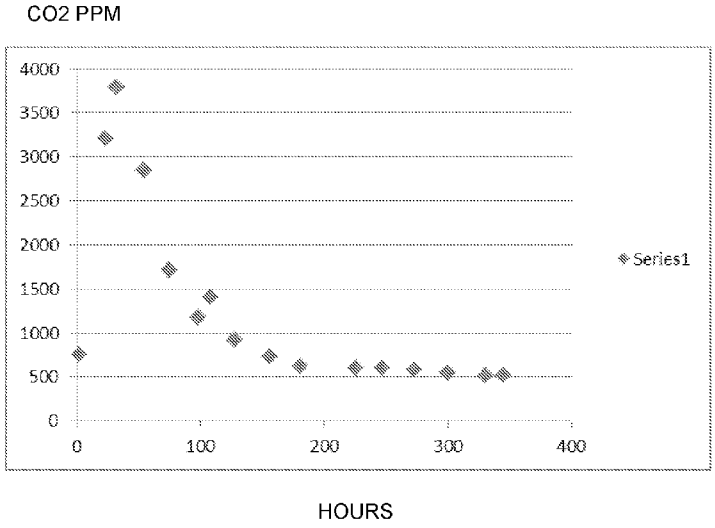

Figure 20

[Continued on next page]

WO 2017/127796 A1

LV, MC, MK, MT, NL, NO, PL, PT, RO, RS, SE, SI, SK, SM, TR), OAPI (BF, BJ, CF, CG, CI, CM, GA, GN, GQ, GW, KM, ML, MR, NE, SN, TD, TG).

Published:

— *with international search report (Art. 21(3))*

(57) Abstract: A mosquito control product includes a two part composition including separated wet and dry ingredients. The wet and dry ingredients include active and inert ingredients. The active ingredients include thyme, rosemary, cinnamon, and citronella oil and the inert ingredients include water, sugar, yeast, wheat flour, sodium bicarbonate, and licorice extract. When the wet and dry ingredients are combined they form a carrier agent contacting a mosquito with the active ingredients wherein the mosquito is discouraged from seeking a blood meal.

MOSQUITO CONTROL PRODUCT

CROSS-REFERENCE TO RELATED APPLICATIONS

[0001] The instant application claims priority to U.S. Provisional Application Serial No. 62/281,418 filed January 21, 2016, the entire contents of which are incorporated herein by reference.

FIELD OF THE INVENTION

[0002] The instant application is directed to a formulation for controlling or modifying the biting behavior of mosquitos.

BACKGROUND OF THE INVENTION

[0003] Mosquito bites often cause annoying reactions in humans and animals. Additionally, mosquito bites are a vector for many types of disease including: malaria, Dengue Fever, Chikungunya, West Nile and Zika viruses as well as other forms of disease.

[0004] There is a need to prevent mosquitos from biting a host to lessen the discomfort of a bite reaction and to prevent the potential spread of a disease.

[0005] Accordingly, a natural non-toxic ingredient based product that alters a mosquito's biting behavior preventing bites to humans and animals would be desirable.

SUMMARY OF THE INVENTION

[0006] In one aspect, there is disclosed a mosquito control product that includes a two part composition including separated wet and dry ingredients. The wet and dry ingredients include active and inert ingredients. When the wet and dry ingredients are combined they form a carrier agent contacting a mosquito with the active ingredients wherein the mosquito is discouraged from seeking a blood meal.

[0007] In another aspect, there is disclosed a mosquito control product that includes a two part composition including separated wet and dry ingredients. The wet and dry ingredients include active and inert ingredients. The active ingredients include thyme, rosemary, cinnamon, and citronella oil and the inert ingredients include water, sugar, yeast, wheat flour, sodium bicarbonate, and licorice extract. When the wet and dry ingredients are combined they form a carrier agent contacting a mosquito with the active ingredients wherein the mosquito is discouraged from seeking a blood meal.

[0008] In yet another aspect, there is disclosed a mosquito control product that includes a two part composition including separated wet and dry ingredients. The wet and dry ingredients include active and inert ingredients. The dry ingredients are positioned in an upper compartment of a pouch and the wet ingredients are positioned in a lower compartment of a pouch. The upper and lower compartments are separated by a frangible seal. When the frangible seal is ruptured the wet and dry ingredients are combined and form a carrier agent exiting the pouch and contacting a mosquito with the active ingredients wherein the mosquito is discouraged from seeking a blood meal.

[0009] Additional features and advantages of mosquito control products described herein will be set forth in the detailed description which follows, and in part will be readily apparent to those skilled in the art from that description or recognized by practicing the embodiments described herein, including the detailed description which follows, the claims, as well as the appended drawings.

[0010] It is to be understood that both the foregoing general description and the following detailed description describe various embodiments and are intended to provide an overview or framework for understanding the nature and character of the claimed subject matter. The accompanying drawings are included to provide a further understanding of the various embodiments, and are incorporated into and constitute a part of this specification. The drawings

illustrate the various embodiments described herein and together with the description serve to explain the principles and operations of the claimed subject matter.

BRIEF DESCRIPTION OF THE DRAWINGS

[0011] FIG. 1 is a perspective view of a two-component flexible pouch according to one or more embodiments disclosed and described herein;

[0012] FIG. 2 is a side view of the flexible pouch depicted in FIG. 1;

[0013] FIG. 3 is a top view of the flexible pouch depicted in FIG. 1;

[0014] FIG. 4 is a front view of the flexible pouch depicted in FIG. 1;

[0015] FIG. 5 is another side view of the flexible pouch depicted in FIG. 1;

[0016] FIG. 6 is a rear view of the flexible pouch depicted in FIG. 1;

[0017] FIG. 7 is a bottom view of the flexible pouch depicted in FIG. 1;

[0018] FIG. 8 is a side view of the flexible pouch depicted in FIG. 2 hanging in a tilt position according to one or more embodiments disclosed and described herein;

[0019] FIG. 9 is a perspective view of a two-compartment flexible pouch according to one or more embodiments disclosed and described herein;

[0020] FIG. 10 is a side view of the flexible pouch depicted in FIG. 9;

[0021] FIG. 11 is a top view of the flexible pouch depicted in FIG. 9;

[0022] FIG. 12 is a rear view of the flexible pouch depicted in FIG. 9;

[0023] FIG. 13 is another side view of the flexible pouch depicted in FIG. 9;

[0024] FIG. 14 is a front view of the flexible pouch depicted in FIG. 9;

[0025] FIG. 15 is a bottom view of the flexible pouch depicted in FIG. 9; and

[0026] FIG. 16 is a side view of the flexible pouch depicted in FIG. 9 hanging in a tilt position according to one or more embodiments disclosed and described herein

[0027] Figure 17 is a plot of the CO_2 in parts per million as a function of time in hours for an embodiment of a mosquito control product;

[0028] Figure 18 is a plot of the CO_2 in parts per million as a function of time in minutes for an embodiment of a mosquito control product;

[0029] Figure 19 is a plot of the CO_2 in parts per million and time in minutes for various time intervals;

[0030] Figure 20 is a plot of the CO_2 in parts per million as a function of time in hours for an embodiment of a mosquito control product;

[0031] Figure 21 is a graphical representation of an experimental apparatus used for testing;

[0032] Figure 22 is a graphical depiction of an experimental apparatus positioned over a blood source;

[0033] Figure 23 is a graphical representation of an experimental apparatus including a circulating pump providing warm water to the testing apparatus.

DESCRIPTION OF THE EMBODIMENTS

[0034] The mosquito control product as described herein may be utilized to discourage mosquitos from taking a blood meal to thereby affect the reproduction cycle of the mosquito. In one aspect, the mosquito control product may include a two-part formulation including liquid and dry ingredients. The ingredients may be natural or nontoxic in nature to allow use near humans without fear of the toxicity of the product.

[0035] The liquid and dry ingredients may be separated from each other and then combined to activate the product, as will be discussed in more detail below. In one aspect, the liquid and dry ingredients may be separated from each other in a container such as a pouch as described in U.S. Patent Application No. 15/360,446 filed on November 23, 2016 which is incorporated herein by reference.

[0036] The liquid and dry ingredients may include both include inert and active ingredients as will be discussed in more detail below. In one aspect, the active ingredients may be referred to as confounding agents such that when a mosquito is exposed to them it will affect its desire for a blood meal. The active ingredients may include thyme, rosemary, cinnamon, and citronella oil. Inactive or inert ingredients may include water, sugar, yeast, wheat flour, sodium bicarbonate, and licorice extract.

[0037] When the liquid and dry ingredients are combined, the sugar and yeast react in a fermentation reaction to produce alcohol and carbon dioxide as well as lactic acid which may serve as an attractant to a mosquito. In this manner, the sugar and yeast produce a carrier agent (CO_2) for the active ingredients which include thyme, rosemary, cinnamon and citronella oil as described above. In one aspect, the CO_2 may attract the mosquito and act as the carrier for the active ingredients.

[0038] Various sugars may be utilized in the formulation. For example, glucose or sucrose may be utilized. In one aspect, the type and amount of sugar may affect how quickly the fermentation process begins and may vary the amount of carbon dioxide produced over a varying time period. The carbon dioxide produced by the fermentation reaction transports the active ingredients to come into contact with a mosquito. When the mosquito is exposed to the active ingredients, it will affect the desire to seek a blood meal.

[0039] The formulations as described herein may be packaged in a two component pouch structure as described below.

[0040] Referring to FIGS. 1-7, a flexible pouch for containing two separate products that may be brought into contact with each other upon rupture of an internal frangible seal is provided. The flexible pouch includes a front panel, a back panel and a pair of side seals. An upper compartment is formed between the front panel, the back panel, one of the pair of side seals and an intermediate side seal positioned between the pair of side seals. A bottom frangible

seal may separate the upper compartment from a lower compartment that is formed beneath the upper compartment between the front panel and the back panel. A vertical passage extends between the intermediate side seal and another of the pair of side seals from the lower compartment to an opening. Breaking through or rupturing of the bottom frangible seal provides a fluid passageway from the upper compartment to the lower compartment. A first product contained within the upper compartment may flow into the lower compartment containing a second product when the frangible seal is ruptured. Contact of the first product with the second product may generate or result in the creation of a desired third product. For example and without limitation, the first product may be a liquid, solid or gas, the second product may be a liquid, solid, or gas, and the third product may be a solid, liquid or gas that is formed when the first product comes into contact with the second product. The third product, e.g., a gas, can flow through the vertical passage and out of the opening in order to be released from or exit the flexible pouch.

[0041] Still referring to FIGS. 1-7, a two-compartment flexible pouch 10 includes a front panel 100 and a back panel 110. The front panel 100 may have a bottom edge portion 102, a top edge portion 104 and a pair of side edge portions 106 (FIG. 2). The back panel 110 may have a bottom edge portion 112, a top edge portion 114 and a pair of side edge portions 116 (FIG. 5). The front panel 100 may be attached to the back panel 110 with a bottom seal 122, a top seal 124 and a pair of side seals 126a, 126b. In embodiments, a gusset 130 (FIG. 7) can be positioned between the bottom edge portion 102 of the front panel 100 and the bottom edge portion 112 of the back panel 110 such that a stable base for the flexible pouch 10 is provided. That is, the gusset 130 may be attached to the bottom edge portions 102, 112 with the bottom seal 122 such that the flexible pouch 10 can stand or remain upright as depicted in FIGS. 1, 4, and 6.

[0042] In embodiments, the bottom seal 122, top seal 124 and pair of side seals 126a, 126b may be formed from a seal, e.g., a heat seal, that joins the bottom edge portions 102, 112

together, the top edge portions 104, 114 together and the side edge portions 106, 116 together. In other embodiments, one or more of the bottom seal 122, top seal 124 and pair of side seals 126a, 126b may be formed from a fold line created by folding a single panel to form the front panel 100 and back panel 110. Accordingly, the term "seal" as used herein refers to a boundary of an interior of the flexible pouch and may be formed by joining a portion of a front panel to a portion of a back panel, e.g., via a heat seal, or in the alternative, may be formed by folding a single panel to form a front panel and a back panel with a fold line there between.

[0043] The flexible pouch 10 may include an upper compartment 150 formed between the front panel 100, the back panel 110, one of the pair of side seals 126a, an intermediate side seal 108, and a bottom frangible seal 109. The bottom frangible seal 109 may extend from and between the intermediate side seal 108 to the side seal 126a. The flexible pouch 10 also includes a lower compartment 160 formed beneath the upper compartment 150 between the front panel 100 and the back panel 110. The flexible pouch 10 may also include a vertical passage 164 extending between the intermediate side seal 108 and another of the pair of side seals 126b from the lower compartment 160 to an opening 140. Rupture of the bottom frangible seal 109 provides a fluid passageway between the upper compartment 150 and the lower compartment 160. The bottom frangible seal 109 is designed and configured to rupture when a predetermined amount of force is applied thereto as described in greater detail below. The intermediate side seal 108 may be a permanent seal designed and configured not to rupture when force applied to the flexible pouch 10 ruptures the bottom frangible seal 109. The bottom frangible seal 109 may have an arcuate shape and provide a funnel shape from the upper compartment 150 to the lower compartment 160. In this manner, a product contained within the upper compartment 150 may fully drain or flow from the upper compartment 150 into the lower compartment 160. Also, the bottom frangible seal may be spaced apart from the bottom seal 122 of the flexible pouch 10 such that sufficient space or volume is provided for a product contained within the upper

compartment 150 to flow into the lower compartment 160. For example, and without limitation, the bottom frangible seal 109 may be spaced apart from the bottom seal 122 between about 25% to about 50% of the overall height (Y direction) of the flexible pouch 10.

[0044] In embodiments, an aperture 125 extends through the top seal 124. The position of the aperture 125 along the top seal 124 is off-center along the width (X direction) of the flexible pouch 10. The off-center position of the aperture 125 along the width (X direction) of the top seal 124 is configured for the flexible pouch 10 to rotate from a stand-up position as depicted in FIG. 2 to a tilt position as depicted in FIG. 8 when the flexible pouch 10 is hung from an object 15 such as a rod, pin, nail, etc., extending through the aperture 125. That is, hanging the flexible pouch 10 with the object 15 extending through the aperture 125 results in the flexible pouch 10 rotating in a tilt position such that the opening 140 rotates in a downwardly direction (-Y direction). In embodiments, the opening 140 rotates in a downwardly direction between about 15 degrees to about 75 degrees. In other embodiments, the opening 140 rotates in a downwardly direction between about 30 degrees to about 60 degrees. Rotation of the flexible pouch 10 in a downwardly direction may prevent objects 19 from falling within the opening 140 as described in greater detail below.

[0045] In embodiments, a spout fitment 142 is positioned within the opening 140. The spout fitment 142 may have a flange 141, threads 143 and a base portion 144 that is sealed to an opening edge 104a of the front panel 100 and an opening edge 114a of the back panel 110 with a seal 128. A cap 145 can be attached to the spout fitment 142 and removed once the bottom frangible seal 109 has been ruptured and the first product has come into contact with the second product. In embodiments the cap 145 has threads (not shown) that engage the threads 143 of the spout fitment 142 for securement of the cap 145 to the spout fitment 142. The spout fitment 142 with the cap 145 allows for storage of the flexible pouch 10 and any products that may be contained within the upper compartment 150 and the lower compartment 160.

[0046] The flexible pouch 10 may be formed and filled by attaching the front panel 100 to the back panel 110 with the bottom seal 122 and side seals 126a, 126b using a flexible pouch manufacturing machine (not shown). The intermediate side seal 108 and bottom frangible seal 109 may be formed such that the upper compartment 150, lower compartment 160 and vertical passage 164 are provided. The upper compartment 150 may be filled with a desired quantity of a first product, for example and without limitation a liquid or a solid, at a first filling station on the flexible pouch manufacturing machine. The top seal 124 may be formed across an upper portion of the flexible pouch 10 such that the first product is sealed within the upper compartment 150. The flexible pouch may be moved to a second filling station where a diving tube (not shown) is inserted into the vertical passage 164 and/or lower compartment 160 through the spout fitment 142. The lower compartment 160 may be filled with a desired amount of a second product, for example and without limitation a liquid or a solid, through the diving tube and the cap 145 may be attached to the spout fitment 142 to seal the second product within the lower compartment 160.

[0047] Referring now to FIG. 8, in use the flexible pouch 10 may include a first product contained within the upper compartment 150 and a second product contained in the lower compartment 160. The first product may be a solid such as, without limitation, yeast, and the second product may be a liquid such as, without limitation, water. The bottom frangible seal 109 is ruptured by applying a compressive force on the upper compartment 150. For example and without limitation, grasping and rolling the upper compartment 150 from the top seal 124 towards the bottom frangible seal 109 may create an internal pressure within the upper compartment 150 that exerts a force on the bottom frangible seal 109. Upon reaching a predefined force that is greater than a sealing force provided by the bottom frangible seal 109, the bottom frangible seal 109 ruptures a fluid passageway from the upper compartment 150 to the lower compartment 160 is created. Once the fluid passageway from the upper compartment

150 to the lower compartment 160 is created, the first product contained within the upper compartment 150 flows from the upper compartment 150 into the lower compartment 160 as depicted by arrow 16 and comes into contact and/or mixes with the second product and a third product is produced. The third product, e.g., a gas such as and without limitation carbon dioxide, exits the flexible pouch 10 by flowing up through the vertical passage 164 as depicted by arrow 17 and out through the opening 140 as depicted by arrow 18. The third product may attract insects such as, and without limitation, mosquitoes to the flexible pouch 10. The flexible pouch 10 can be hung (suspended) with the object 15 extending through the aperture 125 and the opening 140 rotates downwardly as described above. Upon rotating to a downward position, objects such rain, leaves, etc. are prevented from falling within the opening 140, thereby protecting the contents within the flexible pouch 10.

[0048] Referring now to FIGS. 9-15, another embodiment of a two-compartment flexible pouch is shown generally at reference numeral 20. The flexible pouch 20 includes a front panel 200 and a back panel 210. The front panel 200 may have a bottom edge portion 202, a top edge portion 204 and a pair of side edge portions 206 (FIG. 10). The back panel 210 may have a bottom edge portion 212, a top edge portion 214 and a pair of side edge portions 216 (FIG. 13). The front panel 200 may be attached to the back panel 210 with a bottom seal 222, a top seal 224 and a pair of side seals 226a, 226b. In embodiments, a gusset 230 (FIG. 15) can be positioned between the bottom edge portion 202 of the front panel 200 and the bottom edge portion 212 of the back panel 210 such that a stable base for the flexible pouch 20 is provided. That is, the gusset 230 may be attached to the bottom edge portions 202, 212 with the bottom seal 222 such that the flexible pouch 20 can stand or remain upright as depicted in FIGS. 9, 12, and 14.

[0049] In embodiments, the bottom seal 222, top seal 224 and pair of side seals 226a, 226b may be formed from a seal, e.g., a heat seal, that joins the bottom edge portions 202, 212 together, the top edge portions 204, 214 together and the side edge portions 206, 216 together.

In other embodiments, one or more of the bottom seal 222, top seal 224 and pair of side seals 226a, 226b may be formed from a fold line created by folding a single panel to form the front panel 200 and the back panel 210.

[0050] The flexible pouch 20 may include an upper compartment 250 formed between the front panel 200, the back panel 210, one of the pair of side seals 226a, an intermediate side seal 208, and a bottom frangible seal 209. The bottom frangible seal 209 may extend from and between the intermediate side seal 208 to the side seal 226a. An upper compartment top seal 252 may extend across an upper portion of the upper compartment 250. The flexible pouch 20 also includes a lower compartment 260 formed beneath (-Y direction) the upper compartment 250 between the front panel 200 and the back panel 210. The flexible pouch 20 may also include a vertical passage 264 extending between the intermediate side seal 108 and another of the pair of side seals 226b from the lower compartment 260 to an opening 240. A vertical passage top seal 266 may extend across an upper portion of the vertical passage 264. The vertical passage top seal 266 may be positioned above (+Y direction) the upper compartment top seal 252 as depicted in FIGS 9, 10, and 13. A vertical seal 226 may extend from the upper compartment top seal 252 to the vertical passage top seal 266. Rupture of the bottom frangible seal 209 provides a fluid passageway between the upper compartment 250 and the lower compartment 260. The bottom frangible seal 209 is designed and configured to rupture when a predetermined amount of force is applied thereto as described in greater detail below. The intermediate side seal 208 may be a permanent seal designed and configured not to rupture when force applied to the flexible pouch 20 ruptures the bottom frangible seal 209. The bottom frangible seal 209 may have an arcuate shape and provide a funnel shape from the upper compartment 250 to the lower compartment 260. In this manner, a product contained within the upper compartment 250 may fully drain or flow from the upper compartment 250 into the lower compartment 260. Also, the bottom frangible seal 209 may be spaced apart from the bottom seal 222 of the flexible pouch 20 such

that sufficient space or volume is provided for a product contained within the upper compartment 250 to flow into the lower compartment 260. For example, and without limitation, the bottom frangible seal 209 may be spaced apart from the bottom seal 222 between about 25% to about 50% of the overall height (Y direction) of the flexible pouch 20.

[0051] In embodiments, an aperture 225 extends through the top seal 224. The position of the aperture 225 along the top seal 224 is off-center along the width (X direction) of the flexible pouch 20. The off-center position of the aperture 225 along the width of the top seal 224 is configured for the flexible pouch 20 to rotate from a stand-up position as depicted in FIG. 10 to a tilt position as depicted in FIG. 16 when the flexible pouch 20 is hung from an object 25 such as a rod, pin, nail, etc., extending through the aperture 225. That is, hanging the flexible pouch 20 with the object 25 extending through the aperture 225 results in the flexible pouch 20 rotating in a tilt position such that the opening 240 rotates in a downwardly direction (-Y direction). In embodiments, the opening 240 rotates in a downwardly direction between about 15 degrees to about 75 degrees. In other embodiments, the opening 240 rotates in a downwardly direction between about 30 degrees to about 60 degrees. Rotation of the flexible pouch 20 in a downwardly direction may prevent objects 19 from falling within the opening 240 as described in greater detail below.

[0052] In embodiments, the opening 240 includes the vertical passage top seal 266 and a tear-away notch 268 within the side seal 226b. The tear-away notch 268 affords for the vertical passage top seal 266 to be at least partially removed from the flexible pouch 20 such that a fluid passageway from the vertical passage 264 to an exterior of the flexible pouch 20 is provided. A reflective tape 270 may be attached to an inner surface of the vertical passage 264. In embodiments, the reflective tape 270 may attract insects to the opening 240. The vertical passage top seal 266 may be removed once the bottom frangible seal 209 has been ruptured and the first product has come into contact with the second product. The vertical passage top seal

266 allows for storage of the flexible pouch 20 and any products that may be contained within the upper compartment 250 and the lower compartment 260.

[0053] Referring now to FIG. 16, in use the flexible pouch 20 may include a first product contained within the upper compartment 250 and a second product contained in the lower compartment 260. The first product may include a solid such as, without limitation, yeast, and the second product may include a liquid such as, without limitation, water. The bottom frangible seal 209 is ruptured by applying a compressive force on the upper compartment 150. For example and without limitation, grasping and rolling the upper compartment 250 from the top seal 224 towards the bottom frangible seal 209 may create an internal pressure within the upper compartment 250 that exerts a force on the bottom frangible seal 209. Upon reaching a predefined force that is greater than a sealing force provided by the bottom frangible seal 209, the bottom frangible seal 209 ruptures a fluid passageway from the upper compartment 250 to the lower compartment 260 is created. Once the fluid passageway from the upper compartment 250 to the lower compartment 260 is created, the first product contained within the upper compartment 250 flows from the upper compartment 250 into the lower compartment 260 as depicted by arrow 16 and comes into contact and/or mixes with the second product and a third product is produced. A user may grasp the side seal 226b proximate the tear-away notch 268, grasp the upper seal proximate the tear-away notch 268 and upon pulling on the vertical passage top seal 266 in a direction away from the side seal 226b (-X direction) remove at least a portion of the vertical passage top seal 266 as depicted in FIG. 16. The third product, e.g., a gas such as without limitation carbon dioxide, exits the flexible pouch 20 by flowing up through the vertical passage 264 and out through the opening 240 after the vertical passage top seal 266 has been at least partially removed from the flexible pouch 20. The third product may attract insects such as, and without limitation, mosquitoes to the flexible pouch 20. The flexible pouch 20 can be hung (suspended) with the object 15 extending through the aperture 225 and the opening 240 rotates

downwardly as described above. The reflective tape 270 may be visible from outside the flexible pouch 20 and may assist in attracting insects such as, and without limitation, mosquitoes to the flexible pouch 20. Upon rotating to a downward position, the opening 240 is at least partially protected from objects such as rain, leaves, etc. falling and entering the opening 240, thereby protecting the contents within the flexible pouch 20.

[0054] Based on the foregoing, it should now be understood that the flexible pouches and methods described herein can be used to for two-component products that may be brought into contact with each other to produce a third product. The use of the flexible pouches provides an upper compartment for containing a first product and a lower compartment for containing a second product. A frangible seal is positioned between the upper compartment and the lower compartment and when the frangible seal is broken, e.g., ruptured, a fluid passage way is formed between the upper compartment and the lower compartment. The fluid passageway allows the first product to flow from the upper compartment to the lower compartment and come into contact with the second product. Contact of the first product with the second product may generate or result in the creation of a desired third product. The third product may be allowed to escape of exit the flexible pouch through an opening by flowing from the lower compartment through a vertical passage extending from the lower compartment to the opening.

[0055]

EXAMPLES

Example 1

	volume(ml)	density(g/ml)	weight(g)	weight percent
sucrose			30	22.2926099
water	100	1.0028	100.28	74.51676402
citronella oil	0.15	0.897	0.13455	0.099982355
licorice extract	0.15	1.0613	0.159195	0.118295734
yeast			3	2.22926099
thyme			0.25	0.185771749

rosemary			0.25	0.185771749
cinnamon			0.25	0.185771749
wheat flour			0.125	0.092885875
sodium bicarbonate			0.125	0.092885875
		total weight	134.573745	100

[0056] In the following examples the active ingredients including thyme, rosemary, cinnamon, and citronella oil may vary by +/- 10% while the inert ingredients including water +/- 10%, sugar+/- 5%, yeast+/- 5%, wheat flour +/- 10%, sodium bicarbonate, +/- 10% and licorice extract+/- 10% may vary as indicated.

[0057] In a first example, the liquid ingredients of the mosquito control product may include 30 grams of sucrose, 100 milliliters of distilled water, .15 milliliters of citronella oil, and .15 milliliters of licorice extract. The dry ingredients may include 3 grams of yeast, .25 grams of thyme, .25 grams of rosemary, .25 grams of cinnamon, .125 grams of wheat flour, and .125 grams of sodium bicarbonate. The sucrose and yeast as described above are carriers to form carbon dioxide in a fermentation reaction. The licorice extract may act as a stabilizer and preservative. The wheat flour may be utilized as a supplemental food source for the yeast. Sodium bicarbonate may act as a buffer to a change in pH of the ingredients.

[0058] It should be realized that various types of yeast may be utilized. In one aspect the yeast may include both live and dead yeast. Additionally, the yeast may include specialized strains such as wine yeast or baker's yeast which may be more tolerant to higher levels of alcohol produced by the fermentation reaction.

[0059] Referring to Figures 17 and 18, there are shown plots of the CO_2 production in parts per million as a function of time both for an observational period and as displayed in minutes for the formulation of Example 1. As can be seen in the plots, the CO_2 production ramps up quickly to reach a peak amount of 3,317 parts per million after half an hour of being activated by combining the liquid and dry ingredients. The formulation of Example 1 ramps up quickly and

then begins to fall following 600 minutes of activation. The CO_2 may transport the active ingredients to contact or expose the mosquito and affect its desire for a blood meal.

Example 2

	volume(ml)	density(g/ml)	weight(g)	weight percent
sucrose			35	0.18218176
water	150	1.0028	150.42	0.782965152
citronella oil	0.1	0.897	0.0897	0.000466906
licorice extract	0.1	1.0613	0.10613	0.000552427
yeast			5	0.026025966
thyme			0.375	0.001951947
rosemary			0.375	0.001951947
cinnamon			0.375	0.001951947
wheat flour			0.1875	0.000975974
sodium bicarbonate			0.1875	0.000975974
		total weight	192.11583	1

[0060] The formulation may include inert ingredients including 150 milliliters of distilled water, 35 grams of sucrose, 5 grams of yeast, .1875 grams of wheat flour, .1875 grams of sodium bicarbonate, and .1 ml of licorice extract. The active ingredients may include 0.375 grams of thyme, 0.375 grams of rosemary, 0.375 grams of cinnamon, and 0.1 ml citronella oil. As described above, the liquid and dry ingredients may be combined to activate the mosquito control product such that a fermentation reaction between the yeast and sugar acts to produce carbon dioxide as a carrier for the active ingredients. Referring to Figure 19, there is shown a plot of the CO_2 produced as a function of time in hours. As can be seen in the plot, the CO_2 production reaches a peak of around 10 hours with 3000 parts per million being produced. The CO_2 production begins to ramp down following the peak and levels out after approximately 160 hours following activation by combining the dry and liquid ingredients.

Example 3

	volume(ml)	density(g/ml)	weight(g)	weight percent
sucrose			175	25.39422739

water	500	1.0028	501.4	72.75808921
citronella oil	0.12	0.897	0.10764	0.015619626
licorice extract	0.12	1.0613	0.127356	0.018480613
yeast			9	1.305988837
thyme			0.874	0.126826027
rosemary			0.874	0.126826027
cinnamon			0.874	0.126826027
wheat flour			0.438	0.063558123
sodium bicarbonate			0.438	0.063558123
		total weight	689.132996	100

[0061] The formulation may include inert ingredients including 500 milliliters of distilled water, 175 grams of sucrose, 9 grams of yeast including 4 grams of dead yeast and 5 grams of live yeast, .438 grams of wheat flour, .438 grams of sodium bicarbonate, and .12 ml of licorice extract. The active ingredients may include 0.874 grams of thyme, 0.874 grams of rosemary, 0.874 grams of cinnamon, and 0.12 ml citronella oil. As described above, the liquid and dry ingredients may be combined to activate the mosquito control product such that a fermentation reaction between the yeast and sugar acts to produce carbon dioxide as a carrier for the active ingredients. Referring to Figure 20 there is shown a plot of the CO_2 produced as a function of time in hours. As can be seen in the plot, the CO_2 production reaches a peak of around 32 hours with 3798 parts per million being produced. The CO_2 production begins to ramp down following the peak and levels out after approximately 300 hours following activation by combining the dry and liquid ingredients.

[0062] Experiments were performed by exposing yellow fever mosquitos, *Aedes aegypti*, to formulations of the mosquito control product as described in Examples 1 and 2. The test organisms were 5 to 7 day old *Aedes aegypti* deprived of food (sugar water) for 24 hours to ensure biting activity. The testing included *in vitro* laboratory study of the mosquitos after exposure to the product for various time periods.

[0063] Bioassays were performed in a fluorescent lighted and air conditioned room using six chambered Plexiglas K & D modules stocked with five mosquitos per chamber. The modules were placed on top of a water reservoir containing surface wells filled with artificial blood and covered with collagen membranes, as depicted in Figures 4-7. The blood was heated to 38°C using warm water pumped by a temperature controlled immersion circulator in a water bath. The six modules contained shallow blood wells etched into the surfaces.

[0064] Two trials were completed in which mosquitos were exposed to the activated product of Example 2 following activation of the dry and liquid ingredients for 6 hours. A second trial was completed by exposing mosquitos to 2 hours of the product of Example 2 after being activated for 48 hours. Nontreated mosquitos were used as a control in both trials. Eighteen replications of each of the two treatments were randomly assigned to three pairs of modules. Sliding doors located at the base of the modules were open to expose mosquitos to the membrane covered blood wells for 90-second bite counts.

[0065] The biting counts between control mosquitos and mosquitos that were exposed to the formulation of Example 2 were utilized to generate experimental data presented below in table 1.

Table 1

Observation	(Example 2)	CONTROL
1.	2	4
2.	2	2
3.	1	1
4.	2	1
5.	1	4
6.	1	1
7.	2	3
8.	2	4
9.	4	3
10.	1	4

11.	3	3
12.	2	3
13.	1	3
14.	3	2
15.	0	4
16.	1	1
17.	0	2
18.	1	5

[0066] A nonpaired t-test was performed on the data. The data was then analyzed using a pooled variance of the two data sets including the control and experimental pools. The pooled variance was calculated to be 1.335 and a corresponding standard error of 0.385. The separation in mean biting pressure between the two groups showing higher biting counts from the control mosquitos compared to those exposed to the product of Example 2 provides a t-statistic equal to 3.04 where p is equal to 0.0047. As can be seen, the reduction in biting pressure in the group exposed to the mosquito control product of Example 2 compared to the control group is highly significant at a 99.53 level. In other words, the risk of an error due to the sampling design is only $p = 0.0047$.

[0067] The results of the mosquito control experiments indicate that exposure of the mosquitos to the product of Example 2 significantly reduced the biting pressure in comparison to the control mosquitos which were not exposed. The experimental results demonstrate that the product including the active ingredients affects the mosquitos exposed to the active ingredients such that they no longer seek a blood meal but would alternatively seek to find an alternative meal such as sugar or nectar. The controlled experiment utilized confined blood hungry female mosquitos which did not seek a blood meal and confirms the efficacy of reducing a mosquito's desire to seek a blood meal when exposed to the compositions as described in Examples 1 and 2.

The formulations as described herein provide a safe, organic, and highly effective product to prevent biting mosquitos from seeking a blood meal.

[0068] Additional Testing Data

[0069] The formulas of examples 2 and 3 were packaged in the two component pouches as described above. The components were combined or activated as described above and positioned as described below.

[0070] Sarasota, Florida Cricket Field

[0071] Prior to application of the formulas 2 and 3 the Cricket Field in Sarasota was difficult for spectators and players alike due to biting mosquitoes. Subsequent to placing pouches of the formulas of examples 2 and 3 every 30,000 square feet about the perimeter of the field the reported number of bites fell to zero. These tests began in October 2016 and continue with zero reported mosquito bites.

[0072] Tuguegaro City, Luzon, Philippines

[0073] A local school in the Philippines positioned the two component pouches including the formula of example 3 every 30,000 square feet around the periphery of a school yard utilized by students for recreation. Subsequent to placing pouches of the formulas of example 3 every 30,000 square feet about the perimeter of the yard the reported number of bites fell to zero. The example of formula 3 provides deterrence for 15 days and if not replaced the students experience biting in excess. Tuguegaro is in the Cagayan Valley region of northern Luzon and has been called the mosquito capitol of the World.

[0074] Company Field Documentation in Florida

[0075] A screened area of 300 square feet in central Sarasota, Florida has been used to test the formulas of examples 1-3. Several species of mosquitoes including Aedes aegypti are allowed to enter the screened area. The formulas of examples 1-3 are packaged in the two component pouches and is activated and placed with mosquitoes for 2 hours. Personnel enter the

screen area for 1 minute intervals after 2, 3, and 4 hours. Biting counts are tabulated as shown below. The process is repeated with new mosquitoes entering the screened area but with no treatment or exposure to the formulas of examples 1-3. The biting counts are tabulated as shown below. The Percent deterrence reached 83.6 % when mosquitoes were exposed to the formulas of examples 1-3 for 2 hours prior to personnel entering the screened area at various time periods compared to the control where no exposure to formulas of examples 1-3 was present before personnel entered the screened area.

[0076] This type of experiment has limitations due to variation in species, ambient conditions, and ratios of male to female mosquitoes. However, rigor of the testing is enhanced by the fact that the mosquitoes cannot leave the screened area to find nectar food once their appetite for a blood meal is affected by exposure to the confounding agent. As described above, the formulas of examples 1-3 functions by confusing the female receptors after they are drawn to the product from distance then confounded by gases present in the immediate area of the product. In the natural environment the mosquito can fly away to feed on sugar, whereas in the screened area they cannot vacate to locate other food than blood necessary for good egg development. The 85% deterrence compared to 100% in a natural environment is likely explained by the inability of the female mosquito to exit the immediate location to find a sugar food source.

Time(hr)	Bites Control	Bites Treated with Formula
2	12	2
3	9	1
4	18	3
5	22	4

[0077] P value and statistical significance: The two-tailed P value equals 0.0054 By conventional criteria, this difference is considered to be very statistically significant. Confidence interval: The mean of Group One minus Group Two equals 12.75 95% confidence interval of this difference: From 5.42 to 20.08 Intermediate values used in

calculations: $t = 4.2549$, $df = 6$, standard error of difference = 2.997. In other words, the significance level is 99.9946.

[0078] We claim:

CLAIMS

1. A mosquito control product comprising:

a two part composition including separated wet and dry ingredients, the wet and dry ingredients including active and inert ingredients, wherein when the wet and dry ingredients are combined forming a carrier agent contacting a mosquito with the active ingredients wherein the mosquito is discouraged from seeking a blood meal.

2. The mosquito control product of claim 1 wherein the dry ingredients are selected from the group consisting of: sugar, yeast, thyme, rosemary, cinnamon, wheat flour and sodium bicarbonate.

3. The mosquito control product of claim 1 wherein the wet ingredients are selected from the group consisting of: water, citronella oil, licorice extract.

4. The mosquito control product of claim 1 wherein the inert ingredients are selected from the group consisting of: water, sugar, yeast, wheat flour, sodium bicarbonate, and licorice extract.

5. The mosquito control product of claim 1 wherein the active ingredients are selected from the group consisting of: thyme, rosemary, cinnamon, and citronella oil.

6. The mosquito control product of claim 1 wherein the carrier agent is carbon dioxide and acts as a mosquito attractant.

7. The mosquito control product of claim 4 wherein sugar is present in an amount of from 15 to 30% by weight, water is present in an amount of from 68 to 80 % by weight, yeast is present in an amount of from 1 to 3% by weight, wheat flour is present in an amount of from .05

to 0.1% by weight, sodium bicarbonate is present in an amount of from 05 to 0.1% by weight, and licorice extract is present in an amount of from .05 to .15 % by weight.

8. The mosquito control product of claim 5 wherein thyme is present in an amount of from 0.1 to 0.2 % by weight, rosemary is present in an amount of from 0.1 to 0.2 % by weight, cinnamon is present in an amount of from 0.1 to 0.2 % by weight, and citronella oil is present in an amount of from .01 to .1% by weight.

9. The mosquito control product of claim 1 further including lactic acid acting as a mosquito attractant.

10. A mosquito control product comprising:

a two part composition including separated wet and dry ingredients, the wet and dry ingredients including active ingredients including thyme, rosemary, cinnamon, and citronella oil and inert ingredients including water, sugar, yeast, wheat flour, sodium bicarbonate, and licorice extract, wherein when the wet and dry ingredients are combined forming a carrier agent contacting a mosquito with the active ingredients wherein the mosquito is discouraged from seeking a blood meal.

11. The mosquito control product of claim 10 wherein the dry ingredients are selected from the group consisting of: sugar, yeast, thyme, rosemary, cinnamon, wheat flour and sodium bicarbonate and wherein the wet ingredients are selected from the group consisting of: water, citronella oil, licorice extract.

12. The mosquito control product of claim 10 wherein the carrier agent is carbon dioxide and acts as a mosquito attractant.

13. The mosquito control product of claim 10 wherein sugar is present in an amount of from 15 to 30% by weight, water is present in an amount of from 68 to 80 % by weight, yeast is present in an amount of from 1 to 3% by weight, wheat flour is present in an amount of from .05 to 0.1% by weight, sodium bicarbonate is present in an amount of from 05 to 0.1% by weight, and licorice extract is present in an amount of from .05 to .15 % by weight.

14. The mosquito control product of claim 10 wherein thyme is present in an amount of from 0.1 to 0.2 % by weight, rosemary is present in an amount of from 0.1 to 0.2 % by weight, cinnamon is present in an amount of from 0.1 to 0.2 % by weight, and citronella oil is present in an amount of from .01 to .1% by weight.

15. The mosquito control product of claim 10 further including lactic acid acting as a mosquito attractant.

16. A mosquito control product comprising:

a two part composition including separated wet and dry ingredients including active and inert ingredients, the dry ingredients positioned in an upper compartment of a pouch, the wet ingredients positioned in a lower compartment of the pouch, the upper and lower compartments separated by a frangible seal, wherein when the frangible seal is ruptured the wet and dry ingredients are combined forming a carrier agent exiting the pouch and contacting a mosquito with the active ingredients wherein the mosquito is discouraged from seeking a blood meal.

17. The mosquito control product of claim 16 wherein the dry ingredients are selected from the group consisting of: sugar, yeast, thyme, rosemary, cinnamon, wheat flour and sodium

bicarbonate and wherein the wet ingredients are selected from the group consisting of: water, citronella oil, licorice extract.

18. The mosquito control product of claim 16 wherein the inert ingredients are selected from the group consisting of: water, sugar, yeast, wheat flour, sodium bicarbonate, and licorice extract.

19. The mosquito control product of claim 16 wherein the active ingredients are selected from the group consisting of: thyme, rosemary, cinnamon, and citronella oil.

20. The mosquito control product of claim 16 wherein the carrier agent is carbon dioxide and acts as a mosquito attractant.

21. The mosquito control product of claim 18 wherein sugar is present in an amount of from 15 to 30% by weight, water is present in an amount of from 68 to 80 % by weight, yeast is present in an amount of from 1 to 3% by weight, wheat flour is present in an amount of from .05 to 0.1% by weight, sodium bicarbonate is present in an amount of from 05 to 0.1% by weight, and licorice extract is present in an amount of from .05 to .15 % by weight.

22. The mosquito control product of claim 19 wherein thyme is present in an amount of from 0.1 to 0.2 % by weight, rosemary is present in an amount of from 0.1 to 0.2 % by weight, cinnamon is present in an amount of from 0.1 to 0.2 % by weight, and citronella oil is present in an amount of from .01 to .1% by weight.

23. The mosquito control product of claim 16 further including lactic acid acting as a mosquito attractant.

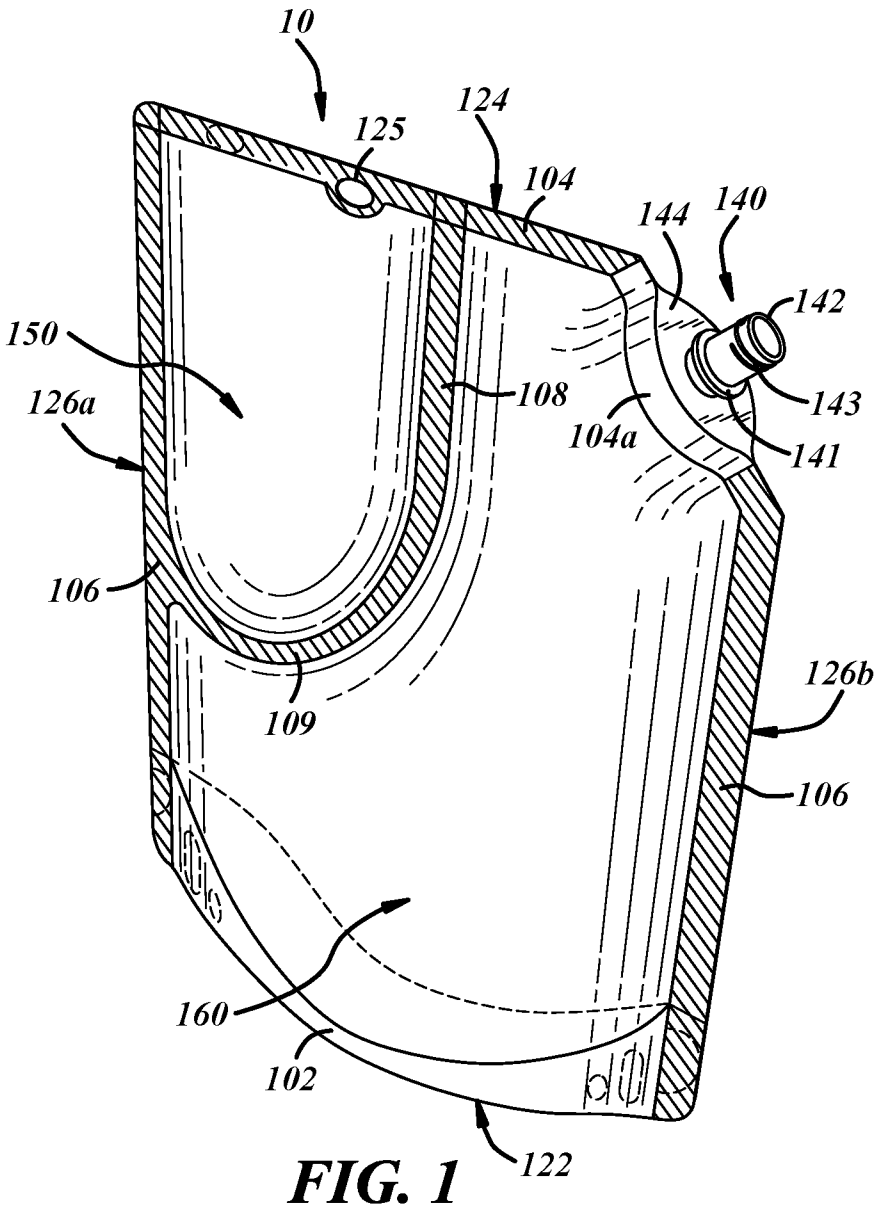
10
125
124
104
144
140
142
150
108
143
126a
104a
141
106
126b
109
106
160
102
122

FIG. 1

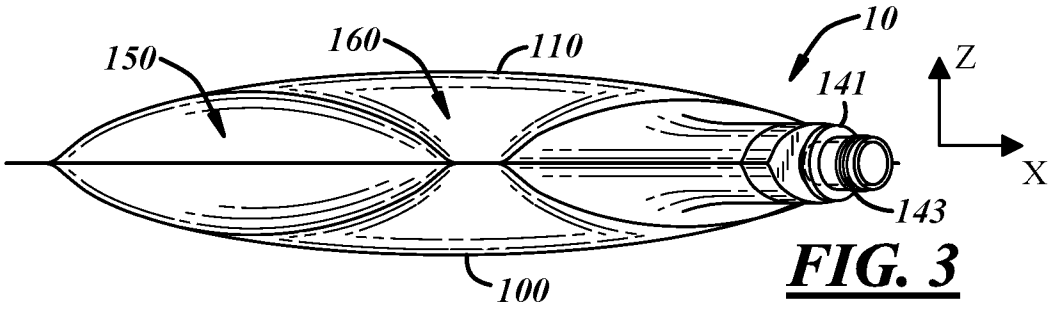

FIG. 3

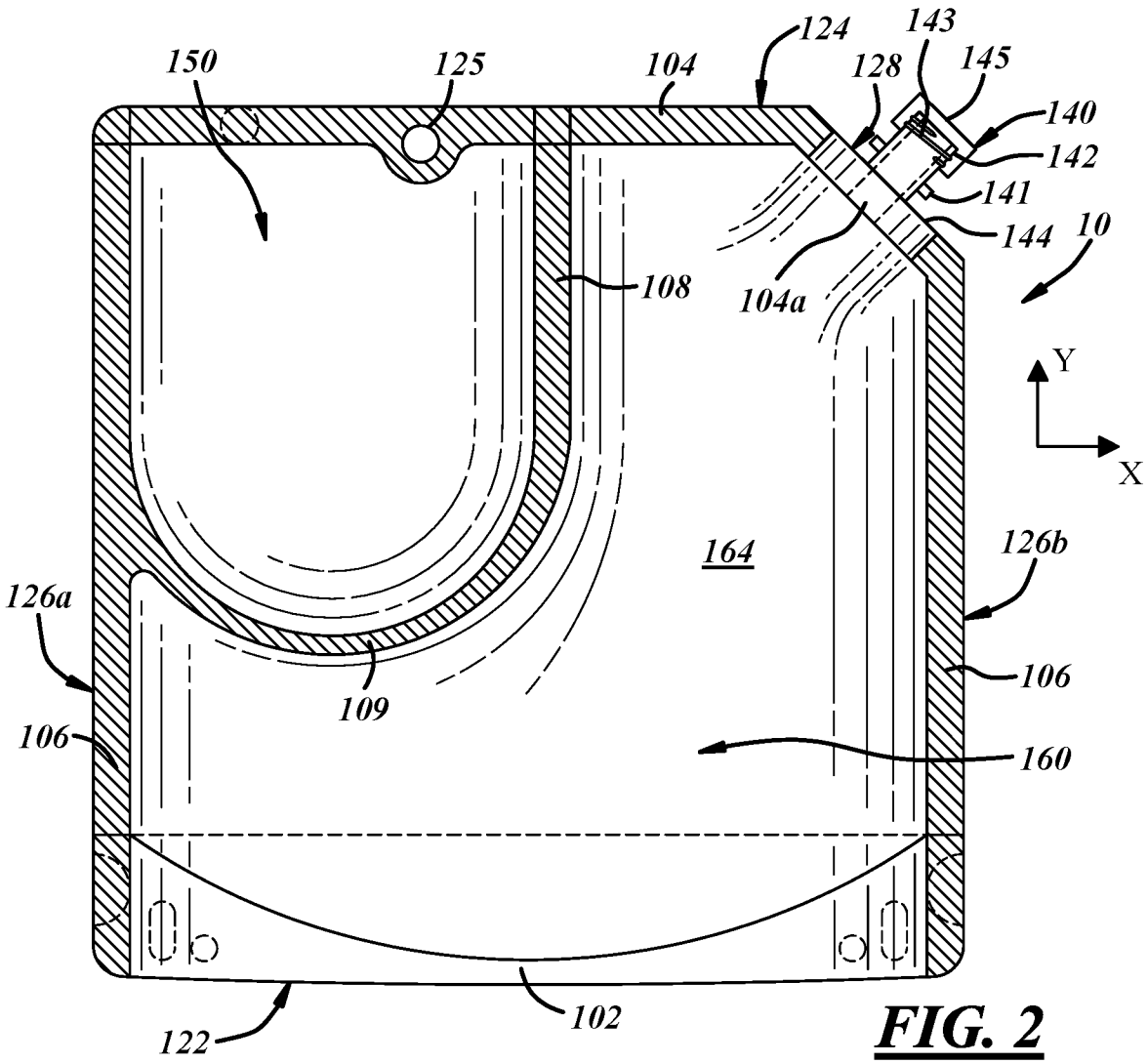

FIG. 2

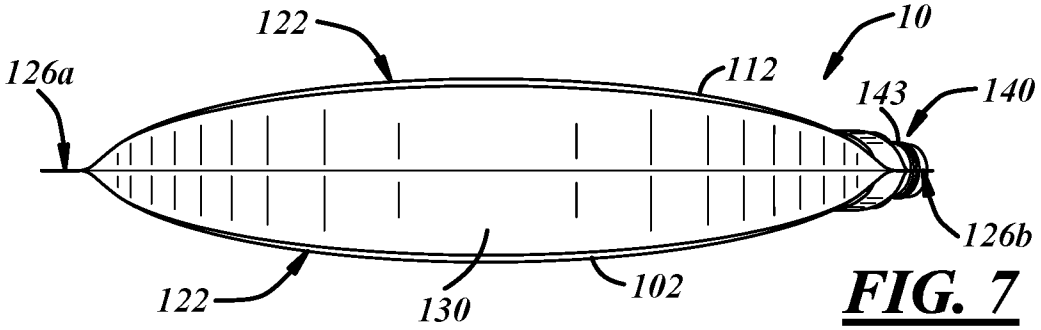

FIG. 7

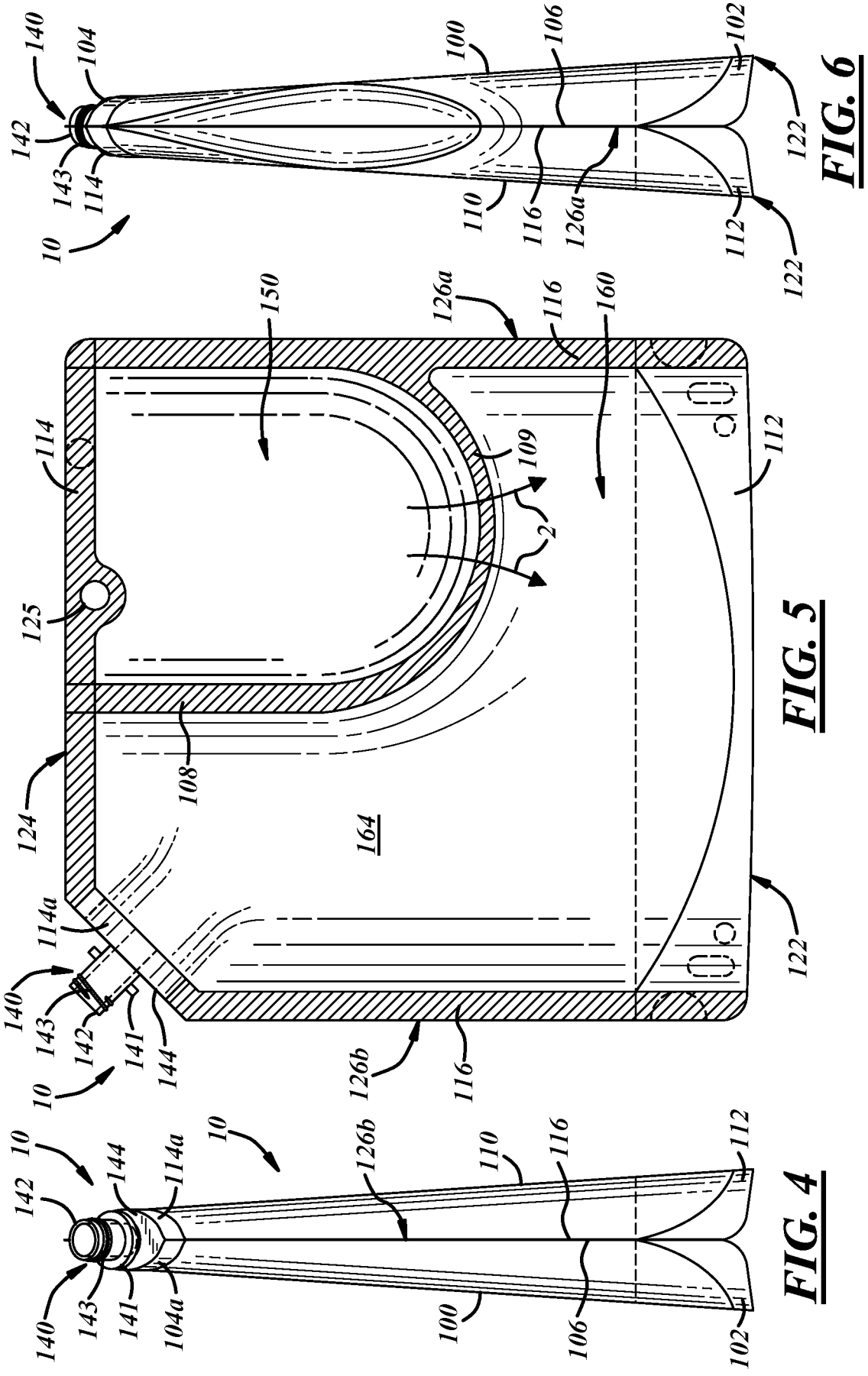
140
104
142
143
114
10
100
106
102
122
110
116
126a
112
122
FIG. 6
150
126a
116
160
114
109
2
112
125
108
124
164
114a
140
143
142
141
144
10
126b
116
122
FIG. 5
10
142
144
114a
10
126b
110
116
112
140
143
141
104a
100
106
102
FIG. 4

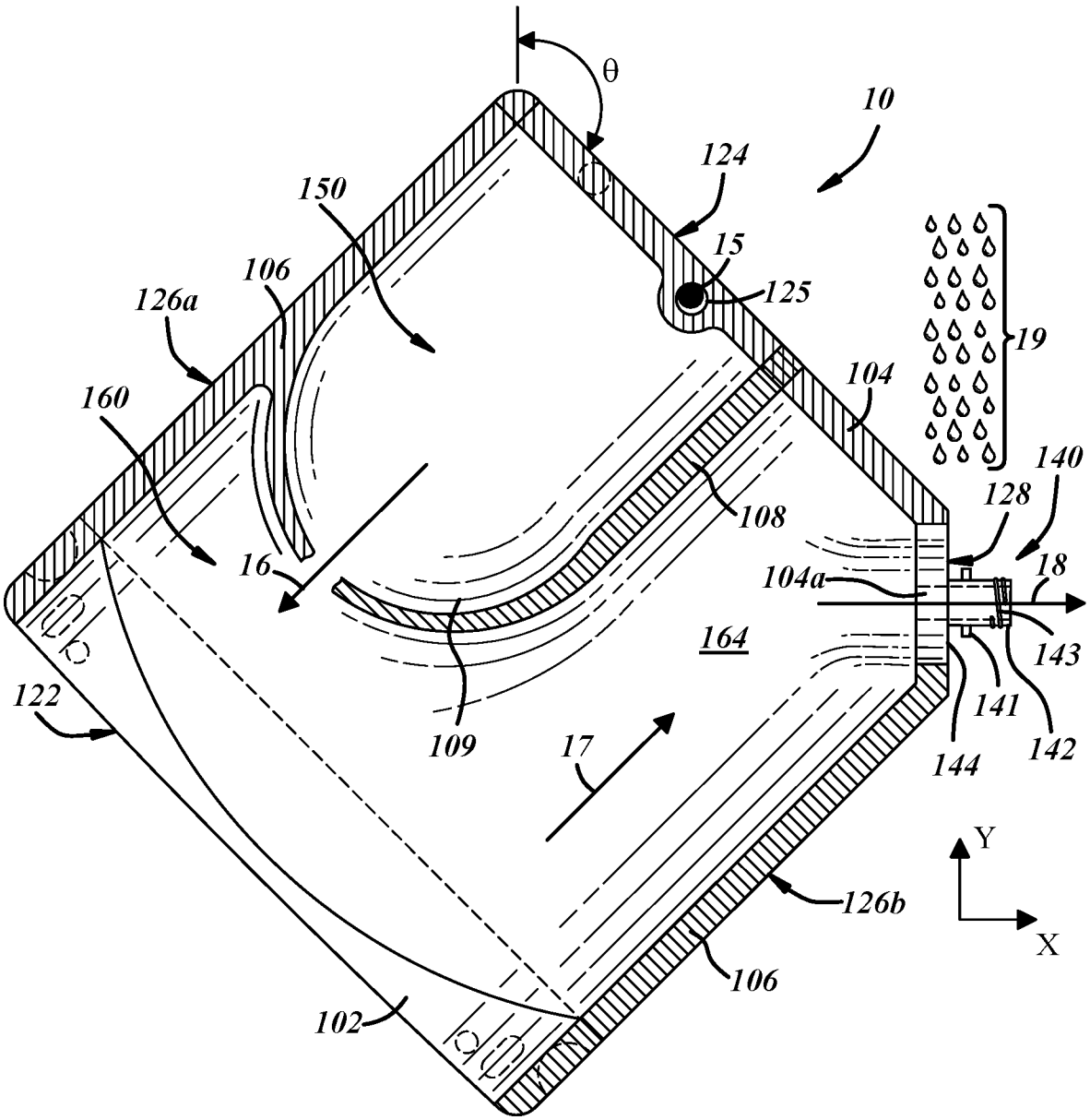
θ
10
124
150
15
106
125
126a
19
160
104
140
108
128
16
18
104a
164
143
122
141
109
17
142
144
Y
126b
X
106
102

FIG. 8

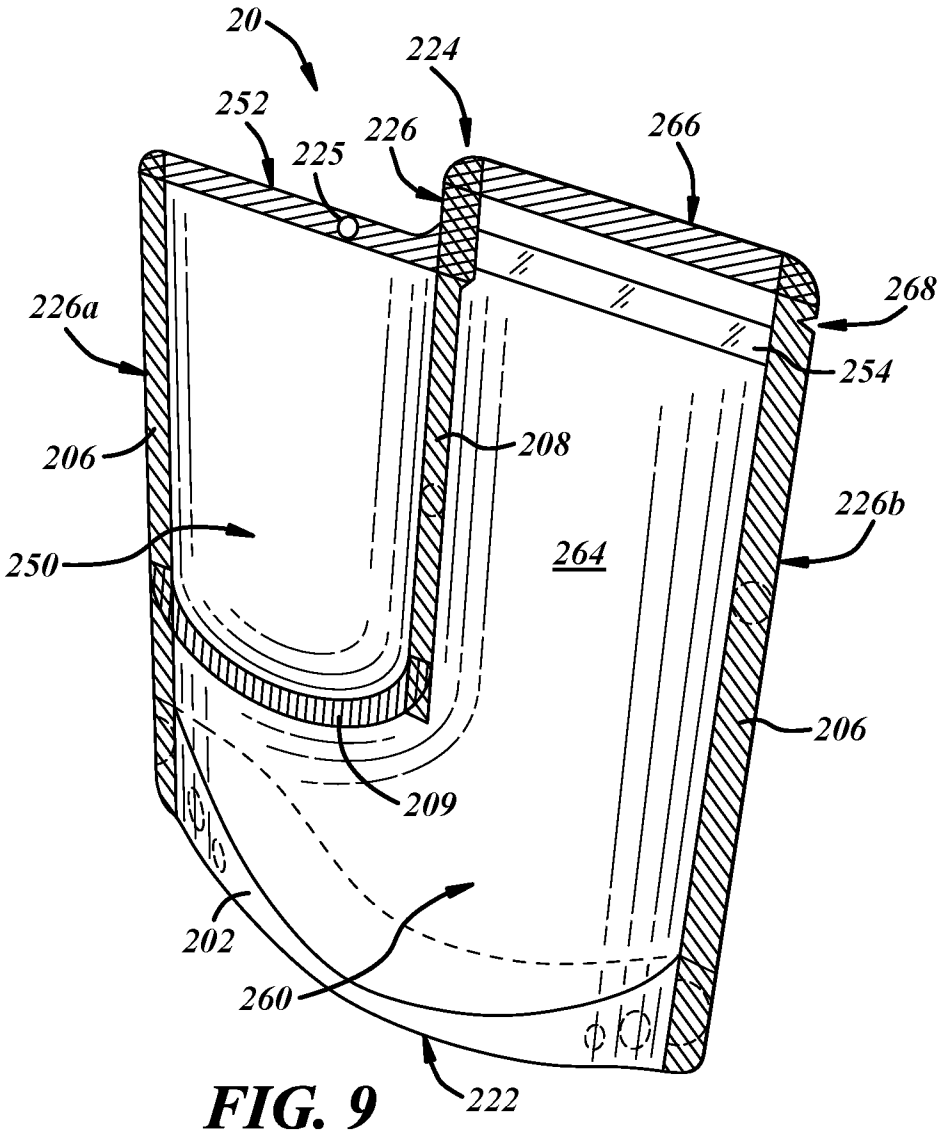
20
224
252
225
226
266
268
226a
254
206
208
226b
250
264
206
209
202
260
222

FIG. 9

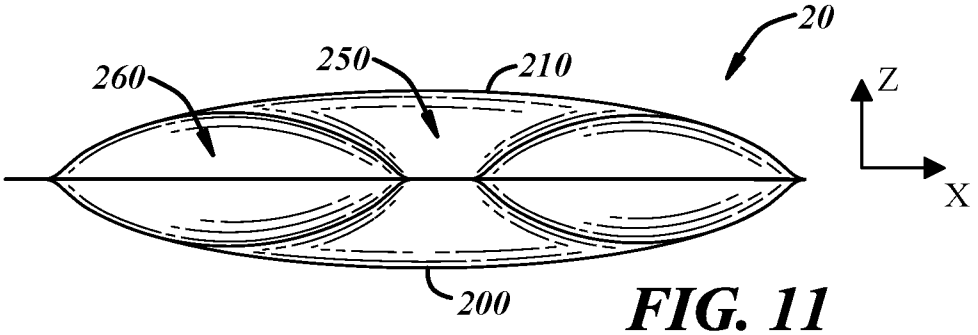
20
260
250
210
Z
X
200

FIG. 11

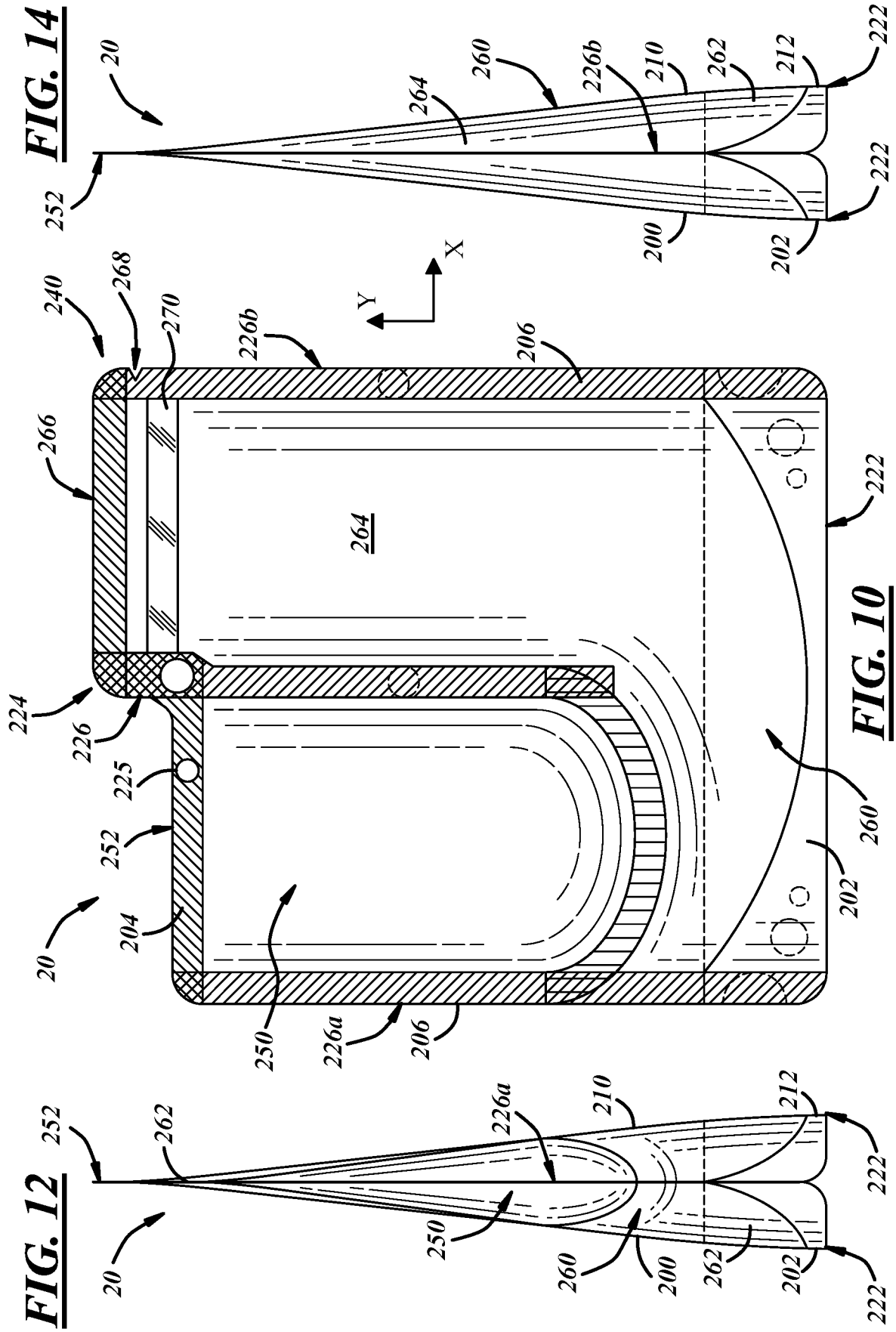

FIG. 14

FIG. 10

FIG. 12

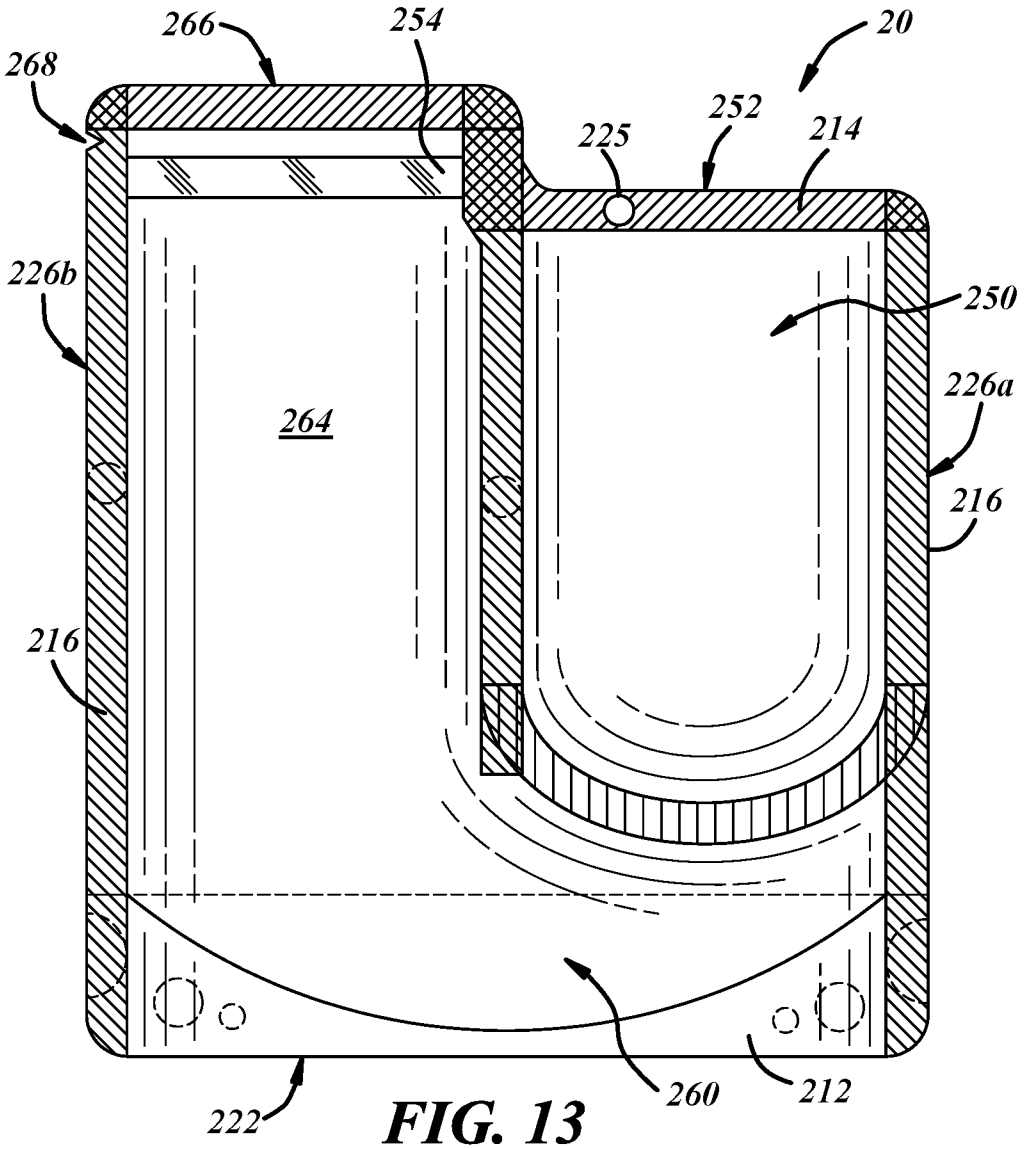
266
254
20
268
252
225
214
226b
250
264
226a
216
216
222
260
212

FIG. 13

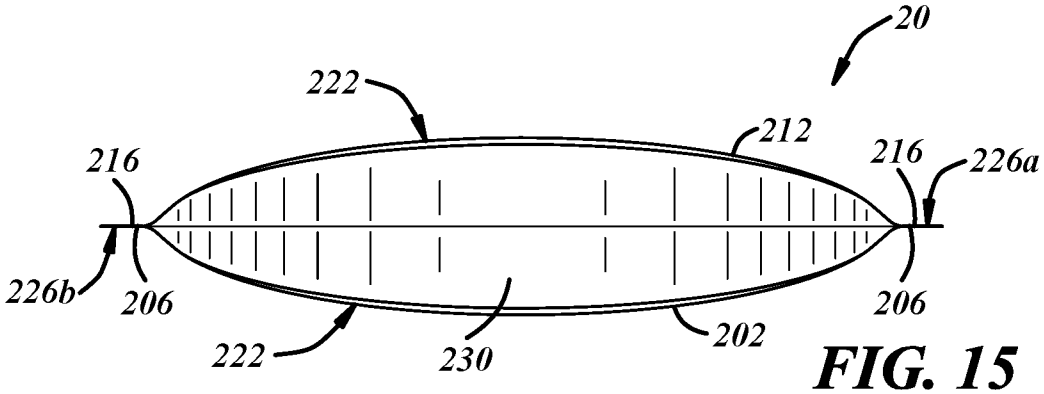
20
222
212
216
216
226a
226b
206
206
222
230
202

FIG. 15

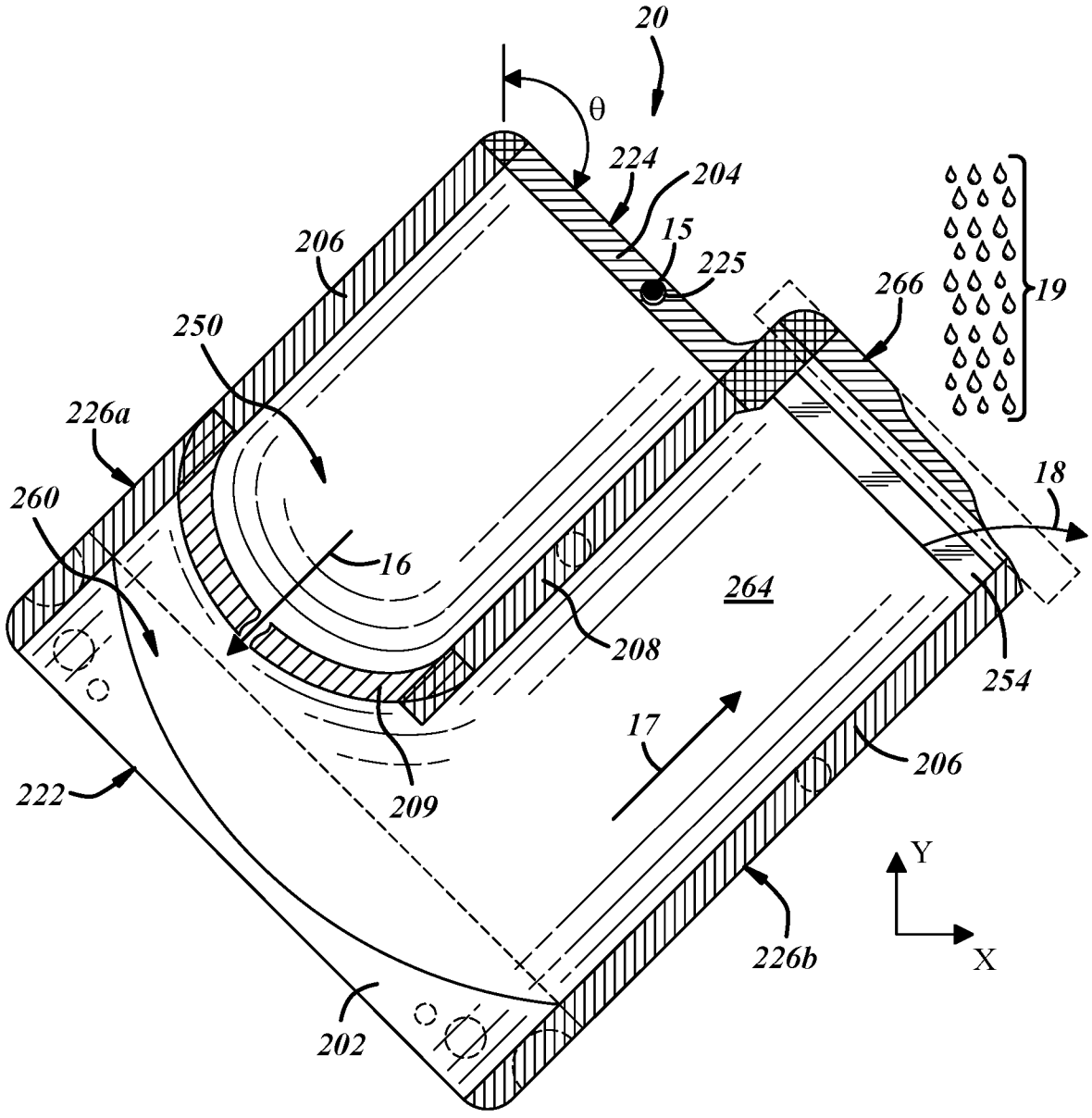
20
θ
224
204
15
225
206
266
19
250
226a
18
260
16
264
208
254
17
206
222
209
Y
X
226b
202

FIG. 16

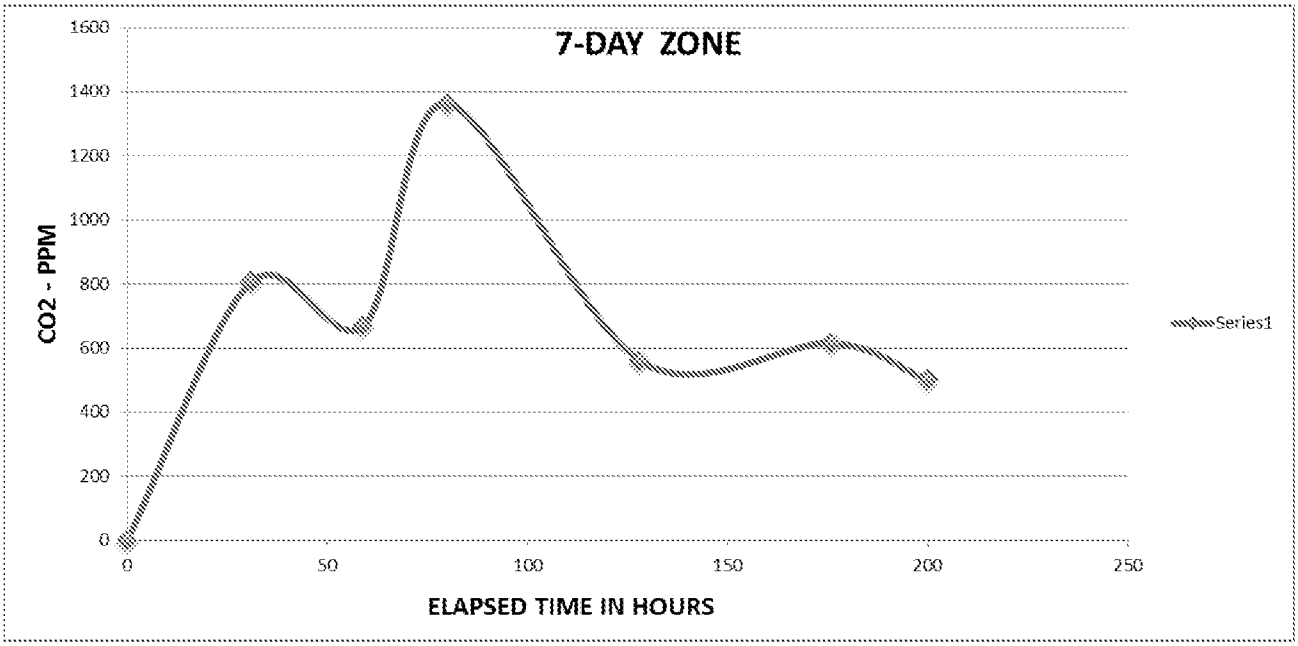
7-DAY ZONE
CO2 - PPM
1600
1400
1200
1000
800
600
400
200
0
0
50
100
150
200
250
ELAPSED TIME IN HOURS
Series1

Figure 17

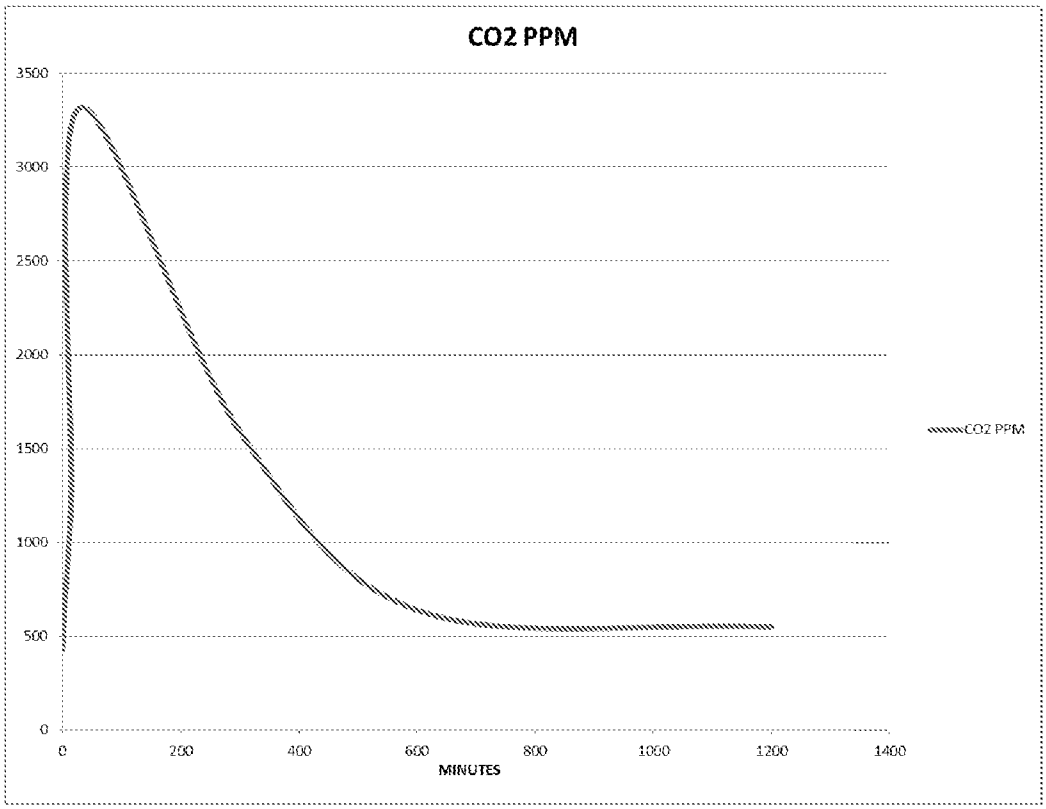
CO2 PPM
3500
3000
2500
2000
1500
1000
500
0
0
200
400
600
800
1000
1200
1400
MINUTES
CO2 PPM

Figure 18

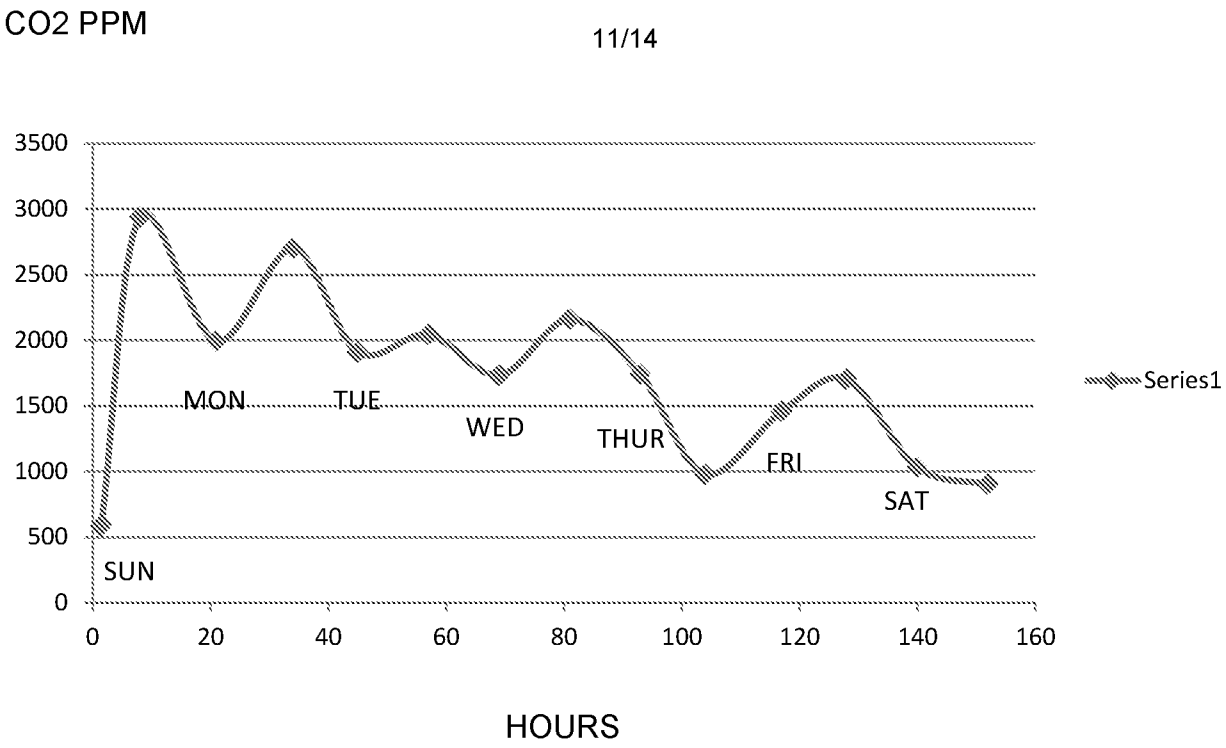
CO2 PPM
3500
3000
2500
2000
1500
1000
500
0
0
20
40
60
80
100
120
140
160
SUN
MON
TUE
WED
THUR
FRI
SAT
HOURS
Series1

Figure 19

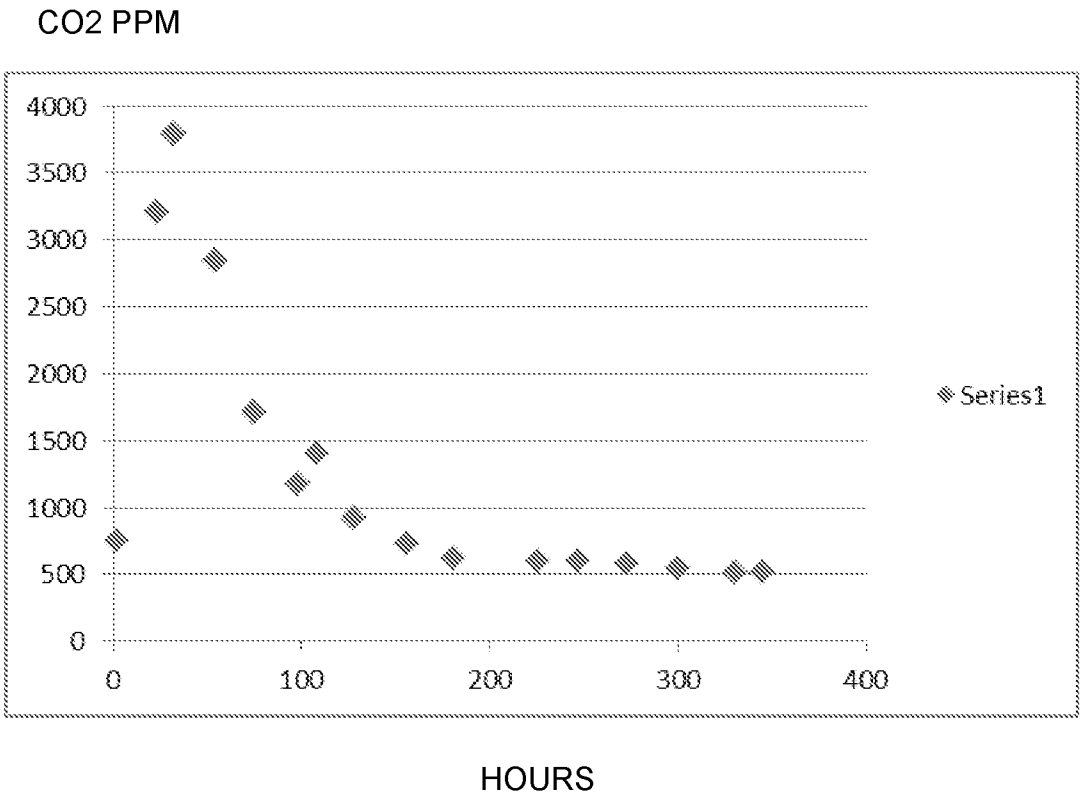
CO2 PPM
4000
3500
3000
2500
2000
1500
1000
500
0
0
100
200
300
400
Series1
HOURS

Figure 20

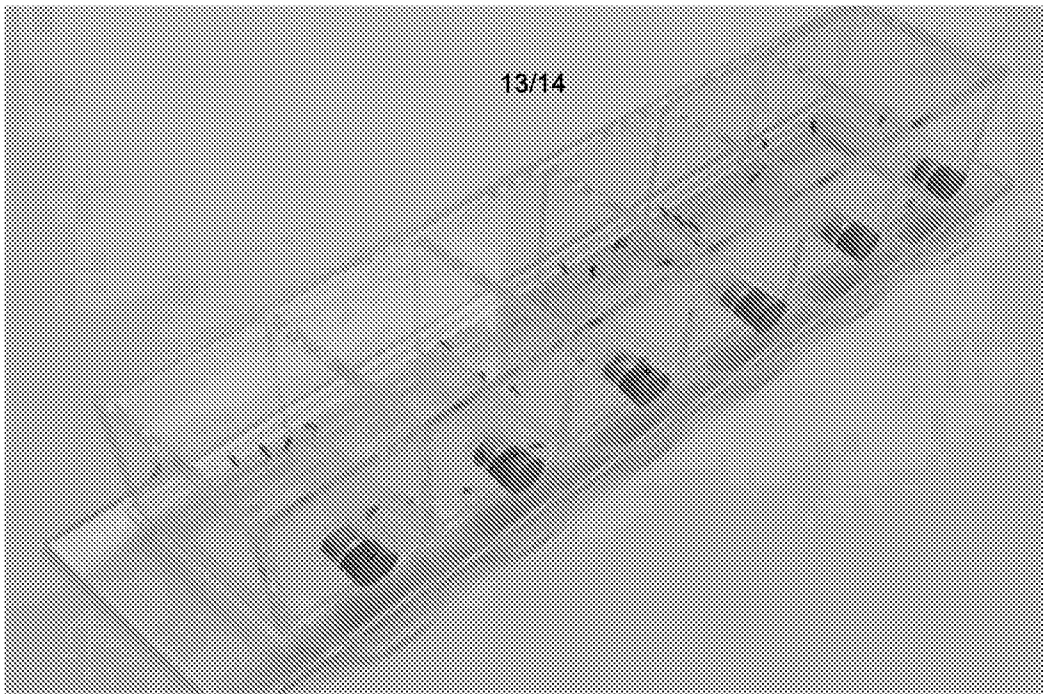

Figure 21

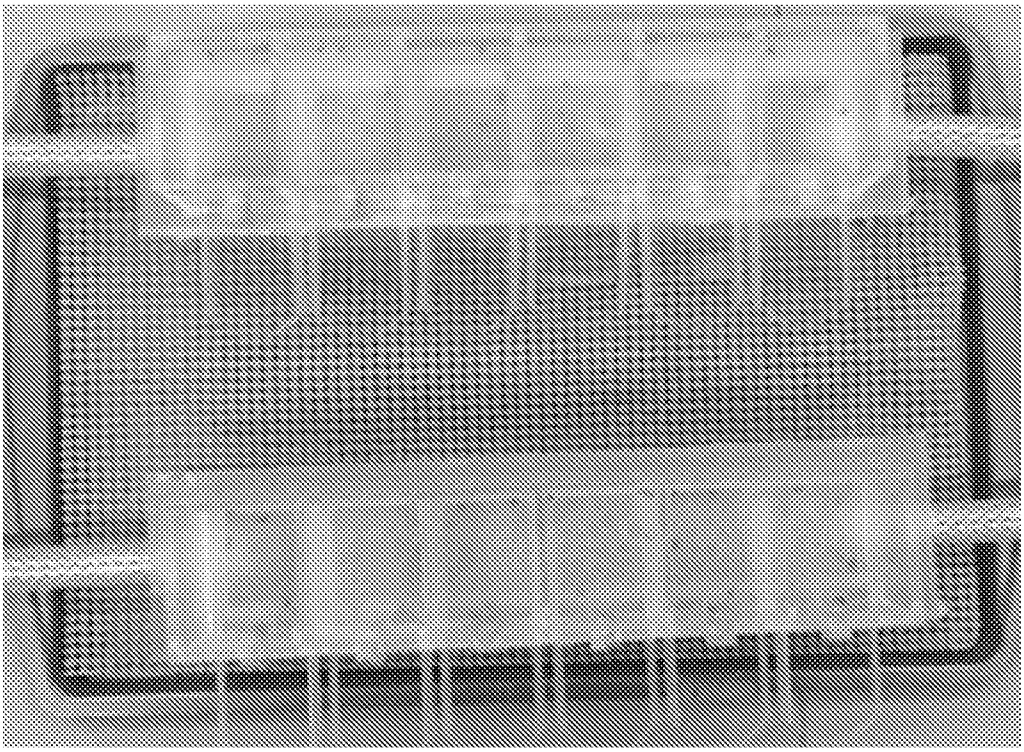

Figure 22

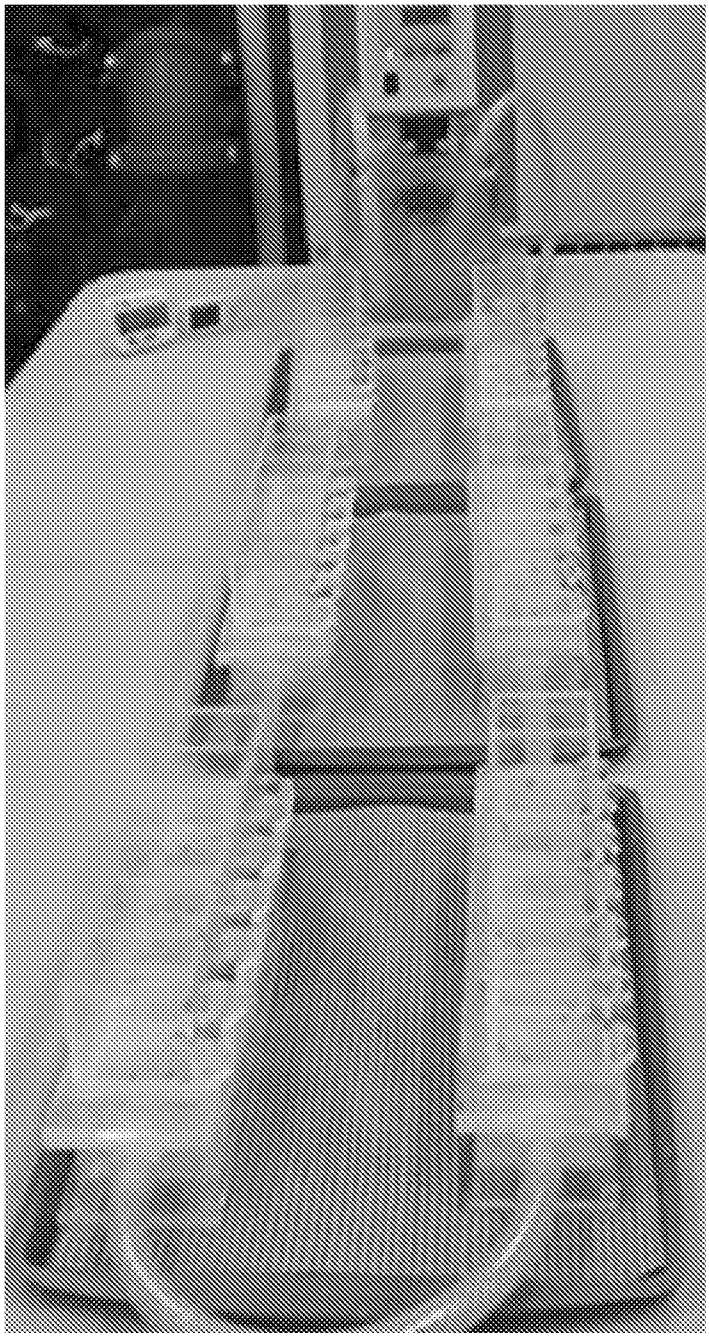

Figure 23

INTERNATIONAL SEARCH REPORT

International application No.
PCT/US2017/014540

A. CLASSIFICATION OF SUBJECT MATTER
IPC(8) - A01N 65/22; A01N 25/00; A01N 25/02; A01N 43/00; A01N 65/00; A01P 17/00 (2017.01)
CPC - A01N 65/22; A01N 25/00; A01N 25/02; A01N 43/00; A01N 65/00 (2017.02)

According to International Patent Classification (IPC) or to both national classification and IPC

B. FIELDS SEARCHED

Minimum documentation searched (classification system followed by classification symbols)
See Search History document

Documentation searched other than minimum documentation to the extent that such documents are included in the fields searched
USPC - 383/38; 424/400; 424/405; 424/409; 514/1 (keyword delimited)

Electronic data base consulted during the international search (name of data base and, where practicable, search terms used)
See Search History document

C. DOCUMENTS CONSIDERED TO BE RELEVANT

Category*	Citation of document, with indication, where appropriate, of the relevant passages	Relevant to claim No.
A	US 2014/0242135 A1 (VANDERBILT UNIVERSITY) 28 August 2014 (28.08.2014) entire document	1-23
A	US 2015/0043838 A1 (JAOUEN) 12 February 2015 (12.02.2015) entire document	1-23
A	US 2009/0069407 A1 (GRIES et al) 12 March 2009 (12.03.2009) entire document	1-23
P, X	MCQUARRIE. This MosquitoPaQ Pouch Attracts Bugs to Draw Them Away from Humans, Trend Hunter Eco, 21 September 2016 [retrieved on 07 March 2017]. Retrieved from the Internet: <URL: http://www.trendhunter.com/trends/mosquito-deterrent> entire document	1-23

☐ Further documents are listed in the continuation of Box C. ☐ See patent family annex.

* Special categories of cited documents:
"A" document defining the general state of the art which is not considered to be of particular relevance
"E" earlier application or patent but published on or after the international filing date
"L" document which may throw doubts on priority claim(s) or which is cited to establish the publication date of another citation or other special reason (as specified)
"O" document referring to an oral disclosure, use, exhibition or other means
"P" document published prior to the international filing date but later than the priority date claimed
"T" later document published after the international filing date or priority date and not in conflict with the application but cited to understand the principle or theory underlying the invention
"X" document of particular relevance; the claimed invention cannot be considered novel or cannot be considered to involve an inventive step when the document is taken alone
"Y" document of particular relevance; the claimed invention cannot be considered to involve an inventive step when the document is combined with one or more other such documents, such combination being obvious to a person skilled in the art
"&" document member of the same patent family

Date of the actual completion of the international search	Date of mailing of the international search report
07 March 2017	20 APR 2017
Name and mailing address of the ISA/US Mail Stop PCT, Attn: ISA/US, Commissioner for Patents P.O. Box 1450, Alexandria, VA 22313-1450 Facsimile No. 571-273-8300	Authorized officer Blaine R. Copenheaver PCT Helpdesk: 571-272-4300 PCT OSP: 571-272-7774

Form PCT/ISA/210 (second sheet) (January 2015)