C. H. SHEASLEY.

PACKER FOR OIL WELLS.

APPLICATION FILED OCT. 8, 1917.

1,262,107.

Patented Apr. 9, 1918.

3 SHEETS—SHEET 1.

Fig. 1.

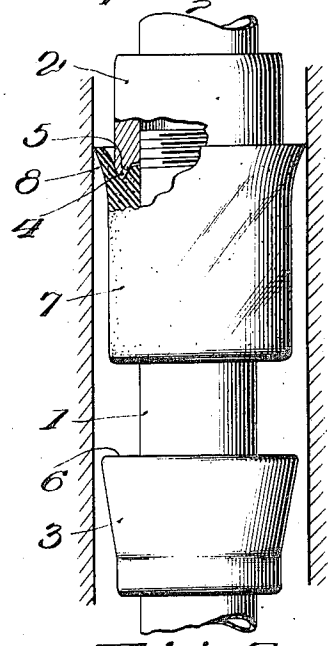

Fig. 2.

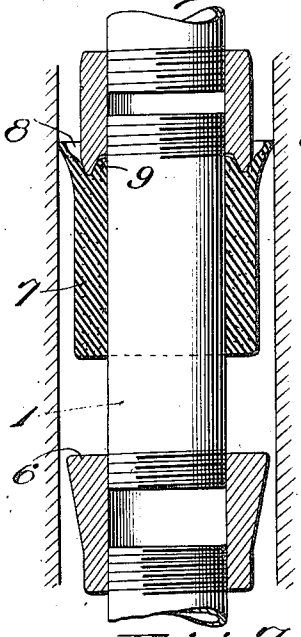

Fig. 3.

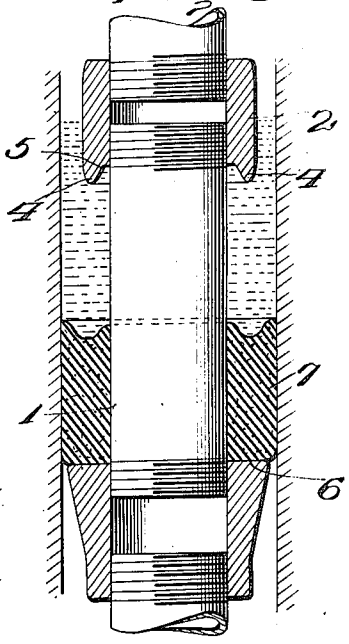

Fig. 4.

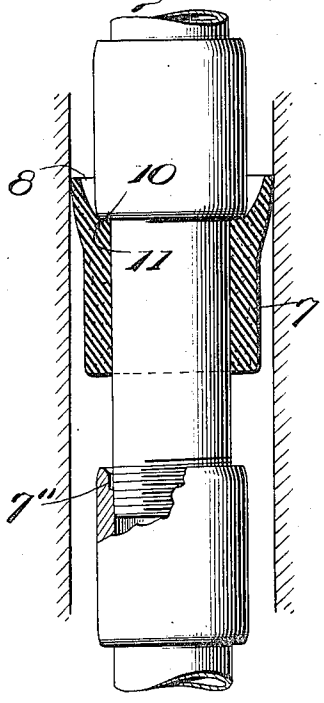

Fig. 7.

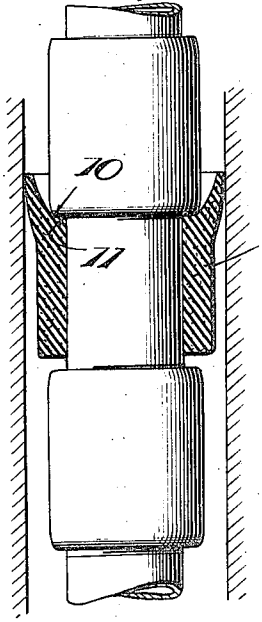

Fig. 5.

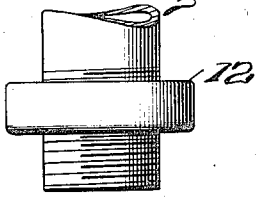

Fig. 6.

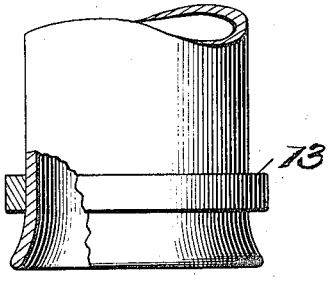

INVENTOR

Charles H. Sheasley

BY

Mauro, Cameron, Lewis & Massie

Attorneys

C. H. SHEASLEY.

PACKER FOR OIL WELLS.

APPLICATION FILED OCT. 8, 1917.

1,262,107.

Patented Apr. 9, 1918.

3 SHEETS—SHEET 2.

Fig. 8.

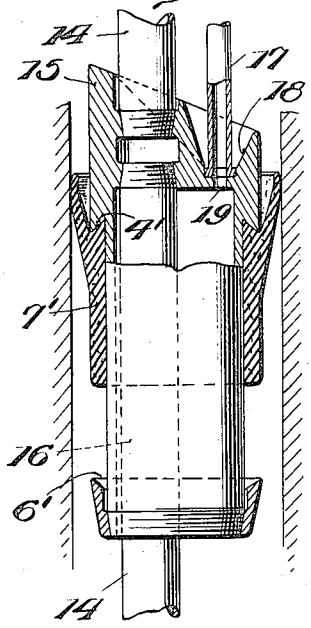

Fig. 9.

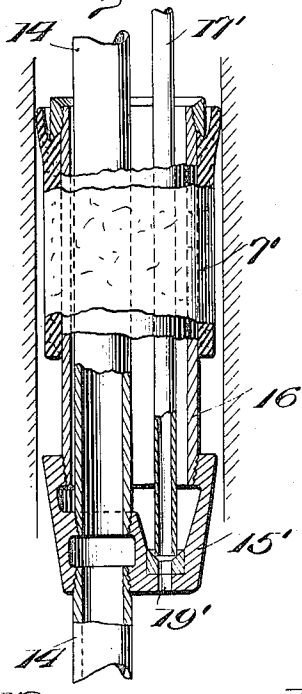

Fig. 10.

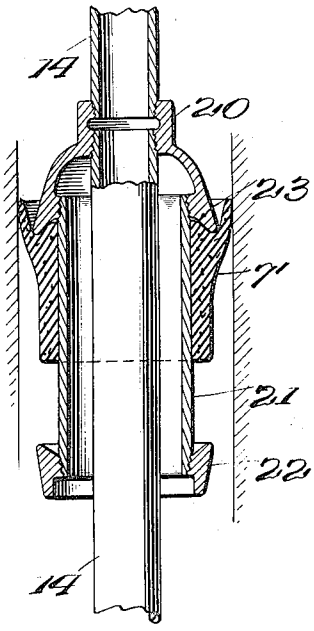

Fig. 12.

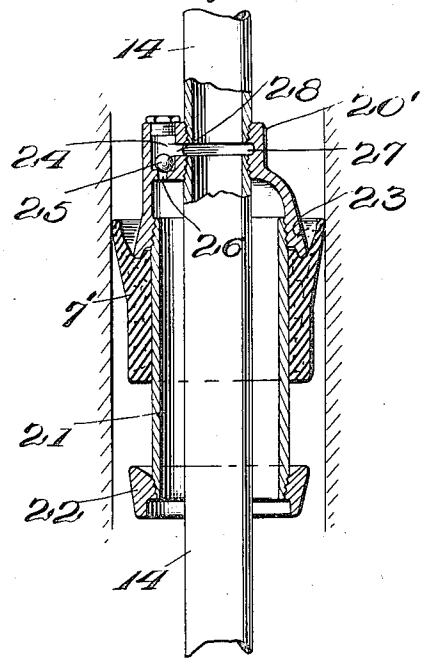

Fig. 11.

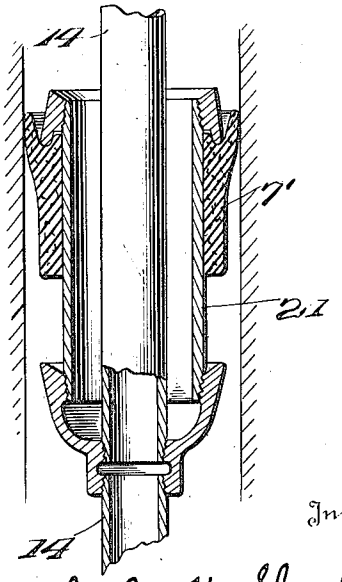

Inventor

Charles H. Sheasley

By Mauro, Cameron, Lewis & Massie

Attorneys

C. H. SHEASLEY.

PACKER FOR OIL WELLS.

APPLICATION FILED OCT. 8, 1917.

1,262,107.

Patented Apr. 9, 1918.

3 SHEETS—SHEET 3.

Fig. 13.

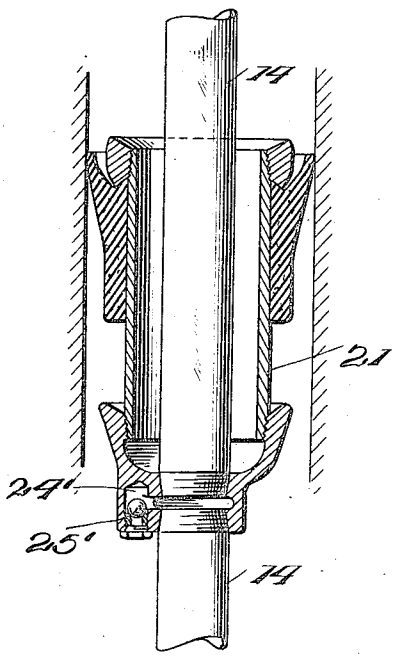

Fig. 14.

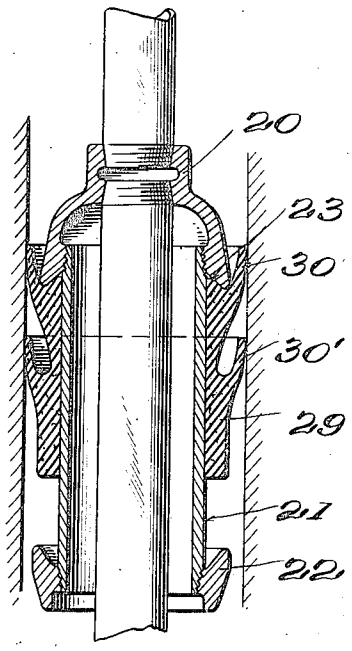

Fig. 15.

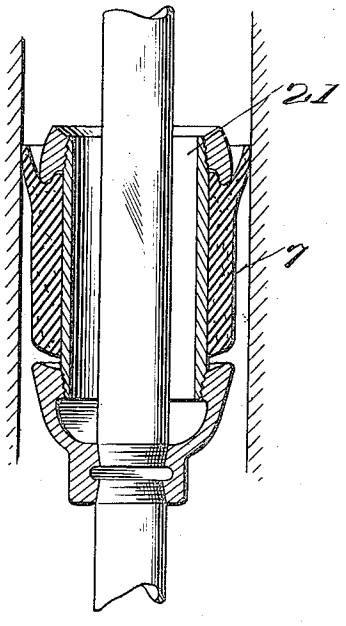

Fig. 16.

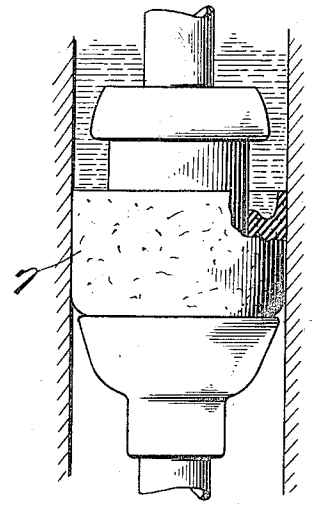

Inventor

Charles H. Sheasley

By Munn, Cameron, Lewis & Massie

Attorneys

UNITED STATES PATENT OFFICE.

CHARLES H. SHEASLEY, OF FRANKLIN, PENNSYLVANIA, ASSIGNOR TO PRODUCERS SUPPLY COMPANY, OF FRANKLIN, PENNSYLVANIA, A CORPORATION OF PENNSYLVANIA.

PACKER FOR OIL-WELLS.

1,262,107. Specification of Letters Patent. Patented Apr. 9, 1918.

Application filed October 8, 1917. Serial No. 195,452.

To all whom it may concern:

Be it known that I, CHARLES H. SHEASLEY, a citizen of the United States of America, and a resident of Franklin, Venango county, Pennsylvania, have invented a new and useful Improvement in Packers for Oil-Wells, which invention is fully set forth in the following specification.

This invention relates to packers for oil-wells, and has for its objects, generally stated, to simplify the construction of such packers, cheapen their cost, facilitate their introduction into and withdrawal from the well, and increase their efficiency of operation when in position in the well.

Many oil-wells at the present time produce but an extremely small quantity of oil, and it is therefore essential that the cost of operation should be reduced to the minimum, in order that they may be operated at a profit. Packers are one of the elements involved in the cost of operation, and it is not only essential, therefore, that the first cost of the packers should be small, but that they should be capable of being withdrawn for cleaning the well or for repair purposes, or otherwise. These objects must be accomplished without impairing the efficiency of the packers in their operation of closing the well against the downward passage of water from the upper strata into the oil bearing portion of the well. These features of simplicity of construction, low cost and efficient operation of the packers are important, of course, even in wells of large production. But in wells of extremely small production, the cost of operation must be reduced to a very small figure, or the well cannot be operated at all.

With the objects above set forth, the present invention, generally stated, consists in a tubular element (which may or may not be a section of the well-tubing) provided with an upper and a lower shoulder rigid therewith, and a packing-ring of suitable material, such as rubber, surrounding and longitudinally movable on said tubular element into contact with said shoulders (that is, into contact with the upper shoulder when the ring is moved to its upper position, and into contact with the lower shoulder when the ring is moved to its lowermost position) and exposed to the direct action of the upper column of water in the well. Preferably, the packing-ring is provided with an outwardly flaring annular lip to embrace the upper shoulder on the tubular member when the packer is being placed in the well, and said shoulder may, if desired, be flared upwardly and outwardly in the shape of an inverted frustum of a cone, though this is not essential. When the packer is in position in the well, a column of water engages the interior surface of said lip and acts to force the lip firmly into packing relation with the interior wall of the well, and also to force the packing-ring down against the lower shoulder on the tubular element, and the great hydrostatic pressure acts to compress the ring and cause it to effectively pack the joint between the wall of the well and the ring, and the joint between said ring and the tubular element. The direct action of the water on the packing-ring, without the intervention of any metallic or other rigid element, is of much importance, since such rigid intermediate device would act to bind the lip of the packing-ring between the said element and the wall of the well, and thereby prevent the lip from entering any irregularities or eccentricities in the wall with close enough contact to produce efficient packing.

The tubular element which is surrounded by and carries the packing-ring may be and frequently is the well-tubing inserted in the well and the upper and lower shoulders between which the packing-ring is mounted, and has longitudinal movement, may be formed on ordinary pipe couplings; in fact, may be simply the end of the respective pipe couplings.

When the well is of any considerable diameter, however, it is much more economical to construct said tubular element in the form of a sleeve surrounding the well-tubing and supported thereon through the medium of a suitably formed coupling, or otherwise. In this case, the coupling or other support for the sleeve may have one of the shoulders for coöperation with the packing-ring formed thereon, and the other shoulders may be formed or supported on the sleeve. The end of the sleeve where it is secured to the coupling or other support is closed to prevent the passage of water through the sleeve, and

the other end is preferably left open. Such open end may be either the upper or the lower end, as desired. The supporting coupling may also be provided with an opening therethrough, in which is inserted a pipe to permit the escape of gas which accumulates below the packing; or an automatic valve may be provided in the coupling which permits the gas to escape upward through the well-tubing.

The inventive idea involved is capable of receiving a variety of mechanical expressions, some of which are shown in the accompanying drawings, but it is to be expressly understood that such drawings are for the purpose of illustration only, and are not meant to define the limits of the invention, reference being had to the appended claims for this purpose.

In such drawings—

Figure 1 is a side elevation, parts being broken away, showing the form which the invention may assume when the well-tubing constitutes the tubular element upon which the packing-ring moves longitudinally between the upper and lower shoulders;

Fig. 2 is a central, vertical section of Fig. 1, the well-tubing being shown in elevation, and the packing-ring shown in the position which it assumes when it is being inserted in the well;

Fig. 3 is a like view with the packing-ring in the position which it assumes when in packing position in the well;

Fig. 4 is a view similar to Fig. 1, but illustrating a slightly different form of upper and lower shoulders;

Fig. 5 is a detail showing still another form of shoulder that may be employed;

Fig. 6 is a detail illustrating one of several forms of the shoulder that may be employed on the lowermost section of the well-casing;

Fig. 7 is a view designed to illustrate the fact that the extent of longitudinal movement of the packing-ring upon the tubular element may be small;

Fig. 8 is a view, partly in central section and partly in elevation, showing a tube coupling supporting a downwardly extending tubular element upon which the packing-ring is located, said tubular element being open at the bottom and permitting passage of the gas to a gas escape pipe carried by the coupling;

Fig. 9 is a view similar to Fig. 8, showing the tubular element open at the top rather than the bottom, and having the gas escape pipe extending therethrough;

Fig. 10 is a vertical, longitudinal section of a simple form of the invention employing the tubular sleeve opening downward, and Fig. 11 is a view similar to Fig. 10, showing said sleeve opening upward;

Fig. 12 is a view similar to Fig. 10, illustrating the use of an automatic valve carried by the coupling for permitting the escape of gas into the well-tubing, and Fig. 13 is a view similar to Fig. 11, showing an automatic valve for a like purpose;

Fig. 14 is a vertical, longitudinal section with parts in elevation, showing another form which the packing-ring may assume;

Fig. 15 is a view of the packing-ring on an upwardly opening sleeve, which ring, however, is capable of but slight longitudinal movement on the sleeve; and

Fig. 16 is a view in side elevation, with parts broken away, of the construction shown in Fig. 15, with the ring compressed when in packing position.

Referring to the several views of the drawings, in which like reference numerals indicate like parts, and first to Figs. 1, 2 and 3, 1 is the tubular element, which in this case is a short section of the well-tubing itself. 2 is an upper coupling, and 3 a lower coupling, by means of which two couplings the tubular element 1 is coupled to the upper and the lower portions of the well-tubing, as will be readily understood. The upper coupling 2 is provided with any suitable shoulder 4, and in the present instance this shoulder is shown as flaring outwardly and upwardly in the form of an inverted frustum of a cone, and preferably said shoulder is undercut, as shown at 5. The coupling 3 is provided with any suitably formed shoulder 6, which as shown in Figs. 1, 2 and 3, is in the form of a horizontal shoulder, but which, if desired, may be undercut, as shown at 7″ in Fig. 4, or it may be otherwise formed. Surrounding the tubular element 1, between the shoulders 4 and 6, is a packing-ring 7, preferably of elastic material, such as rubber, which ring is preferably provided with an outwardly flaring, upwardly extending annular lip 8 surrounding and embracing the shoulder 4 on the coupling 2 when the ring is in its uppermost position shown in Fig. 1, and if the shoulder is undercut, as shown in Figs. 2 and 3, there is also preferably provided an upwardly extending, inwardly sloping lip 9 entering the undercut portion of the shoulder. If desired, however, the packing ring may be provided only with the outwardly flaring lip 8 to embrace the upper shoulder, and this upper shoulder may be made approximately squared or horizontal, as shown in Figs. 4 and 7, at 10, and engaging a correspondingly squared shoulder 11 on the packing-ring 7.

Instead of employing two couplings, and utilizing the ends of the respective couplings for the two shoulders, the shoulders may, if desired, assume any other form, as for example, a ring or collar 12 (Fig. 5), suitably secured to the well-tubing, as by screw-threading the same thereon, as will be

readily understood from an inspection of the last-named figure.

If the packer is to be placed at the extreme lower end of the well-casing, at which point the casing is generally provided with a flared end or mouth, the lower shoulder may be, and preferably is, formed by means of any suitable collar 13 driven or shrunken or otherwise secured on the well-casing on the lower end thereof, as illustrated in Fig. 6.

Referring to Fig. 8, 14, 14 are sections of the well-tubing coupled together by a coupling 15, which coupling is provided with a downwardly extending tubular portion 16, here shown as integral with the coupling 15, though, if desired, said tubular portion may be formed separate from the coupling proper, and screw-threaded or otherwise secured thereto. Such construction is shown in inverted form in Fig. 9, in which the tubular portion 16′ is screw-threaded into a coupling 15′.

Referring again to Fig. 8, the packing-ring 7′ surrounds the tubular element 16, and is provided with upwardly flaring lip portions on its upper edge corresponding to those shown in Fig. 1. Coupling 15 is provided with a downwardly facing shoulder 4′, which in this case is not shown as flaring outwardly and upwardly, as in Fig. 1, the same being merely designed to illustrate the fact that a variety of forms of shoulders may be employed as desired. A gas pipe 17 is fitted into a conical socket 18, in the bottom of which there is a port or opening 19 leading to the interior of the tubular element 16, which is open at its bottom, to the end that gas in the well below the packing may rise up through the tubular element and escape through the pipe 17.

On the lower end of the tubular element 16 there is a collar secured preferably by being screw-threaded thereon, which collar forms a lower shoulder 6′, and the packing-ring 7′ is capable of longitudinal movement on the tubular element 16 between the shoulders 4′ and 6′, as will be readily understood.

Referring to Fig. 9, it will be seen that it is but an inversion of Fig. 8, so to speak. In this case, the coupling 15′ carries the lower shoulder; the tubular element 16′ is carried by said coupling, and projects upward therefrom, and is open at its upper end and provided with an upper shoulder thereon. The gas pipe 17′ passes downward through the tubular element or sleeve 16′, and is supported or carried by the coupling 15′, through which is the gas escape opening or port 19′.

In case the gas escape pipe is not employed, a simplified form of coupling by means of which the tubular element or sleeve is carried by the well-tubing is illustrated in Figs. 10 and 11. In Fig. 10 the coupling 20 for securing the two sections 14, 14, of the well-tubing together, has an enlarged lower portion provided with interior screw-threads into which the tubular sleeve 21 is screw-threaded (though, if desired, this sleeve may be formed integral with the coupling 20). Said sleeve is provided with a collar 22 screw-threaded thereon and having a suitable shoulder, here shown as undercut and forming the lower shoulder on the tubular element, the upper shoulder which may assume any desired form being shown at 23. Between the upper and lower shoulders on the tubular element 21 is the packing-ring 7′ of substantially the character shown in Fig. 8.

Referring to Fig. 11, and comparing the same with Fig. 10, it will be seen that the construction therein shown is substantially an inversion of Fig. 10, so that the sleeve 21 is open at the top in Fig. 11, instead of at the bottom as in Fig. 10.

Fig. 12 is a construction in all respects similar to that shown in Fig. 10, except that there is formed in the coupling 20′ a passage 24 leading from the interior of the tubular element 21 into the interior of the coupling 20′. In this passage 24 there is located a ball valve 25 controlling a port 26. Formed on the interior of the coupling is an annular groove 27 communicating with the passage 24 through means of a port 28. Since the screw-threaded connections between the well-tubing and the coupling are slightly conical, the inward movement of said sections is limited, so that the ends of said sections do not meet, and thus there is afforded direct communication through the passage 24, the ports 26 and 28, and the annular groove 27 between the interior of the sleeve 21 and the interior of the well-tubing. When pumping is in progress, the valve permits gas to escape from below the packing directly into the well-tubing and upward with the oil.

Fig. 13 corresponds to Fig. 11, showing a ball valve 25′ for permitting the escape of the gas through a passage 24′ in the coupling directly into the well-tubing, as will be readily understood.

In some cases, to secure greater certainty of effective packing, it is desirable to form the packing-ring with a plurality of upwardly extending and outwardly flaring lips, and such construction is shown in Fig. 14, in which the packing-ring 29 is shown as being provided with two such upwardly projecting and outwardly flaring lips 30, 30′, one above the other, the upper one in engagement with the shoulder 23 on the coupling 20, as in Fig. 10. This avoids defective packing due to irregularities in the wall of the well, forms a more flexible packing, and serves to decrease the pressure of the water below the packing on the lip 30

when the packing is being inserted in the well.

Fig. 15 is similar to Fig. 11, and is designed to illustrate the fact that the distance through which the packing-ring may move between the upper and the lower shoulders on the tubular element 21 may be greatly decreased from that shown in all of the other figures, except Fig. 7.

From the foregoing, it will be seen that my improved packer is capable of being embodied in an extremely simple, highly efficient and yet cheaply constructed form. Thus, as shown in Figs. 1, 2, 3, 4 and 7, it may simply consist of a packing-ring longitudinally movable on a short section of the well-tubing between shoulders formed on couplings for said tubing. As the packer is being inserted in the well, the upper shoulder enters the flared lip portion of the packing-ring, and expands its outer periphery into contact with the wall of the well, and the downward motion of the well-tubing as it is in the act of being inserted into the well holds the parts in this position, which position is illustrated in Figs. 1, 2, 4 and 7. When the tubing has reached the desired position in the well, it is anchored or suspended in any suitable way, and when the pumping action begins, the pressure below the packing-ring is decreased, and the hydrostatic pressure above the ring acts to force the ring downward into contact with the lower shoulder rigidly formed on the tubular element. This pressure is very great, and acts to highly compress the ring, and to force it into intimate contact with the wall of the well and with the exterior surface of the tubular element, thus efficiently packing both of these joints against the passage of water. This position of the packing-ring is clearly illustrated in Figs. 3 and 16, from which its action in the various forms shown in the other figures will be readily understood.

The wall of the oil-well frequently has irregularities present therein, such irregularities being due to eccentricities in the well or the breaking out of pebbles or shale when the well is being bored. If any rigid following element were imposed upon the packing-ring, and particularly if such following element entered the groove in the top of the packing-ring, it would act to seize the entire periphery of the packing-ring between said following element and the wall of the well, and if the irregularities, eccentricities or pits in the well occurred opposite said lip, the latter would be restrained by this seizure thereof through the medium of the following element, and prevented from efficiently entering such irregularities. By subjecting the packing-ring to the direct action of the pressure of the column of water above the ring, this seizure of the lip of the packing-ring is avoided, and the same enters and as efficiently packs irregular portions of the well as it does the regular and smoothly formed portions.

By providing the well-tubing with the sleeve, and combining the support for said sleeve with the coupling for the sections of the well-tubing, and providing means for the escape of gas either through a separate pipe or through the well-tubing carried by said coupling, the cost of construction is greatly reduced, and in fact the packer is reduced to its lowest terms.

While for the purpose of illustrating the invention, I have shown a number of the forms which the invention may assume, it is to be expressly understood that it is not designed thereby to exclude other forms in which the essential feature of the invention, to wit, a tubular element provided with upper and lower shoulders rigid therewith, between which a packing-ring is capable of longitudinal movement so as to contact with said shoulders, is present.

What is claimed is:—

1. In an oil-well packer, the combination of a tubular element having upper and lower shoulders rigid therewith, and a packing-ring longitudinally movable on said tubular element into contact with said shoulders.

2. In an oil-well packer, the combination of a tubular element supported by the well-tubing, upper and lower shoulders rigid with said tubular element, and a packing-ring longitudinally movable on said tubular element into contact with said shoulders.

3. In an oil-well packer, the combination of a tubular element having upper and lower shoulders rigid therewith, and a packing-ring longitudinally movable on said tubular element into contact with said shoulders, said ring having an upwardly projecting outwardly flaring lip to embrace said upper shoulder.

4. In an oil-well packer, the combination of a tubular element having upper and lower shoulders rigid therewith, one of said shoulders being formed on a coupling for the well-tubing, and a packing-ring longitudinally movable on said tubular element into contact with said shoulders.

5. In an oil-well packer, the combination of a tubular element surrounding the well-tubing and supported thereon by a coupling for the latter, upper and lower shoulders rigid with said tubular element, one of said shoulders being formed on said coupling, and a packing-ring longitudinally movable on said tubular element into contact with said shoulders.

6. In an oil-well packer, the combination of a tubular element surrounding the well-tubing and supported thereon by a coupling for the latter, means carried by said coupling for permitting the escape of gas, upper and lower shoulders rigid with said tu-

bular element, and a packing-ring longitudinally movable on said tubular element into contact with said shoulders.

7. In a packer for oil-wells, the combination of a tubular element surrounding the well-tubing and supported thereon by a coupling for the latter, means carried by said coupling for permitting the escape of gas through said tubular element, upper and lower shoulders rigid with said tubular element, and a packing-ring longitudinally movable on said tubular element into contact with said shoulders.

8. In a packer for oil-wells, the combination of a tubular element surrounding the well-tubing and supported thereon by a coupling for the latter, said tubular element being closed at one end and open at the other, upper and lower shoulders rigid with said tubular element, and a packing-ring longitudinally movable on said tubular element into contact with said shoulders.

9. In a packer for oil-wells, the combination of a tubular element surrounding the well-tubing and supported thereon by a coupling for the latter, one of the ends of said tubular element being also closed by said coupling and the other end of said tubular element being open, means carried by said coupling for permitting the escape of gas, upper and lower shoulders rigid with said tubular element, and a packing-ring longitudinally movable on said tubular element into contact with said shoulders.

10. In an oil-well packer, the combination of a tubular element surrounding the well-tubing, a coupling for the sections of the well-tubing to which said tubular element is rigidly secured, means carried by said coupling for permitting the escape of gas, a shoulder formed on said coupling, a second shoulder supported by said tubular element, and a packing-ring longitudinally movable on said tubular element into contact with said shoulders.

11. In an oil-well packer, the combination of a well-tubing, a coupling for the sections of said tubing, a tubular element surrounding the well-tubing and supported by said coupling, one end of said tubular element being closed by said coupling, an opening extending vertically through said coupling, a gas-escape pipe fitting into said opening and supported by said coupling, upper and lower shoulders rigid with said tubular element, one of said shoulders being formed on said coupling, and a packing-ring longitudinally movable on said tubular element into contact with said shoulders.

12. In an oil-well packer, the combination of a tubular element having upper and lower shoulders rigid therewith, and a packing-ring longitudinally movable on said tubular element into contact with said shoulders, said ring being provided with an upwardly and outwardly flaring lip engaged and expanded by said upper shoulder.

13. In an oil-well packer, the combination of a tubular element having upper and lower shoulders rigid therewith, and a packing-ring longitudinally movable on said tubular element into contact with said shoulders, said packing-ring being provided with an upwardly and outwardly flaring lip and an upwardly and inwardly sloping lip, said upper shoulder entering between said lips and forcing the same into packing position when said ring is in its uppermost position.

14. In an oil-well packer, the combination of a tubular element having upper and lower shoulders rigid therewith, and a packing-ring longitudinally movable on said tubular element into contact with said shoulders, said lower shoulder being undercut to receive the lower end of the packing-ring to force it into intimate packing relation with said tubular element.

15. In a packer for oil-wells, the combination of a tubular element having upper and lower undercut shoulders rigid therewith, and a packing-ring longitudinally movable on said tubular element into intimate contact with said shoulders.

In testimony whereof I have signed this specification.

CHARLES H. SHEASLEY.

Witnesses:
WM. B. GRIFFEN,
JOHN L. MCBRIDE.