July 25, 1967 J. D. WILSON 3,332,558

STORAGE AND DISPLAY RACK

Filed Aug. 16, 1965 2 Sheets-Sheet 1

Fig. 1

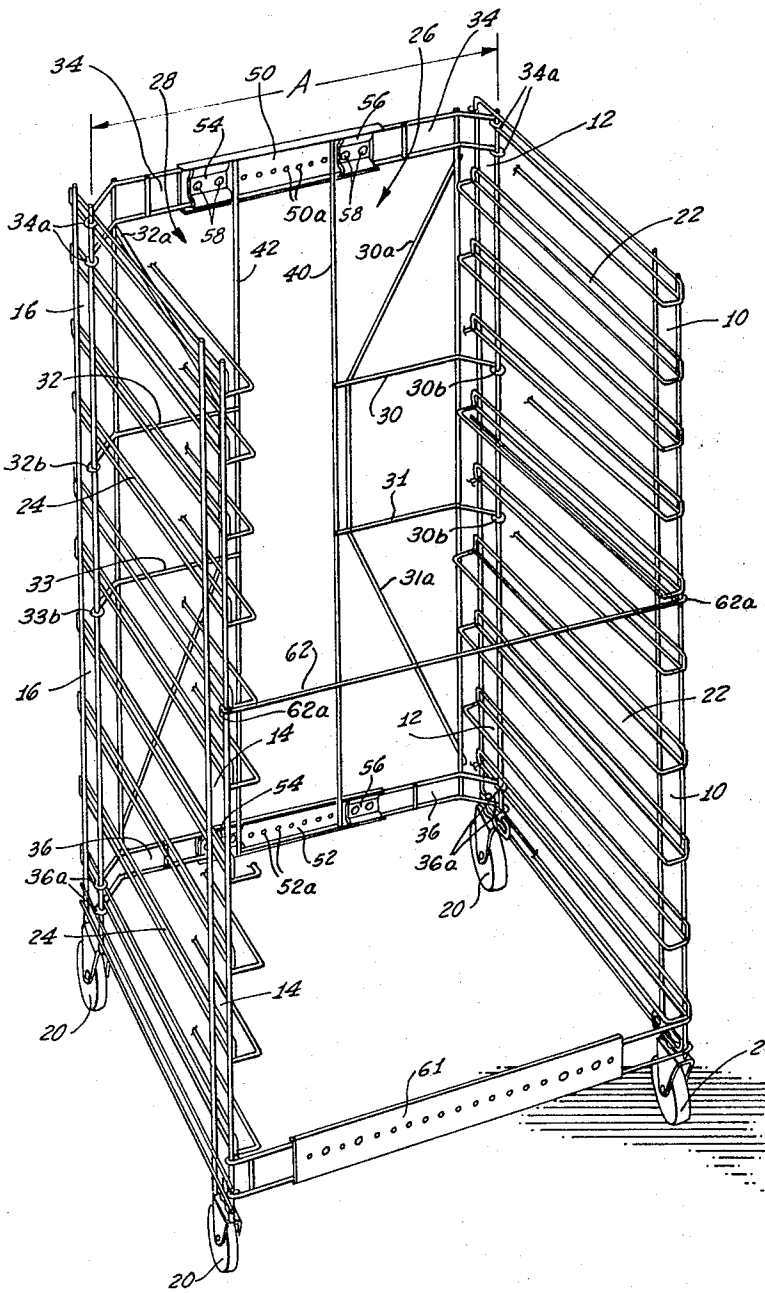

INVENTOR:
James D. Wilson

By Kirk D. Beecher

Attorney

July 25, 1967 J. D. WILSON 3,332,558

STORAGE AND DISPLAY RACK

Filed Aug. 16, 1965 2 Sheets-Sheet 2

Fig. 2

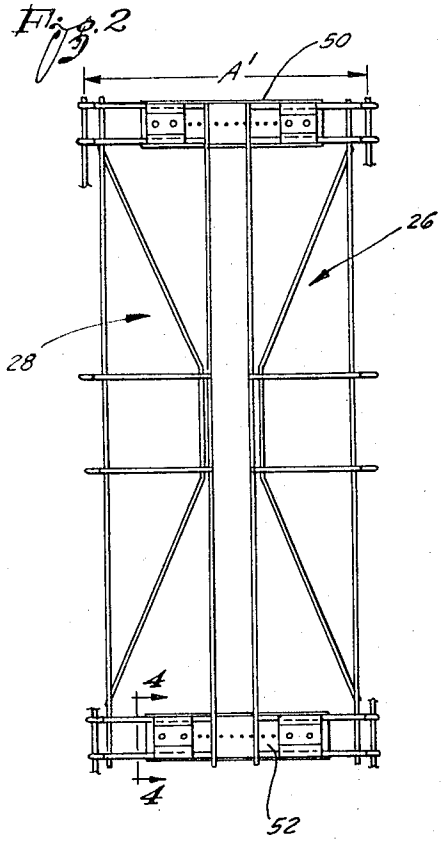

Fig. 3

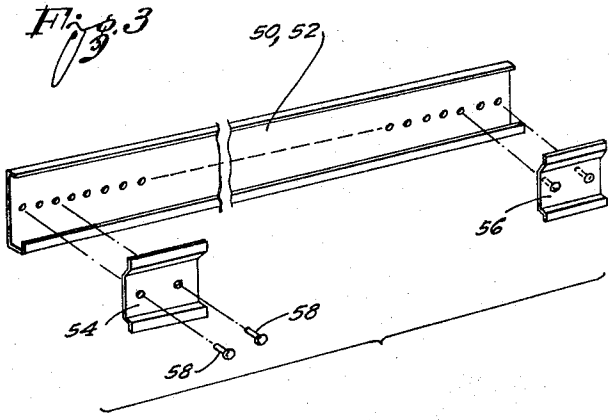

Fig. 4

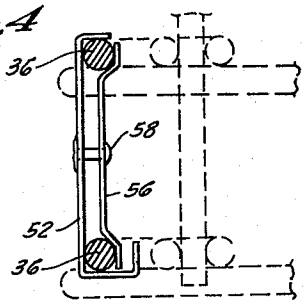

Fig. 5

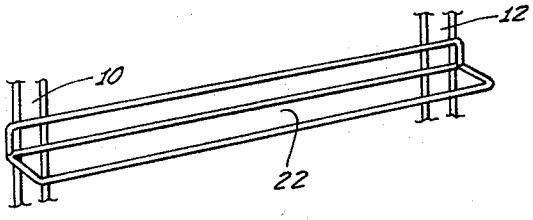

INVENTOR:
James D. Wilson

By Keith D. Beecher
Attorney

United States Patent Office 3,332,558 Patented July 25, 1967

3,332,558

STORAGE AND DISPLAY RACK

James D. Wilson, Long Beach, Calif., assignor to Banner Metals Inc., Compton, Calif., a corporation of Ohio

Filed Aug. 16, 1965, Ser. No. 480,071
5 Claims. (Cl. 211—175)

The present invention relates to storage racks, and it relates more particularly to adjustable storage display racks which may be assembled to different widths so as to meet different customer requirements.

Collapsible storage display racks are in widespread use at the present time. Such racks are intended, for example, to support a plurality of display trays in a spaced, tiered relationship.

In the past, the storage racks have been tailor made to order in different widths to meet the requirements of different customers. This has raised a problem, however, in that the production of the storage racks in the past has had to proceed more or less on a custom basis. That is, it has been the usual practice to manufacture storage racks of a particular width only when an order was received for that particular width. Therefore, orders could not normally be filled promptly or on an "off the shelf" basis.

In practicing the present invention, however, storage racks can be constructed in a mass quantity and held in stock. This is because the racks need not be constructed to any particular width. Then, when an order is received for racks of a particular width, a simple adjustment of the racks constructed in accordance with the invention establishes them at that width. Therefore orders can be filled promptly, and storage racks of any desired width can be supplied without the need for production being tailored to that particular width.

An object of the present invention, therefore, is to provide an improved storage rack assembly which is capable of being adjusted to any desired width to meet the particular size of the trays to be supported in the rack.

Another object of the invention is to provide such an improved storage rack assembly which can be set and maintained to such a desired width.

The storage display rack to be shown and described herein is of the foldable, wheeled type. Its width can be adjusted, in accordance with the concepts of the invention, so as to permit different tray sizes of a range of 18–25 inches in width, for example, to be received therein. The trays are held in a tiered relationship in the rack.

The storage rack assembly to be described includes a plurality of wedge-type adjustable strap, or bracket assemblies, each of which is bolted, riveted, or otherwise fastened in place when the assembly is set to a desired width. These brackets serve to hold the assembly rigidly to the selected width, as will be described.

The features of the invention which are believed to be new are set forth with particularity in the claims. The invention itself, however, together with further objects and advantages, may best be understood by reference to the following description, when the description is taken in conjunction with the accompanying drawing, in which:

FIGURE 1 is a perspective elevational view of an improved storage and display rack constructed in accordance with one embodiment of the invention, and established at a predetermined width;

FIGURE 2 is an elevational view of the rear wall of the storage and display rack of FIGURE 1, with the width adjusted to a narrower dimension;

FIGURE 3 is a perspective exploded view of an adjustable strap assembly which is incorporated into the construction of the storage and display rack of the illustrated embodiment of the invention;

FIGURE 4 is a sectional view, taken substantially on the line 4—4 of FIGURE 2, but on an enlarged scale, showing the manner in which the adjustable strap assembly of FIGURE 3 serves to engage the bar of the rear wall to hold the assembly rigidly to a predetermined width; and

FIGURE 5 is a perspective view of a bracket assembly which serves to support display trays on the storage rack in a tiered relationship.

The display and storage rack shown in FIGURE 1, for example, includes a first pair of upright support posts, designated **10** and **12**, and a second pair of upright support posts designated **14** and **16**. The upright support posts **10**, **12**, **14** and **16** in the illustrated embodiment, are each formed of a pair of spaced parallel rods or bars. A plurality of wheels **20** are pivotally mounted to the lower ends of respective ones of the support posts in appropriate supporting brackets. The wheels may be in the form of double ball-bearing swivel casters. They serve to provide mobility to the display rack.

A series of transverse shelf brackets **22** are welded, or otherwise affixed to the posts **10** and **12**. These shelf brackets extend between the posts at spaced intervals. The shelf brackets may be welded, or otherwise affixed, to the bars making up the posts **10** or **12**. A shelf bracket **22** is shown more clearly in FIGURE 5.

The shelf brackets **22** may extend at an inclination between the upright posts **10** and **12**, so that the display trays (not shown) supported thereby may be inclined towards the front of the storage rack.

A second series of similar shelf bracket **24** are welded or otherwise affixed to the upright support posts **14** and **16**, and they are aligned with corresponding one of the shelf brackets **22**.

It will be appreciated that the display trays (not shown) are supported in any convenient manner on the self brackets **22** and **24** when the storage rack is set up in the manner shown in FIGURE 1.

A pair of adjustable rear wall members designated generally as **26** and **28** form the rear wall of the display rack assembly. These adjustable rear wall members are made up of a series of bars or rods, as shown, including, for example, pairs of spaced transverse rods **30**, **31** and **32**, **33**; and diagonal rods **30***a*, **31***a*, **32***a*, and **33***a*, as shown. The ends of the transverse rods extend around one of the bars of each of the respective upright posts **12** and **16** to form knuckle-joints **30***b*, **31***b*, **32***b*, and **33***b*, as shown. This permits the side walls formed by the shelf brackets **22** and **24** to be folded around the rear wall members **26** and **28**.

Each of the rear wall members includes an upper pair of spaced, transverse bars **34** and a lower pair of spaced, transverse bars **36**. These latter pairs of transverse bars are also folded around one of the bars of the respective upright posts **12** and **16** to form knuckle-joints **34***a* and **36***a*, similarly to the coupling of the transverse bars **30** and **32**.

The members **26** and **28** making up the rear wall also have a pair of upright bars **40** and **42**. The transverse bars **30**, **32**, **34** and **36** are welded, or otherwise affixed, to the upright bars **40** and **42**.

A first apertured strap member **50** is shaped to receive the upper transverse bars **34** of each of the members **26** and **28**, as shown in FIGURE 1, for example. Likewise, a second apertured strap **52** is shaped to receive the lower pair of transverse bars **36** of each of the members **26** and **28**.

The configuration of the straps **50** and **52** is best shown in FIGURE 3. The transverse bars are received in channels at the edges of the straps, such as the straps **52**, as shown, for example, in FIGURE 4.

The bars **34** and **36** slide along the respective straps **50** and **52**, as the aforesaid side walls are moved together, until the display rack has a predetermined width. Then, a pair of additional wedging straps **54**, **56** are attached to the upper and lower straps **50** and **52** by appropriate fasteners, such as rivets **58**, bolts or other fastening means.

The rivets **58** extend through certain ones of the apertures **50***a* and **52***a* in the straps **50** and **52**. The rivets **58**, or other fastening means, serve to hold each of the straps **56** firmly against the transverse bars **34** and **36** in a wedging action, such as shown in FIGURE 4, for example, so as to hold the assembly firmly to the predetermined width.

An additional strap assembly **61**, similar to the strap assemblies discussed above, may be provided at the bottom of the front of the rack, as shown in FIGURE 1. A further bar **62** is coupled to the posts **10** and **14**, likewise forming knuckle-joints **62***a*, so as to permit a folding action of the assembly. The bar **62** is selected to have a length corresponding to the predetermined width of the storage and display rack, as established by the aforesaid adjustments of the rear wall.

The above-described components of the display rack may be composed, for example, of galvanized steel, high tensile aluminum, or any other appropriate material. A bright zinc finish may be provided, for example, when the basic construction of the assembly is steel.

It will be appreciated that when the assembly is set up as shown, for example, in FIGURE 1, it may conveniently be folded into a flat configuration without the need for removing any of the component parts. Then, when the assembly is opened out to the position shown in FIGURE 1, a plurality of display trays may be inserted into the shelf brackets **22** and **24** and supported therein in a tilted tiered relationship. When the trays are in place, the display rack itself is held firmly in the position shown in FIGURE 1.

It will also be appreciated that storage racks such as shown in FIGURE 1 may be constructed on a mass production basis, and held in stock. Then, when an order is received for a particular number of racks, required to accommodate trays of a particular length, then the assemblies are set up. This is achieved quickly and conveniently, merely by riveting the straps **54** and **56** to the strap **50** with the assembly at the particular width and by attaching a bar of a selected length, such as the bar **62**, to the forward side of the assembly.

The assembly of FIGURE 1 is shown as set to a particular width A, for example, whereas the assembly of FIGURE 2 is shown as set to a narrower width, designated A′.

The invention provides, therefore, an improved storage rack assembly for holding trays in a tiered, inclined position, for example. The assembly of the invention is particularly advantageous since it can be manufactured to any of a variety of predetermined widths, this being achieved in a simple and expeditious manner.

While a particular embodiment of the invention has been described, modifications may be made. The following claims are intended to cover the modifications which fall within the scope of the invention.

What is claimed is:

1. A rack assembly for supporting trays in a spaced tiered relationship including: first and second pairs of upright support posts; a plurality of shelf brackets affixed to the support posts of the respective first and second pairs for supporting the trays in a spaced tiered relationship; a pair of spaced adjustable means intercoupling one post of said first pair to one post of said second pair, each of said adjustable means including first and second pairs of transverse bars; a plurality of strap members overlapping one another in wedging relationship with said bars; and means for securing said strap members to one another and for holding the same in such a relationship with said bars; and at least one further bar intercoupling the other post of said first pair to the other post of said second pair.

2. A rack assembly for supporting trays in a spaced tiered relationship, including: first and second pairs of upright support posts; wheels pivotally mounted to the lower ends of respective ones of said support posts; a plurality of shelf brackets affixed to the support posts of the respective first and second pairs for supporting trays, and the like, in a spaced tiered relationship; a pair of spaced adjustable means intercoupling one post of said first pair to one post of said second pair, each of said adjustable means including a plurality of transverse bars and strap members overlapping one another in mutual wedging relationship with said transverse bars, and means for securing said strap members to one another and for holding the same in such a relationship with said bars; and at least one further transverse bar intercoupling the other post of said first pair to the other post of said second pair; said adjustable means and said further bar establishing a predetermined width for the rack assembly and permitting said first and second pairs of upright support posts to be folded adjacent one another when the aforesaid trays have been removed from the assembly.

3. The rack assembly defined in claim **2** and which includes an additional adjustable means intercoupling the other post of said first pair to the other post of said second pair.

4. A rack assembly for supporting trays, and the like, in a spaced, tiered relationship, including: first and second pairs of upright support posts; a plurality of shelf brackets affixed to the support posts of the respective first and second pairs for supporting trays, and the like, in a spaced, tiered relationship; and adjustable means intercoupling said first and second pairs of upright support posts and establishing a predetermined width for the rack assembly, said adjustable means including a plurality of transverse bars and a plurality of strap members overlapping one another in a wedging relationship with said bars, and means for securing said strap members to one another and for holding the said in said wedging relationship with said bars.

5. A rack assembly for supporting trays in a spaced, tiered relationship, including: first and second pairs of upright support posts; wheels pivotally mounted to the lower ends of respective ones of said support posts; a plurality of shelf brackets affixed to the support posts of the respective first and second pairs for supporting the trays in a spaced, tiered relationship; and adjustable means intercoupling said first and second pairs of upright support posts, said adjustable means establishing a predetermined width for the rack assembly and permitting said first and second pairs of upright support posts to be folded adjacent one another when the aforesaid trays have been removed from the assembly, each of said adjustable means including first and second pairs of transverse bars, strap members overlapping one another in wedging relationship with said bars, and means for securing said strap members to one another and for holding the same in such a relationship with said bars.

References Cited

UNITED STATES PATENTS

1,802,149	4/1931	Holt	211—178 X
1,929,467	10/1933	Bales	108—102
2,793,764	5/1957	Stork	211—178
2,994,441	8/1961	Browning	211—177
3,225,939	12/1965	Braun	211—148
3,232,442	2/1966	Wilson	211—133

ROY D. FRAZIER, *Primary Examiner.*

CLAUDE A. LE ROY, *Examiner.*

W. D. LOULAN, *Assistant Examiner.*