Jan. 5, 1965 G. K. BEEM ETAL 3,164,430

HOME FILE BOX

Filed May 7, 1962 2 Sheets-Sheet 1

Fig. 1

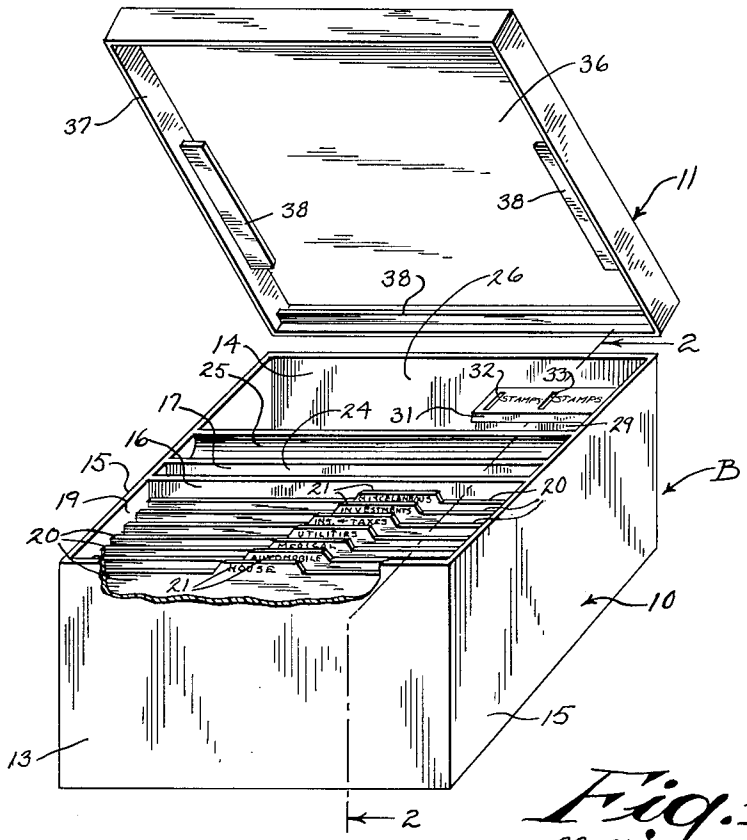

Fig. 4

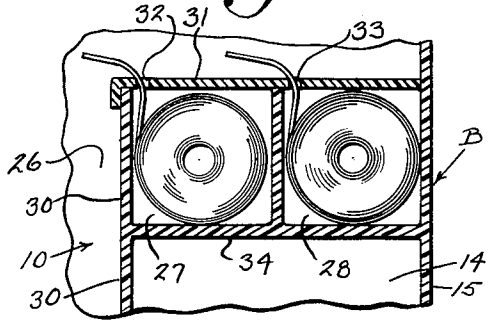

Fig. 5

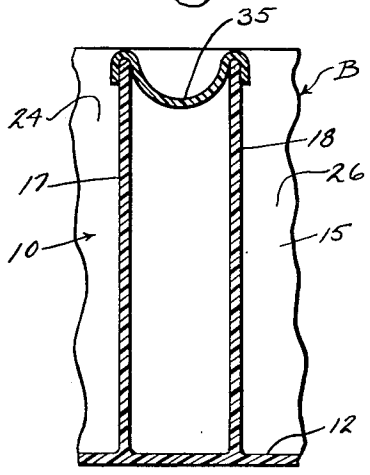

INVENTORS
GERALDINE K. BEEM
OWEN W. BEEM

BY

Wright & Wright

ATTORNEYS

Jan. 5, 1965 G. K. BEEM ETAL 3,164,430

HOME FILE BOX

Filed May 7, 1962 2 Sheets-Sheet 2

Fig. 2

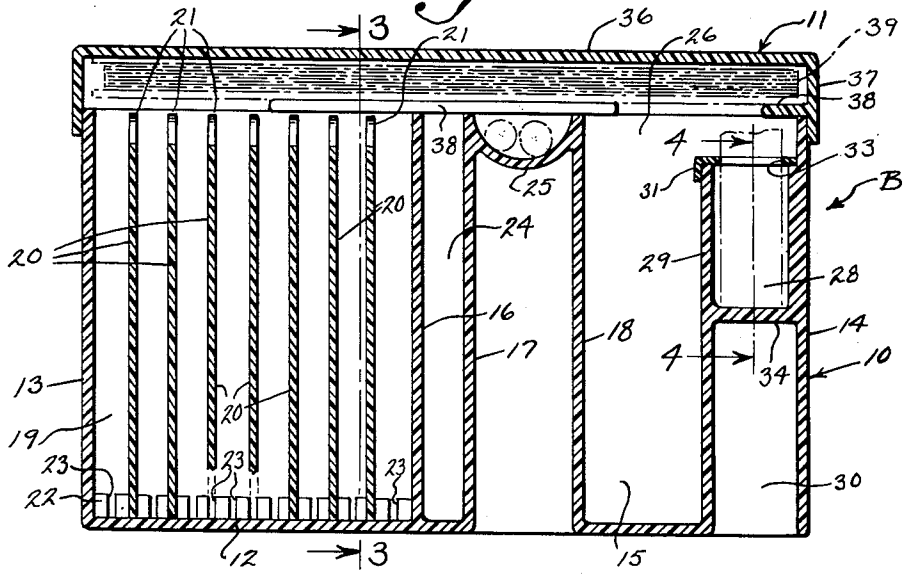

Fig. 3

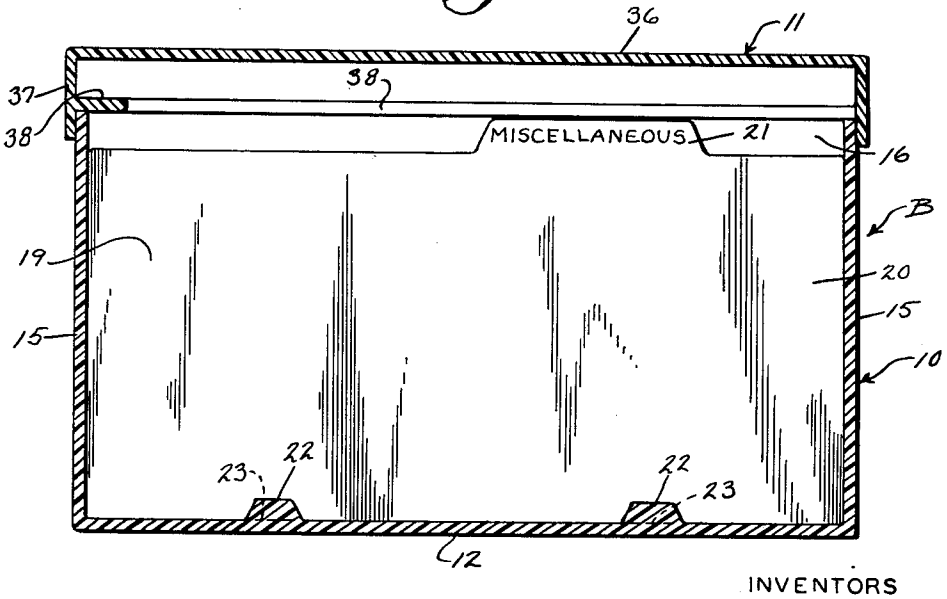

INVENTORS
GERALDINE K. BEEM
OWEN W. BEEM

BY

Wright & Wright

ATTORNEYS

United States Patent Office 3,164,430 Patented Jan. 5, 1965

3,164,430

HOME FILE BOX

Geraldine K. Beem and Owen W. Beem, both of 10727 W. York Place, Wauwatosa, Wis.

Filed May 7, 1962, Ser. No. 192,805
3 Claims. (Cl. 312—234.4)

This invention appertains to file boxes and cabinets, and more particularly to a novel file box especially designed for home use.

There has long been a need for a single unitary device for holding and keeping track of household bills, such as utility bills, insurance, rent, home and car payments, taxes etc. and the necessary appliances for facilitating the paying of such bills, in lieu of the usual practice of haphazardly keeping all bills in a drawer or drawers, and checkbooks, envelopes, stamps, pen and pencils in various other places around the home.

It is, therefore, one of the primary objects of our invention to provide a home file box having a separate compartment for the reception of bills (accounts payable), properly separated and classified by movable dividers properly labelled, and compartments for checkbooks, envelopes of different sizes, stamps and writing appliances etc. for facilitating the proper paying and mailing out of such bills.

Another salient object of the invention is to provide a home file box embodying a body with the various compartments therein, and a removable cover provided with inwardly directed flanges or ribs for limiting the downward movement of the cover on the box, the flanges or ribs constituting seats for removably receiving a large size checkbook with stubs, whereby upon removal of the cover from the body, the cover will effectively constitute a holder for the checkbook to permit the convenient filling out of the checks and stubs.

A still further object of the invention is to provide a home file box having the compartments so arranged therein as to permit a compact device to be had and so that the box can be conveniently molded from a desired plastic.

A still further important object of the invention is to provide a bill and bank file of a compact order that can be ornamented and finished in different colors to provide a pleasing appearance and to harmonize with home surroundings.

With these and other objects in view, the invention consists in the novel arrangement, formation and construction of parts, as will be hereinafter more specifically described and claimed, and illustrated in the accompanying drawings, in which drawings,

FIGURE 1 is a perspective view of the home bill and bank file with the cover partially removed, parts of the file being shown broken away and in section;

FIGURE 2 is a longitudinal sectional view through the bill and bank file with the cover thereon, the section being taken on the line 2—2 of FIGURE 1, looking in the direction of the arrows;

FIGURE 3 is a transverse sectional view through the complete file taken on the line 3—3 of FIGURE 2, looking in the direction of the arrows;

FIGURE 4 is a detail transverse sectional view taken on the line 4—4 of FIGURE 2, looking in the direction of the arrows and showing the compartments for rolls of stamps of different denominations and

FIGURE 5 is a detail fragmentary longitudinal sectional view through the body of the file box showing a slightly modified form of the invention.

Referring to the drawings in detail, wherein similar reference characters designate corresponding parts throughout the several views, the letter B generally indicates our

novel bill and bank file box, and the same includes a body 10 and a removable cover 11.

The box B can be formed from any desired materials and fabricated in any desired way; however, we prefer to mold the file box from a thermoplastic material and in different colors.

The body 10 comprises a bottom wall 12, front and rear walls 13 and 14 and side walls 15. Extending transversely across the body 10 are partition walls 16, 17 and 18. All of the partition walls 16, 17 and 18 are connected or molded with the side walls 15. The partition wall 16 is spaced a considerable distance from the front wall 13 and combines with the front wall 13 and portions of the side wall 15 to provide a front compartment 19. This constitutes the main compartment and this compartment receives bills to be paid. To classify the bills and keep the same in proper order, we provide a series of thin, flexible dividers 20, and these dividers are provided with upstanding tabs 21 having printed thereon, or otherwise affixed thereto, indicia indicating the types of bills. Thus, one divider can be provided with the label "House"; another "Automobile," another "Utilities" etc. In order to hold the dividers in proper position and in different spaced relation to one another, the bottom wall 12 of the body is provided with spaced upstanding longitudinally extending ribs 22. These ribs extend from the front wall 13 to the partition 16, and the upper faces of the ribs are provided with a series of notches 23, and these notches receive the lower edges of the dividers 20.

The partition 17 is arranged in close proximity to the partition 16 and forms therewith a compartment 24 for detachably receiving and holding a pocket checkbook or the like. The partition 18 is spaced from the partition 17 a greater distance than the distance between the partitions 16 and 17. The partitions 17 and 18 are connected by an arcuate top wall 25 and this constitutes a rest or holder for writing appliances, namely, pens and pencils.

The partition 18 is spaced a considerable distance from the rear wall 14 and combines therewith to form a second main compartment 26. Arranged within the compartment 26 and at one corner thereof are smaller compartments 27 and 28 for reception of rolls of stamps of different denominations. The compartments 27 and 28 are provided by forming a front partition 29 and an end partition 30 in spaced relation to the rear wall 14 and an end wall 15. A removable cover 31 is provided for the compartments 27 and 28 and the cover is provided with slits 32 and 33 through which the stamps from the rolls are threaded for ready use. The compartments 27 and 28 preferably terminate short of the upper edge of the body of the box so that as the stamps protrude through the slits 32 and 33 they will not be detached by the removable cover 11. The compartments 27 and 28 can be further defined by a bottom wall 34 which is connected with the rear wall 14, and an end wall 15 and partition walls 29 and 30.

As best illustrated in FIGURE 2, the portions of the box below the arcuate rest 25 and the wall 34 can open out through the bottom wall 12 of the body of the box and this is to facilitate the molding of the body of the box and lighten the weight thereof.

The compartment 26 is provided for receiving envelopes of different sizes and long envelopes can be placed in front of the compartment 26 and in front of the compartments 27 and 28 for the stamps. Shorter envelopes are placed in the rear of the compartment 26 and alongside of the compartments for the stamps.

In FIGURE 5 a slightly modified form of the invention is shown and in this form, the space between the partitions 17 and 18 does not open out through the bottom of the box, and I provide a removable cover 35 for spanning the partitions 17 and 18, and this cover constitutes

a rest for pens nad pencils and corresponds to the arcuate bridging wall 25. The space below the removable cover 35 can be utilized for various purposes, such as a secret compartment for coins or paper money.

The cover 11 includes a flat top wall 36 and a depending skirt 37. The inner face of the skirt 37, preferably at three points, is provided with inwardly directed supporting flanges or ledges 38. These flanges or ledges 38 are spaced from the lower edge of the skirt and from the top wall 36. These flanges or ledges limit the downward movement of the cover on the body of the box and provide means for supporting and holding a checkbook 39, shown in dotted lines in FIGURE 2 of the drawing. This checkbook is of the portfolio type, namely, constituting a series of pages with three checks and stubs on each page. Thus, the cover 11 houses and carries the checkbook. The checkbook can easily be removed from and replaced in the cover by flexing the same and sliding the book under the flanges or ledges. With the checkbook associated with the cover and when it is desired to write checks, the cover can be removed and placed in an inverted position on a surface, and the checks and their stubs can be filled out with the checkbook still in the cover.

If desired, an account book can be carried by the cover in lieu of the large size checkbook, in which instance the pocket checkbook in compartment 24 can be utilized for paying bills.

Changes in details may be made without departing from the spirit or the scope of this invention, but what we claim as new is:

1. A home bill and bank file comprising a body and a removable cover, said body including a plurality of transversely extending partitions, said partitions being grouped adjacent to the center of the body defining a front large compartment and a rear large compartment and center small compartments, said front large compartment defining a space for bills and statements and having formed on its bottom a pair of spaced longitudinally extending ribs provided with transverse slits, said rear compartment having in one corner thereof small compartments for the

reception of stamps of different denominations, a removable cover for the stamp compartments, said remaining portion of said rear large compartment being adapted to receive envelopes of different sizes, and certain of said partitions being bridged by a transversely extending arcuate wall defining a rest for pens and the like, and relatively thin flexible separators in said front large compartment having their lower edges detachably fitted and held in said slits, said separators bearing indicia indicating classes of bills.

2. A home bill and bank file as defined in claim 1, wherein said rest is so constructed and arranged as to be removable to provide access to a compartment defined by said partitions.

3. A home bill and bank file comprising a body and a removable cover, said body including a plurality of transversely extending partitions, said partitions being grouped adjacent to the center of the body defining a front large compartment and a rear large compartment and center smaller compartments, said front large compartment defining a space for bills and statements and having formed on its bottom a pair of spaced longitudinally extending ribs provided with transverse slits, said cover constitituting a holder and back for a checkbook whereby said cover with said checkbook can be laid in an inverted position on a surface to permit the filling out of the checks and stubs, and relatively thin flexible separators in said front large compartment having their lower edges detachably fitted and held in said slits, said separators bearing indicia indicating classes of bills.

References Cited in the file of this patent

UNITED STATES PATENTS

1,644,830	Henderson	Oct. 11, 1927
1,657,277	O'Connor	Jan. 24, 1928
1,901,861	Baker	Mar. 21, 1933
2,522,768	Wiepert	Sept. 19, 1950
2,701,635	Mills	Feb. 8, 1955
2,725,244	Friday	Nov. 29, 1955
2,848,292	Lewis	Aug. 19, 1958