(No Model.) 3 Sheets—Sheet 1.

H. D. MUGERDITCHYAN.

COIN OPERATED VENDING DEVICE.

No. 455,948. Patented July 14, 1891.

Fig. 1.

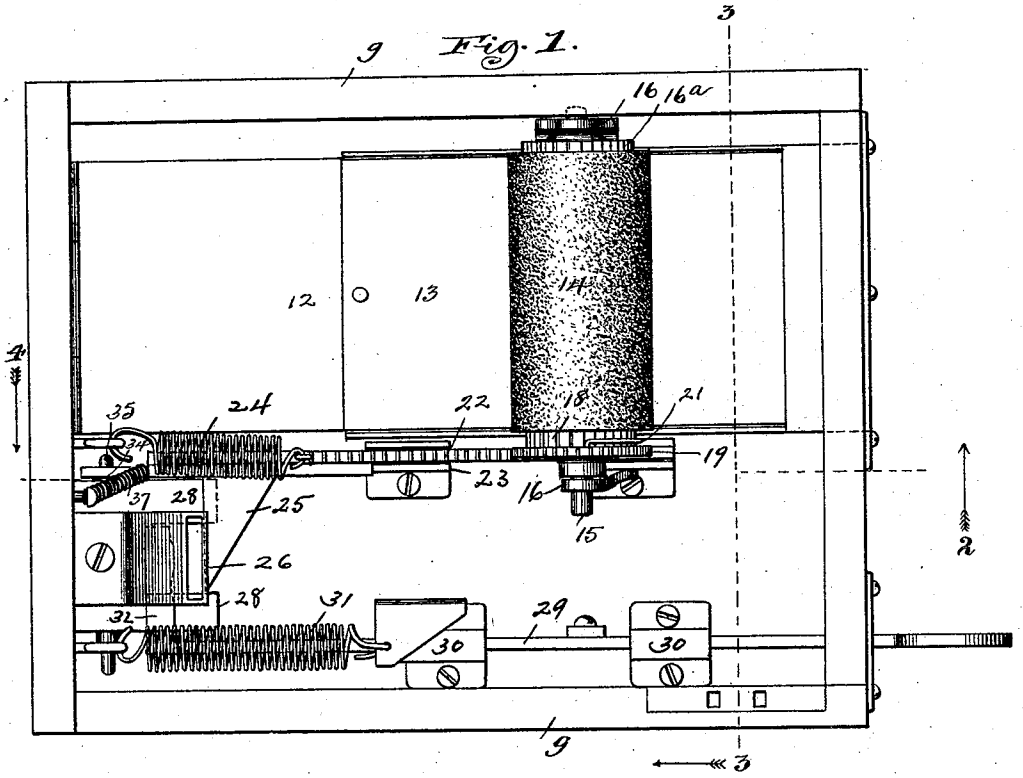

Fig. 2.

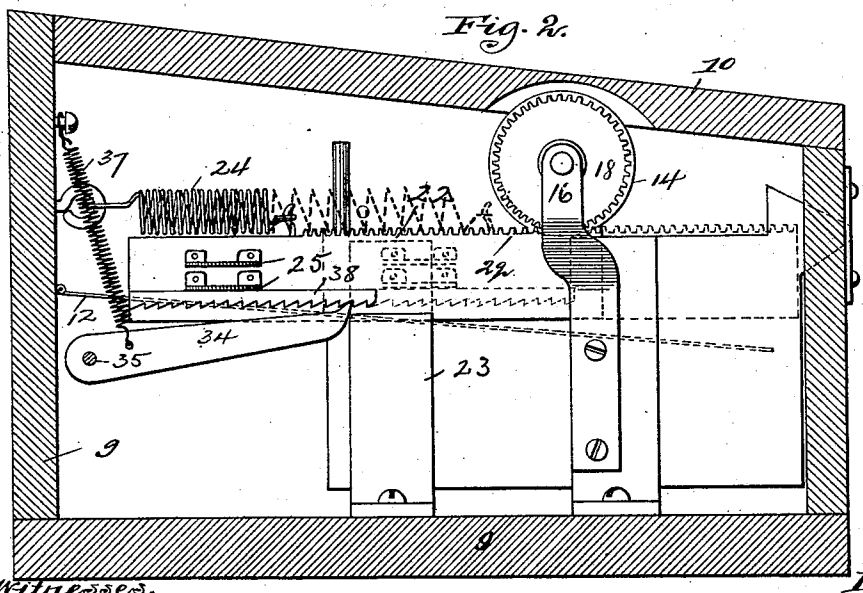

Witnesses,
S. G. Mann,
Frederick F. Goodwin

Inventor,
H. D. Mugerditchyan
By Offield & Towle
Att'ys.

THE NORRIS PETERS CO., PHOTO-LITHO., WASHINGTON, D. C.

(No Model.) 3 Sheets—Sheet 2.

H. D. MUGERDITCHYAN.

COIN OPERATED VENDING DEVICE.

No. 455,948. Patented July 14, 1891.

Fig. 3.

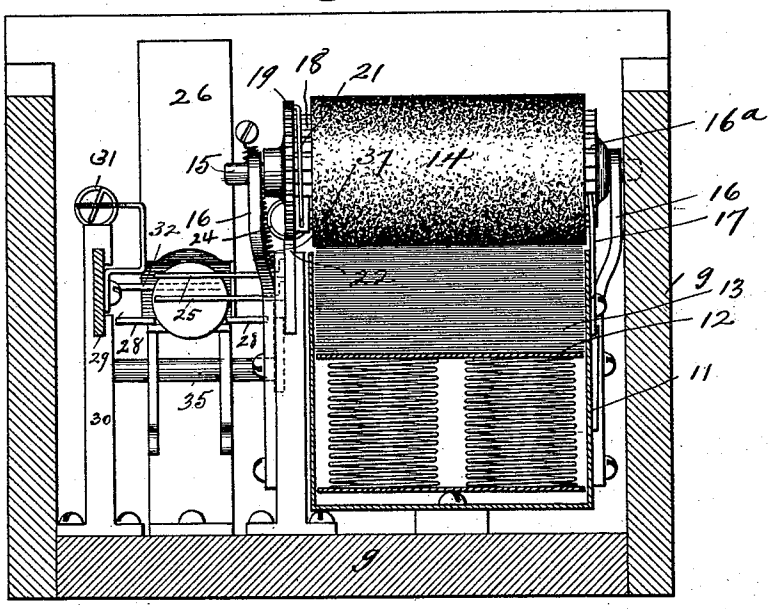

Fig. 4.

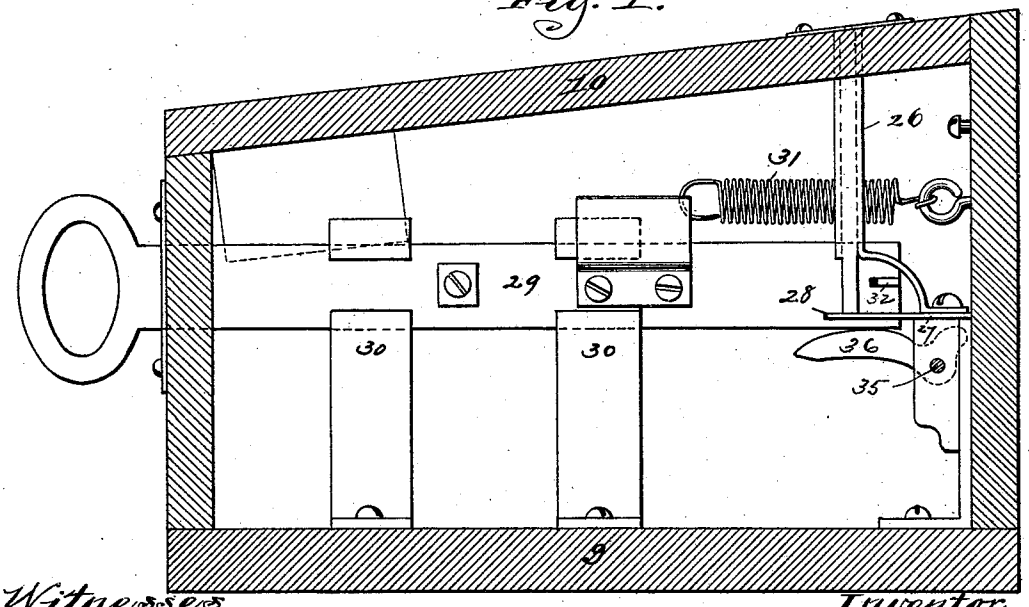

Witnesses
D. S. Mann,
Frederick P. Goodwin

Inventor,
H. D. Mugerditchyan
By, Offield & Towle
Atty's.

THE NORRIS PETERS CO., PHOTO-LITHO., WASHINGTON, D. C.

(No Model.) 3 Sheets—Sheet 3.

H. D. MUGERDITCHYAN.

COIN OPERATED VENDING DEVICE.

No. 455,948. Patented July 14, 1891.

Fig. 5.

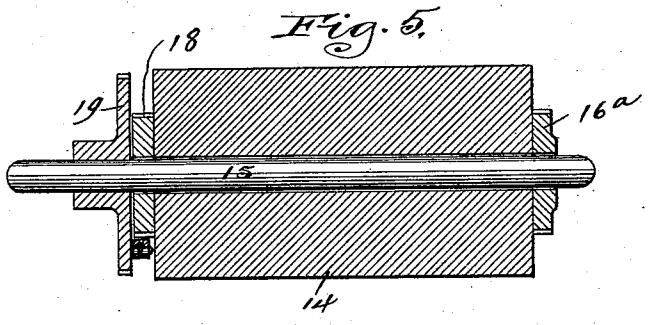

Fig. 6.

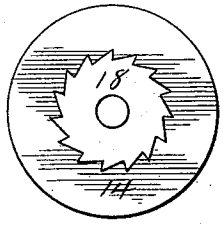

Fig. 7.

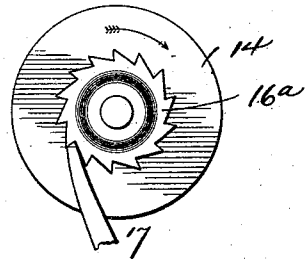

Fig. 8.

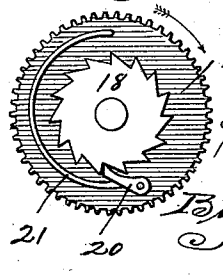

Witnesses,
D. S. Mann.
Frederick F. Goodenow

Inventor,
H. D. Mugerditchyan
By, Offield & Towle
Attys.

THE NORRIS PETERS CO., PHOTO-LITHO., WASHINGTON, D. C.

UNITED STATES PATENT OFFICE.

HAIG D. MUGERDITCHYAN, OF CHICAGO, ILLINOIS.

COIN-OPERATED VENDING DEVICE.

SPECIFICATION forming part of Letters Patent No. 455,948, dated July 14, 1891.

Application filed January 2, 1891. Serial No. 376,477. (No model.)

To all whom it may concern:

Be it known that I, HAIG D. MUGERDITCHYAN, a subject of the Sultan of Turkey, residing in Chicago, Illinois, have invented certain new and useful Improvements in Coin-Operated Vending Devices, of which the following is a specification.

My invention relates to that class of vending apparatus which are held from operation by devices which can only be released by the insertion of a coin of a certain predetermined size, and more especially to improvements in such coin-controlled apparatus as are intended for use in delivering from a closed receptacle or box sheets of paper, such as accident-insurance policies, tickets, postal-cards, stamped envelopes, and the like.

My invention consists in the devices and combinations of devices hereinafter described and claimed.

In the accompanying drawings, Figure 1 is a plan view. Fig. 2 is an elevation on the line 2 2 of Fig. 1, looking in the direction of the arrow 2. Fig. 3 is a transverse sectional elevation to the left of the line 3 3 of Fig. 1. Fig. 4 is a sectional elevation on the line 4 4 of Fig. 1 and looking in the direction indicated by the arrow 4. Figs. 5 to 8, inclusive, are detail views of a feed-roller and parts of its operating mechanism.

In the drawings, 9 indicates a box or casing having a removable cover 10. Within the box are the vertically-placed guide-plates 11, between which moves the spring-supported follower 12, on which are placed the sheets 13, which may be postal-cards, tickets, insurance-policies, or other articles, the sheets being supported upon each other and normally held up by the spring-pressed follower, so that the upper one is maintained in contact with a delivery-roller 14, loosely mounted upon an axle 15, journaled in brackets 16. Upon the outer end of roller 14 is fixed a ratchet-wheel 16^a, engaged by a pawl 17, which prevents the backward rotation of the roller. (See Figs. 3 and 7.) Upon the inner end of the roller is secured a ratchet-wheel 18, and secured upon the axle is a ratchet-wheel 19, carrying a pivoted pawl 20, normally carried to engage the teeth of ratchet-wheel 18 by means of the spring 21.

In the operation of delivering, the ratchet 19 is rotated in the direction indicated by the arrow in Fig. 8, and is locked with the roller by the pawl 20, so as to cause the forward rotation of said roller and the delivery of the topmost sheet. In the reverse movement of the ratchet-wheel 19 the roller is locked against rotation by the pawl 17.

The means for rotating the delivery-roll comprise a slidable rack-bar 22, moving in ways formed in the brackets 16 23. The rack-bar 22 is normally retracted by a spring 24, and it carries on its side toward its rear end the angular arms 25, the rear edges of which lie parallel to the plane of the coin-chute 26, the upper end of which registers with a suitable coin-aperture in the lid of the box. A plate 27 has bifurcations 28 thereof projected beneath the lower end of the coin-chute and arrests the coin as it falls when the coin is of the proper size, but allows a coin of less size to fall through.

29 is an operating-plunger which slides in ways formed in the standards 30. The forward end of the plunger projects outside the box or casing, and a spring 31, connected at one end to the plunger and at the other to the casing, normally tends to retract the plunger. This plunger has projected from its side an arm 32, which when the plunger is retracted lies in a plane parallel to the opening in the chute and on the opposite side thereof from the arms 25. When a coin of proper size is deposited in the chute, it comes to rest upon the bifurcations 28 between the arms 25 and 32, and a pull on the plunger 29 will clamp the coin between said arms, thereby locking the rack-bar and plunger together. The forward movement of the rack-bar rotates the roller by means of the ratchet mechanism before described, and the roller delivers the topmost of the sheets through a delivery-aperture in the front of the casing. In order to release the coin I provide a stop to arrest the rack-bar before the completion of the return movement, which is effected by the springs. This stop mechanism comprises a dog 34, carried by a rock-shaft 35, which supports at its opposite end a cam-lever 36. In the normal condition of the parts the dog 34 and cam 36 project beneath and in the vertical plane of the rear ends of the rack-bar and operating-lever, respectively. A spring 37,

connected to the dog 34, maintains the forward end of the dog in engagement with the teeth of a rack 38 on the rack-bar. On the forward movement this dog slides over the rack-teeth 38; but at the close of the movement and when the plunger commences to move back the rack-bar is arrested by the engagement of the dog and the operating-plunger moving on releases the coin. When the operating-plunger engages the cam, it causes the release of the dog and permits the spring to return the rack-bar to its normal position.

I do not intend to limit my invention to the precise structural features or arrangement of parts illustrated in the drawings—for example, the form and location of the springs described might be varied. Instead of employing the rack 38, the dog 34 might be made to engage the end of the rack-bar at the close of its forward movement and hold it against return until said dog is withdrawn by the engagement of the operating-plunger with the cam. I prefer to arrest the rack-bar at the limit of its forward movement to permit the operating-plunger to return, so as to disengage the coin, as by this means more than a single operation of the roller for the delivery of a sheet is prevented.

I claim—

1. In a coin-operated vending device, the combination, with sheet-delivery mechanism, of a slidable bar adapted to actuate the delivery mechanism and having a portion of its surface corresponding to the length of its movement provided with rack-teeth, a spring to retract said bar, an operating-plunger adapted to be locked to the bar by the insertion of a coin, a rock-shaft having on one end thereof a dog to engage the slidable bar and upon the other end a cam located in the path of the operating-plunger, and a spring normally tending to force the dog into engagement with the bar, whereby the slidable bar is dogged at all times during its forward movement and is released upon the backward movement of the operating-plunger, either before or after the completion of a full stroke, substantially as described.

2. In a coin-operated sheet-vending apparatus, the combination, with the inclosing casing, of vertically-disposed guide-plates therein, a spring-pressed follower upon which the sheets are superposed, a delivery-roller against which the sheets are maintained, a ratchet mechanism connected with said roller and adapted to permit the rotation of the latter in one direction only, a sliding rack-bar in gear with the ratchet mechanism, and an operating-plunger adapted to be locked with the rack-bar by the insertion of a coin, and means for arresting the backward movement of the rack-bar to permit the release of the coin and for releasing said bar after the release of the coin, substantially as described.

3. In a coin-controlled sheet-delivery apparatus, a spring-supported follower upon which the sheets are superposed, a delivery-roller mounted above the sheets and adapted to engage them, said roller being loosely mounted on its axle, ratchet mechanism secured to each end of said roller, a pawl engaging one of said ratchets and adapted to prevent the backward rotation of the roller, and a driving-gear secured with the axle and adapted to be locked with the roller to secure its forward rotation, a rack-bar enmeshed with the driving-gear, a spring to retract said rack-bar, and an operating-plunger adapted to be locked with the rack-bar by the insertion of a coin, subtantially as described.

HAIG D. MUGERDITCHYAN.

Witnesses:
C. C. LINTHICUM,
N. M. BOND.