Aug. 14, 1928. 1,680,614

E. H. HILL ET AL

WARP KNITTING MACHINE

Filed July 28, 1924 3 Sheets-Sheet 1

Fig. 1.

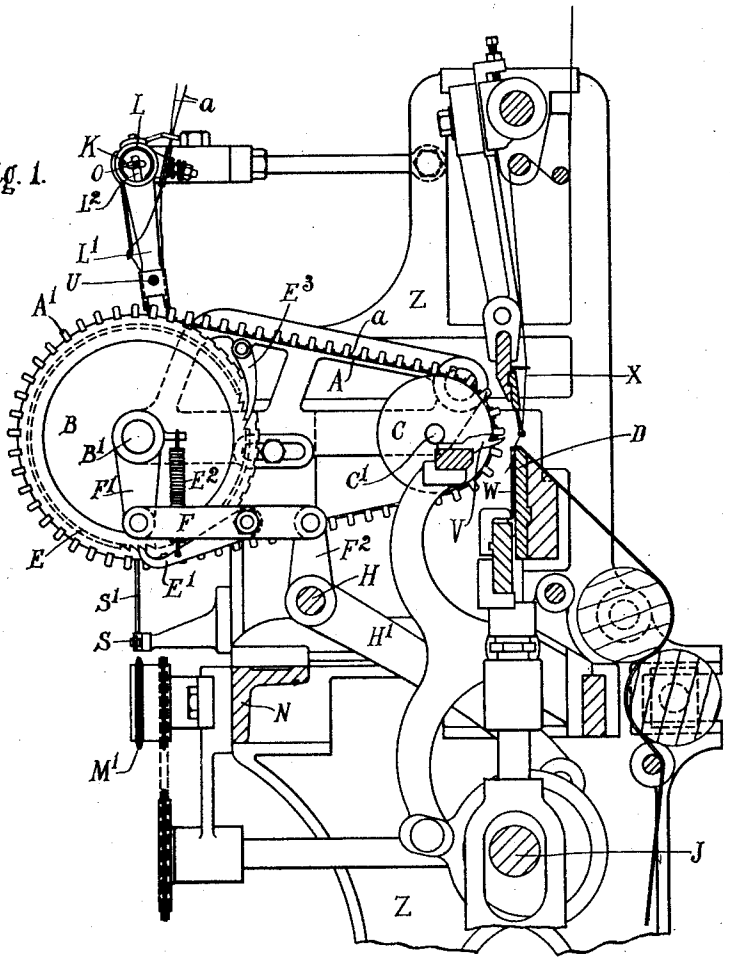

Fig. 2.

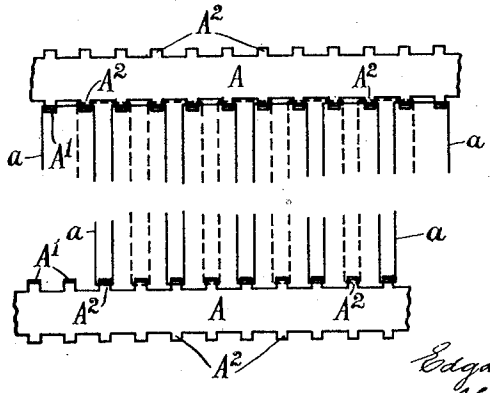

Inventors:
Edgar H. Hill, and
Henry Hawkins.
by Herbert W. Jenner
Attorney.

Aug. 14, 1928. 1,680,614

E. H. HILL ET AL

WARP KNITTING MACHINE

Filed July 28, 1924 3 Sheets-Sheet 2

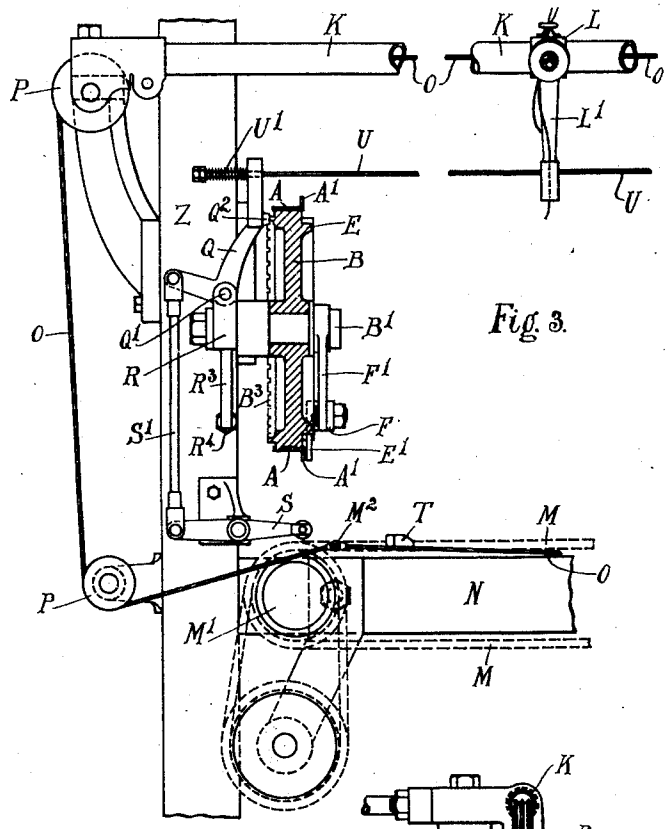

Fig. 3.

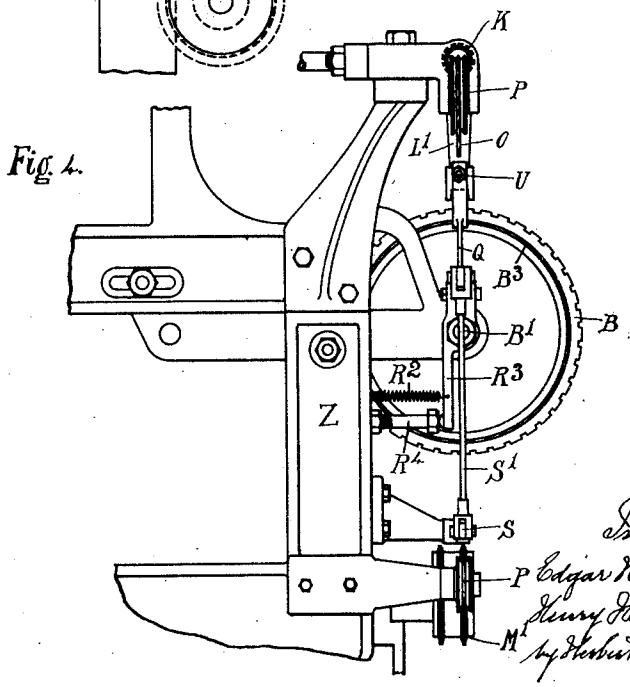

Fig. 4.

Inventors
Edgar H. Hill, and
Henry Hawkins
by Herbert W. Penner
Attorney.

Aug. 14, 1928. 1,680,614

E. H. HILL ET AL

WARP KNITTING MACHINE

Filed July 28, 1924 3 Sheets-Sheet 3

Fig. 5.

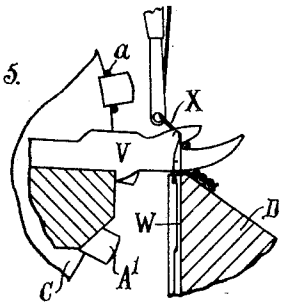

Fig. 6.

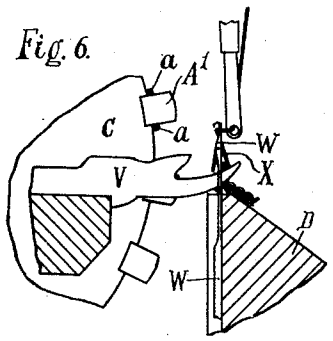

Fig. 7.

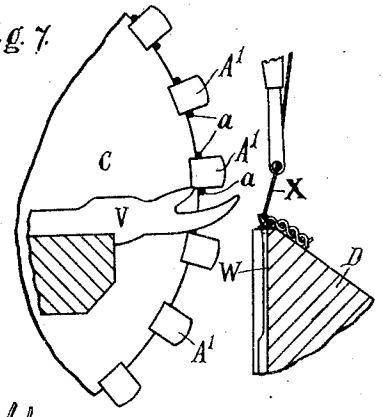

Fig. 8.

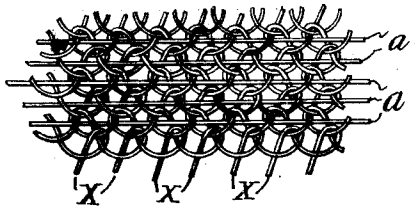

Inventors:
Edgar H. Hill, and
Henry Hawkins
by Herbert W. Prince.
Attorney.

Patented Aug. 14, 1928. 1,680,614

UNITED STATES PATENT OFFICE.

EDGAR HERBERT HILL AND HENRY HAWKINS, OF NOTTINGHAM, ENGLAND.

WARP-KNITTING MACHINE.

Application filed July 28, 1924, Serial No. 728,731, and in Great Britain August 3, 1923.

This invention relates to improvements in warp knitting machines in which provision is made for introducing weft-threads into the fabric as it is produced, and its object is to provide better means for this purpose.

According to this invention, lengths of weft-thread extending from selvedge to selvedge are laid some time before they are required for incorporation in the fabric, on an arrangement which is adapted to feed them close up to the crocheting needles ready to be transferred to the latter in succession without loss of time in the process of knitting each course.

The weft-thread laying apparatus is quite independent of the crocheting mechanism, the process of laying the weft thread can therefore be carried on continuously instead of intermittently, and there is consequently more time to perform this operation. The process of crocheting does not on the other hand have to be interrupted in order to lay in the weft-threads, as the previously laid wefts can be instantaneously transferred to the needles as required, and the machine can be run at the same speed as when making ordinary work.

Referring to the accompanying drawings,

Fig. 1 is a vertical cross section of a warp knitting machine to which our invention is applied.

Fig. 2 is a plan of part of the two weft holding chains or bands showing the disposition of the weft-thread or threads thereon.

Fig. 3 is a rear elevation, and

Fig. 4 an end elevation showing the weft-thread laying mechanism.

Figs. 5—6 and 7 are vertical cross sections illustrating the action of the thread carriers when transferring the weft-thread lengths to the needles.

Figs. 2, 5—6 and 7 are drawn to a larger scale than the remaining figures.

Fig. 8 is a diagram showing the threads of a portion of the fabric.

Like letters indicate parts throughout the drawing.

In carrying out this invention, an endless chain or band A is employed at each end of the machine (see Fig. 1) and these bands or chains which are disposed transversely to the length of the machine, are each carried on rear and front sprocket wheels or pulleys B and C.

These sprocket wheels or pulleys B and C are mounted on axles B′ C′ secured to the fixed frame Z, the front pulleys C being disposed as close up to the ends of the needle-bar of the machine as is possible, whilst the rear ones B, are set a distance back which is determined by the length of the endless chains or bands A employed.

The latter are provided with outwardly projecting fingers A′ disposed at regular intervals, on which lengths of weft thread *a* can be laid as shown in Fig. 2, and provision is made for advancing said chains or bands A step by step, so as to feed the weft-thread lengths close up to the needles W as required.

This may be effected by providing each of the rear sprocket wheels or pulleys B (only one of which is shown) with a ratchet wheel E, and advancing said wheels by means of pawls E′ actuated by any suitable mechanism.

As shown in Fig. 1 of the drawings, each pawl E′ is carried by a link F jointed to two arms F′ F^2, one F′ of which is loosely mounted on the axle B′ of the wheel B, whilst the other is secured on a rocking shaft H. The latter is actuated by means of a cam lever H′ thereon, provided with an anti-friction roller running on a cam on the main cam-shaft J. The pawl E′ is held up to its work by means of a spring E^2 and return movement of the ratchet wheel E is prevented by a second pawl E^3.

When a flat flexible metal band A is employed as shown, it is provided with lateral projections A^2 (see Fig. 2) disposed at regular intervals, and flanges are provided on the periphery of the sprocket wheels or pulleys B and C which carry the same, which flanges are cut so as to engage with said projections and afford a positive drive. When a chain is adopted, ordinary sprocket wheels are employed.

Running horizontally along the back of the machine above the rear sprocket wheels B described, is a longitudinal rail K which is preferably tubular (see Figs. 1—3 and 4), and mounted thereon is a travelling carriage L provided with a weft-thread laying arm L′. The carriage L is reciprocated backwards and forwards along the rail K from one end of the machine to the other, and the thread laying arm L′ thereon, which is furnished with a weft-thread supply, is actuated at the end of each of such movements so as to carry the thread round one of the fingers A′ on the corresponding endless chain or band A, and which fingers then hold

it in the required form, that is, in straight lengths which can by the forward movement of the said chains or bands A be fed in this form close up to the needles.

The travelling carriage L described is as shown actuated by means of an endless driving chain M (see Fig. 3) which chain is carried over sprocket wheels or pulleys M' disposed at the respective ends of the rear longitudinal rail N of the machine. The carriage L is connected to a point M^2 in the driving chain M, by means of an endless cable O, which is carried over pulleys P at the respective ends of the machine and through the interior of the tubular rail K. One of the sprocket wheels M', is revolved continuously by any approved driving mechanism, whilst the cable O is connected to the carriage L by means of a part L^2 on the latter (see Fig. 1) extending through a longitudinal opening which is provided in the underside of the tubular rail K. With this arrangement a movement which corresponds in length to that of the point M^2 in the chain M, is imparted to the carriage L.

At the completion of each reciprocating movement of the weft thread laying carriage L, provision is made for rocking the thread laying arm L' so as to carry the weft thread round fingers A' on the respective endless chains or bands A alternately.

The weft thread supply is preferably taken from above, and in order to reduce the speed at which it is necessary for the carriage L to travel, two distinct threads instead of one are preferably laid at one and the same time in the manner shown in Fig. 2, one weft thread being there indicated by a full and the other by a dotted line.

It will be understood from Fig. 2, that there are two straight lengths of weft thread to each finger A' on the endless chains or bands A, and that it is therefore only necessary to advance the chains or bands A one half the space between two fingers A', in order to bring the said thread lengths one at a time into the required position ready for transfer to the needles.

It must also be understood that when two weft-threads are laid simultaneously, the chains or bands A must be advanced twice every time the carriage L makes one traversing movement as it then lays two threads, and that provision has to be made for regulating the oscillating movements of the thread laying arm L' to suit these peculiar conditions.

In the arrangement shown, the thread laying arm L' which is provided with a forked end adapted to lay two weft threads on the chains or bands A at one and the same time, runs on a guide rod U which is carried by bell-crank levers Q at each end of the machine. The levers Q are each pivoted at Q' to a boss R which is mounted loosely on the same axle B' as the corresponding sprocket wheel or pulley B. As a result of this arrangement, the levers Q can each move angularly with their respective wheels B. and can further be moved to and from and thus be connected to and released from the latter.

Normally a tooth Q^2 on each lever Q is held in engagement with a toothed rib B^3 on the outer side of the wheel B. by means of a spring V' on the outer end of the guide rod U, and in this case the levers Q, the guide rod U and the free end of the weft-thread laying arm L' are connected to and follow the movement of the wheel B and chain or band A. When the tooth Q^2 on the lever Q is however withdrawn out of engagement with the toothed rib B^3 which has the same number of teeth as the wheel, the said lever is returned to its zero position. This is effected by means of a spring R^2, which is connected to a tail R^3 on the boss R which carries the lever Q. and which spring always moves said tail up to a stop R^4.

In order to lay the weft thread on the endless chains or bands A as shown in Fig. 2, the lever Q at one end is released from the corresponding wheel B every time the latter has moved a full tooth forward, whilst the corresponding lever Q at the other end, is only released from its wheel B, every time the latter has been advanced two full teeth.

This result is obtained by connecting each of the levers Q to a lever S disposed near the driving chain M by means of a link S', and providing studs or lifts T (see Fig. 3) on said chain M to act on the levers S. Two of these lifts T are provided to act on the lever S at one end of the machine, and one to act on the corresponding lever S at the other end, and as a result one lever is released and returns to zero every time the bands A have moved forward a distance of one tooth and delivered two weft thread lengths, whilst the other is released and returns to zero every time the chains or bands A have moved forward two teeth and delivered four weft-thread lengths.

The lengths of weft-thread *a*, are transferred from the endless bands described, by means of specially shaped thread carriers V which are ordinarily employed in this class of machine but of a different shape and for a different purpose. In this case the thread carriers V have forked ends and the transfer is effected by a short movement of the same owing to the fact that the lengths of weft thread *a* are fed close up to the needles W. ready for this operation.

The transfer is effected as follows:—On the completion of each course, the next weft-thread length *a* is moved into the front of the thread carriers V as shown in Fig. 7 and the latter are then moved forward

so as to take it in their forked ends from the fingers A′ on the endless chains or bands A, and move it to a point in front of the needles W during the time the latter are in their lower position. The needles W then rise as shown in Fig. 5, and as a result the weft-thread *a* is then located between the needles W and the warp threads X, after which the latter are lapped on the needles as shown in Fig. 6, and the course knitted, the thread carriers V being withdrawn to permit of this operation. With this system of working it must be understood that the weft-thread *a* runs straight across from one selvedge to the other, and is secured by every loop in the course in which it is embodied. It is thus more securely incorporated in the work than is usually the case.

What we claim as our invention and desire to secure by Letters Patent is:—

1. The combination, with a pair of endless conveyers provided with yarn holding fingers, and means for moving the conveyers step by step; of mechanism for looping two separate threads of yarn around the said fingers to form two series of parallel weft threads, said mechanism comprising a guide rail, a yarn carriage slidable on the guide rail and provided with a thread laying arm, means for sliding the carriage and arm longitudinally of the guide rail and crosswise of the conveyers, and means for rocking the said arm laterally at intervals to loop each yarn thread alternately over one finger of one conveyer and over two fingers of the other.

2. The combination, with a pair of endless conveyers provided with yarn holding fingers, and means for moving the conveyers step by step; of mechanism for looping two separate threads of yarn around the said fingers to form two series of parallel weft threads, said mechanism comprising a guide rail, a yarn carriage slidable on the guide rail and provided with a thread laying arm, means for sliding the carriage and arm longitudinally of the guide rail and crosswise of the conveyers, and a rod and pivoted levers for rocking the said arm laterally, said levers being operatively connected with the said conveyers and being moved pivotally by them at predetermined intervals to loop each yarn thread alternately over one finger of one conveyer and over two fingers of the other conveyer.

3. The combination, with a pair of endless conveyers provided with yarn holding fingers, and means for moving the conveyers step by step; of mechanism for looping two separate threads of yarn around the said fingers to form two series of parallel weft threads, said mechanism comprising a guide rail, a yarn carriage slidable on the guide rail and provided with a thread laying arm, an endless driving device arranged parallel to the guide rail, intermediate driving devices operatively connecting the endless driving device with the said yarn carriage to slide it back and forth on the guide rail, lever mechanisms for rocking the thread laying arm laterally at the end portions of its travel, and means carried by the said endless driving device for alternately operating one of the said lever mechanisms once and the other lever mechanism twice, to loop each yarn thread alternately over one finger of one conveyer and over two fingers of the other conveyer.

4. The combination, with a pair of endless conveyers provided with yarn holding fingers, and means for continually advancing the conveyers step by step in one direction only; of a needle bar and needles arranged adjacent to the delivery ends of the said conveyers, thread guides for engaging with the weft threads on the conveyers, a thread feeding arm operating to lay the threads on the yarn holding fingers, and means for reciprocating the thread guides to transfer the weft threads on the said fingers from a position in front of the said needles to a position behind them.

5. A combination of parts as set forth in claim 4, the said thread guides being provided with forked ends for engaging the weft threads, and having relatively short reciprocating movements imparted to them.

In witness whereof we have hereunto set our hands.

EDGAR HERBERT HILL.
HENRY HAWKINS.