United States Patent [19]

Watanabe

[11] **Patent Number: Des. 298,129**

[45] **Date of Patent: ** Oct. 18, 1988**

[54] **COMBINATION MOBILE, PORTABLE CELLULAR HANDSET RADIO TELEPHONE AND SUPPORT CASE**

[75] Inventor: **Katsuhito Watanabe**, Tokyo, Japan

[73] Assignee: **OKI Electric Industry Co., Ltd.**, Tokyo, Japan

[**] Term: **14 Years**

[21] Appl. No.: **84,940**

[22] Filed: **Aug. 13, 1987**

[30] **Foreign Application Priority Data**

Feb. 17, 1987 [JP] Japan 62-5465

[52] **U.S. Cl.** **D14/53**; D14/64; D14/59; D14/52; D14/68; D14/70; 379/433

[58] **Field of Search** D14/52, 53, 57, 63, D14/64, 62, 66, 68, 92; 379/61, 62, 419, 428, 433, 440, 444; D21/111; D18/12; 455/89, 90; 446/141, 142

[56] **References Cited**

U.S. PATENT DOCUMENTS

D. 256,234	8/1980	Fukushima et al.	D14/53
D. 256,235	8/1980	Fukashima et al.	D14/53
D. 262,207	12/1981	Kaczkas	D14/64 X
D. 277,164	1/1985	Bevilagar	D14/53
D. 277,179	1/1985	Specht	D14/53
D. 278,626	4/1985	Takagi et al.	D14/53
D. 279,372	6/1985	Boha et al.	D14/52
D. 292,206	10/1987	Watanabe	D14/64 X
D. 292,513	10/1987	Gilberton	D14/64 X
4,646,344	2/1987	Goldhorn et al.	379/445
4,677,654	6/1987	Login et al.	379/59 X

OTHER PUBLICATIONS

Dec. 1985 issue Personal Communications Technology; at p. 17; Showing of American Cellular Telephones.

Motorola Flyer Sheet; showing of Dyna T-A-C 6000X/Dyna T-A-C 6000 Cellular Transportable ® Accessory.

Radio Shack 1986 catalog Fall 1985; ©1985; at p. 77--Cellular Phone for Car.

Primary Examiner—Horace B. Fay

Attorney, Agent, or Firm—Wenderoth, Lind & Ponack

[57] **CLAIM**

The ornamental design for a combination mobile, portable cellular handset radio telephone and support case, as shown and described.

DESCRIPTION

FIG. **1** is a front, top and left side perspective view of a combination mobile, portable cellular handset radio telephone and support case showing my new design in cradled relationship;

FIGS. **2** and **3** are respectively front and rear elevational views thereof;

FIGS. **4** and **5** are respectively top and bottom plan views thereof;

FIGS. **6** and **7** are respectively left and right elevational views thereof;

FIG. **8** is a sectional view taken on line VIII—VIII in FIG. **4** with interior construction omitted;

FIG. **9** is a left side rear and top perspective view of a second embodiment thereof, the differences vis-a-vis the first embodiment being the addition of a carriage handle and an antenna to the support case;

FIG. **10** is a front, bottom and left side perspective view of the handset shown alone; and,

FIG. **11** is a perspective view thereof as of FIG. **1** of a third embodiment showing the support case with (**1**) extended antenna, and (**2**) virtually upright carriage handle and a perspective view of the handset, the differences vis-a-vis the handset as shown in FIG. **1** being (**1**) evidence in the display panel and on sundry pushbutton tops, of conventional letters, numerals, words and symbols of in-service nature.

The broken line showing of the numerals in the display panel of the handset in FIG. **11** is for illustrative purposes only and forms no part of the claimed design.

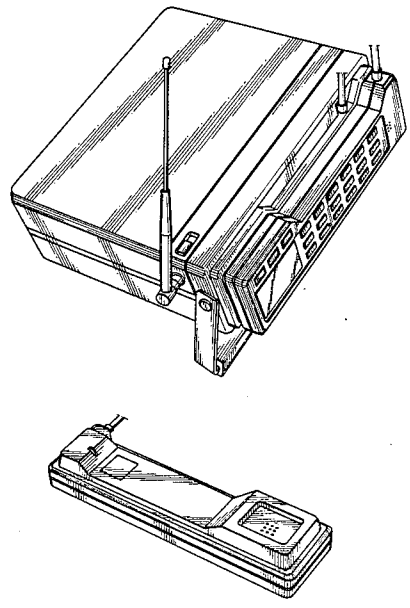

Fig. 1

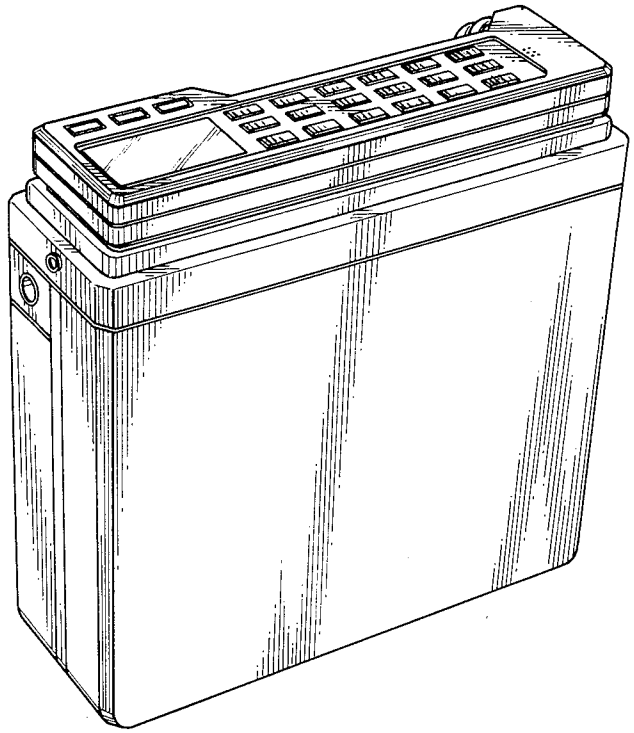

Fig. 2

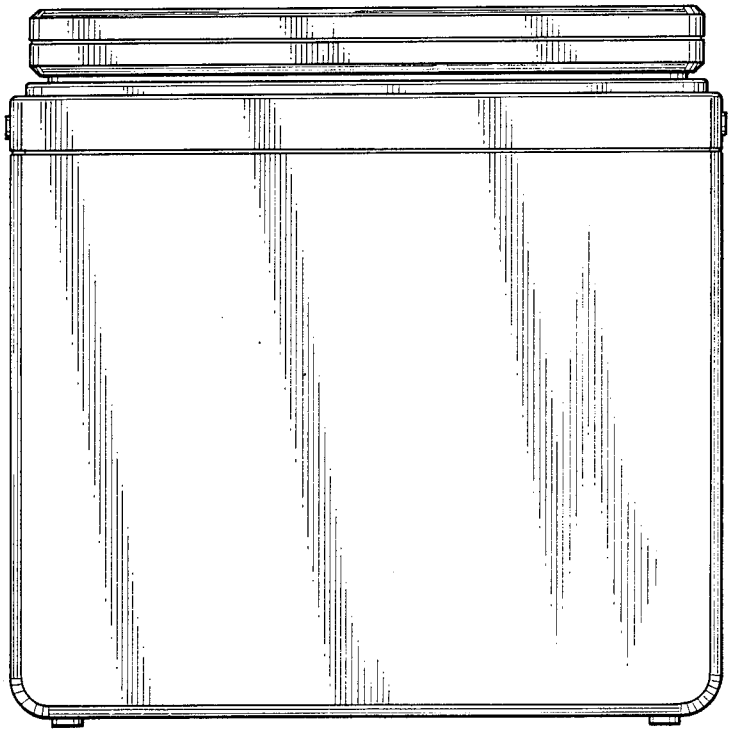

Fig. 3

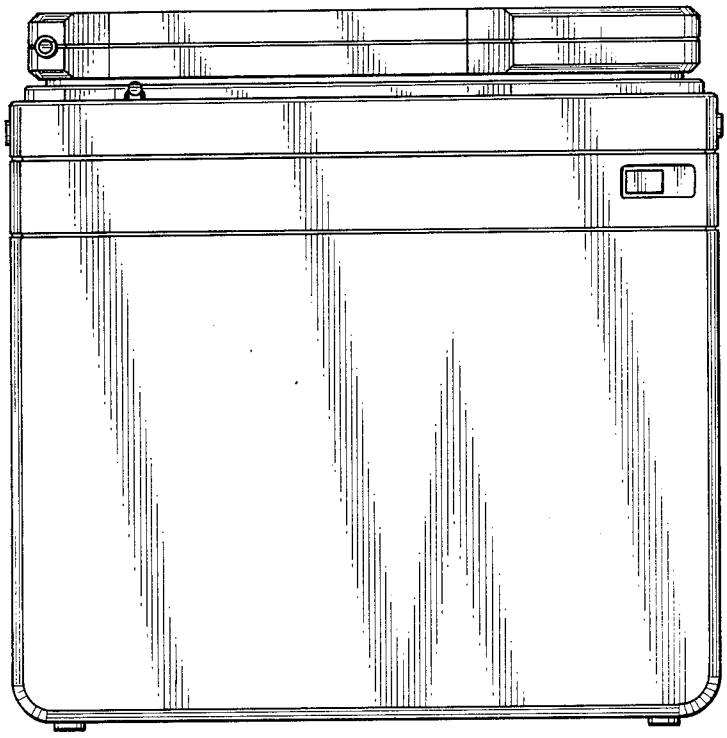

Fig. 4

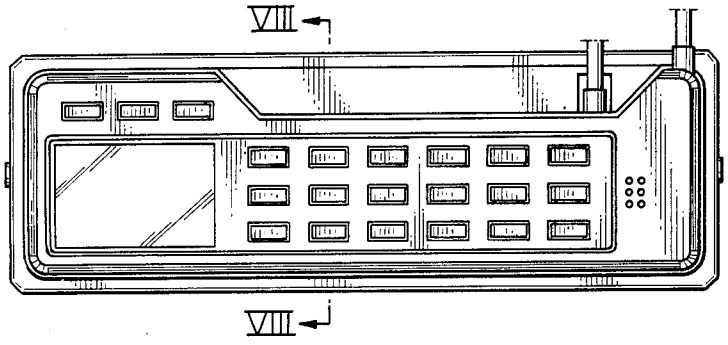

Fig. 5

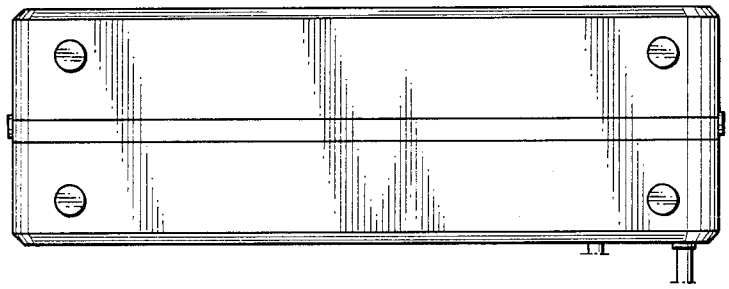

Fig. 8

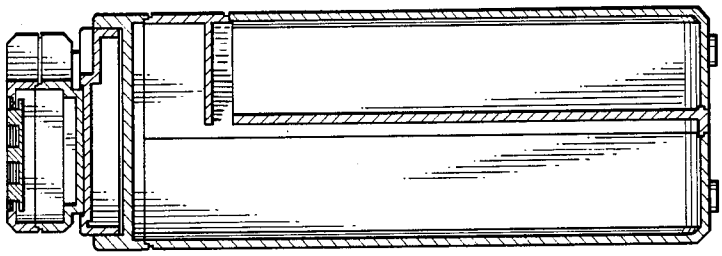

Fig. 7

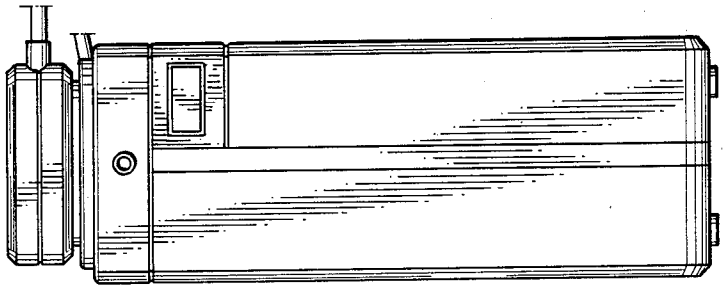

Fig. 6

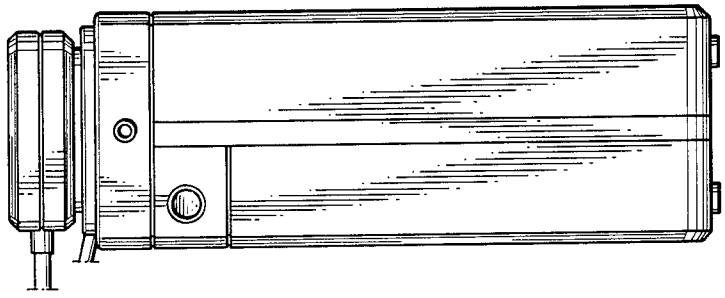

Fig. 9

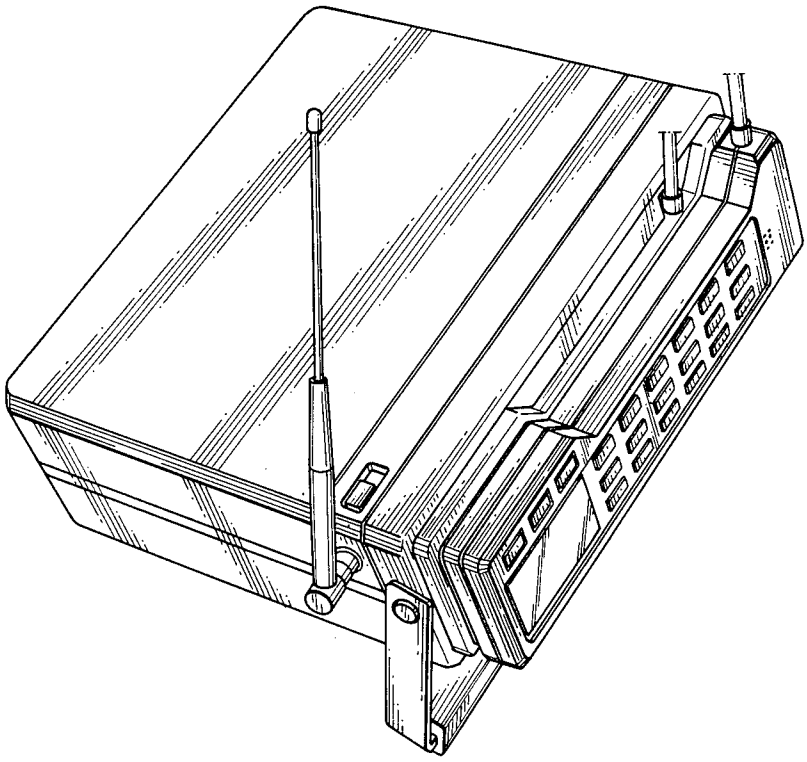

Fig. 10

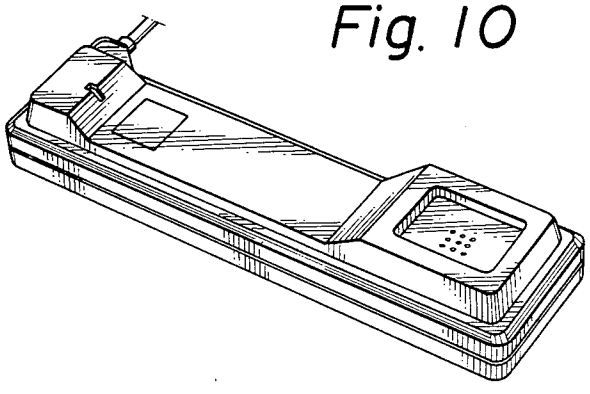

Fig. 11

