(12) INTERNATIONAL APPLICATION PUBLISHED UNDER THE PATENT COOPERATION TREATY (PCT)

(19) World Intellectual Property Organization
International Bureau

(43) International Publication Date
21 May 2015 (21.05.2015)

WIPO | PCT

(10) International Publication Number
WO 2015/073128 A1

(51) International Patent Classification:
B23K 26/03 (2006.01) *B23K 26/30* (2014.01)
G01J 1/42 (2006.01) *B23K 31/12* (2006.01)
B23K 26/06 (2014.01)

(21) International Application Number:
PCT/US2014/058157

(22) International Filing Date:
30 September 2014 (30.09.2014)

(25) Filing Language: English

(26) Publication Language: English

(30) Priority Data:
14/078,886 13 November 2013 (13.11.2013) US

(71) Applicant: **MEDTRONIC, INC.** [US/US]; 710 Medtronic Parkway NE., Minneapolis, Minnesota 55432 (US).

(72) Inventors: **NIKRIN, Peter M.**; 710 Medtronic Parkway NE., Minneapolis, Minnesota 55342 (US). **BUENDORF, David J.**; 710 Medtronic Parkway NE., Minneapolis, Minnesota 55432 (US). **HOWARD, Dennis L.**; 710 Medtronic Parkway NE., Minneapolis, Minnesota 55432 (US). **RAY, Paul C.**; 710 Medtronic Parkway NE., Minneapolis, Minnesota 55432 (US). **SANDERS, Matthew J.**; 710 Medtronic Parkway NE., Minneapolis, Minnesota 55432 (US).

(74) Agents: **BARDELL, Scott A.** et al.; Medtronic, Inc., 710 Medtronic Parkway NE., Minneapolis, Minnesota 55432 (US).

(81) Designated States *(unless otherwise indicated, for every kind of national protection available)*: AE, AG, AL, AM, AO, AT, AU, AZ, BA, BB, BG, BH, BN, BR, BW, BY, BZ, CA, CH, CL, CN, CO, CR, CU, CZ, DE, DK, DM, DO, DZ, EC, EE, EG, ES, FI, GB, GD, GE, GH, GM, GT, HN, HR, HU, ID, IL, IN, IR, IS, JP, KE, KG, KN, KP, KR, KZ, LA, LC, LK, LR, LS, LU, LY, MA, MD, ME, MG, MK, MN, MW, MX, MY, MZ, NA, NG, NI, NO, NZ, OM, PA, PE, PG, PH, PL, PT, QA, RO, RS, RU, RW, SA, SC, SD, SE, SG, SK, SL, SM, ST, SV, SY, TH, TJ, TM, TN, TR, TT, TZ, UA, UG, US, UZ, VC, VN, ZA, ZM, ZW.

(84) Designated States *(unless otherwise indicated, for every kind of regional protection available)*: ARIPO (BW, GH, GM, KE, LR, LS, MW, MZ, NA, RW, SD, SL, ST, SZ, TZ, UG, ZM, ZW), Eurasian (AM, AZ, BY, KG, KZ, RU, TJ, TM), European (AL, AT, BE, BG, CH, CY, CZ, DE, DK, EE, ES, FI, FR, GB, GR, HR, HU, IE, IS, IT, LT, LU, LV, MC, MK, MT, NL, NO, PL, PT, RO, RS, SE, SI, SK, SM, TR), OAPI (BF, BJ, CF, CG, CI, CM, GA, GN, GQ, GW, KM, ML, MR, NE, SN, TD, TG).

[Continued on next page]

(54) Title: SYSTEM FOR CONTINUOUS LASER BEAM MONITORING AND ANALYSIS THROUGH A PHOTODIODE SENSOR

(57) Abstract: A system (10) for continuously monitoring a laser beam (14) includes a photodiode sensor (18) mounted adjacent to a laser beam optical path (12). A laser beam optical path analysis module (22) connected to the photodiode sensor (18) and adapted to receive, analyze and report the sensor output from the photodiode sensor (18).

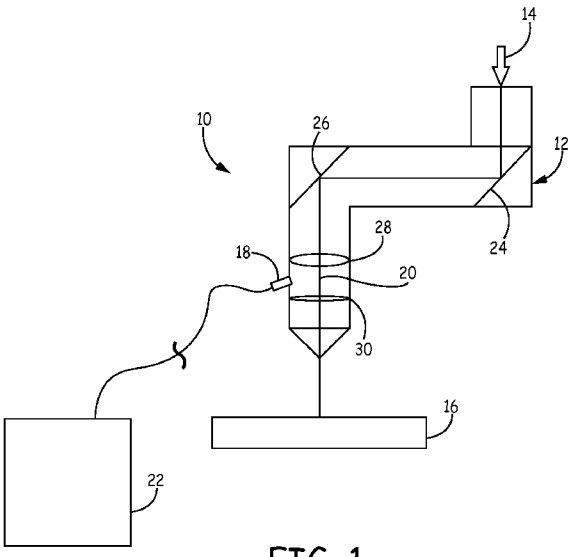

FIG. 1

WO 2015/073128 A1

Declarations under Rule 4.17:

— *as to applicant's entitlement to apply for and be granted a patent (Rule 4.17(ii))*

— *as to the applicant's entitlement to claim the priority of the earlier application (Rule 4.17(iii))*

Published:

— *with international search report (Art. 21(3))*

SYSTEM FOR CONTINUOUS LASER BEAM MONITORING AND ANALYSIS THROUGH A PHOTODIODE SENSOR

BACKGROUND

The disclosure relates to methods of continuously monitoring a laser beam using a photo diode sensor.

Lasers are an energy source which is used for welding materials by using pulsed high peak power combined with relatively small spot sizes. In order to insure reliable welds, features have been developed to provide increased control of the laser output. In some processes, the analysis of the quality of the weld is delegated to off-line visual inspection of each welded component. In other processes, infrared, ultraviolet, high-speed camera sound and transducer acoustic sensors are used as a part of monitoring techniques which typically use complex mathematical algorithms to analyze the sensor output. It is desirable to provide a laser monitoring system which utilizes a sensor for direct laser beam sensing and utilizes simple sensor output data analysis for quality control of welding processes and not laser beam power or energy.

SUMMARY

The disclosure provides systems for continuously monitoring a laser beam using a photo diode sensor. The photo diode sensor is mounted adjacent the optical path of a laser beam. A laser beam optical path analysis module is operatively connected to the photodiode sensor and is and adapted to receive, analyze and report the sensor output from the photodiode sensor.

BRIEF DESCRIPTION OF THE DRAWINGS

Figure 1 is a depiction of schematic diagram of an embodiment of a system of the disclosure;

Figure 2 is a depiction of schematic diagram of another embodiment of a system of the disclosure;

Figure 3 is a depiction of a flow diagram of a system for collecting and analyzing photodiode sensor data.

DETAILED DESCRIPTION

The systems of the disclosure are useful for continuously monitoring a laser beam of a laser system, for example a laser system for welding. By continuously monitoring a laser beam of a laser system used for welding a workpiece, the monitored characteristics or parameters of the laser beam can be, for example, correlated to welding process stability, and weld process control which affects weld quality of a workpiece. For example, some of the parameters of the laser beam that can be monitored continuously include the number of laser beam pulses fired, the average laser beam pulse duration, the maximum laser beam pulse duration, the minimum laser beam pulse duration, the average laser beam pulse amplitude, and combinations of any of these parameters. Such parameter measurements coupled with a data analysis module permits waveform evaluation and performance limits and acceptance criteria for example, for a weld or a welded workpiece. The systems described in this disclosure do not include or excludes the measurement or calculation of laser beam energy or power.

Figure 1 is a schematic depiction of an embodiment of a system for continuously monitoring a laser beam 10. The system 10 of Figure 1 comprises a laser beam head 12 which focuses a laser beam 14, for example, onto a workpiece 16, a photodiode sensor 18 mounted adjacent the optical path 20, and a laser beam optical path analysis module 22 connected to the photodiode sensor 18. In this embodiment, the laser beam head 12 contains bending mirrors 24, 26,

a final focusing optic 28 and a cover slide 30. The photodiode sensor is mounted into the laser beam head at a point that is downstream from all optics. In this embodiment, the photodiode sensor is mounted after the final focusing optic 28 and before the cover slide 30.

The position of the photodiode sensor relative to the laser beam is dependent upon the sensitivity of the photodiode sensor that is used and the energy produced by the laser. Typically, the photodiode sensor will produce more continuous signal or sensor output the closer in proximity it is to the laser beam and less continuous sensor output the farther in proximity it is from the laser beam. The more sensitive the photodiode is and the more energy produced by the laser, the further the distance the photodiode sensor can be positioned from the laser beam. Since the photodiode sensor is used to generate sensor output that is analyzed on a comparative basis, the distance of the photodiode sensor from the laser beam should be constant or fixed. In one example, the photodiode sensor can be mounted in a suitable lens tube (e.g.,Thorlabs) which can be threaded into a female threaded adapter that is within the laser beam head. Filtration can also be used to adjust the sensitivity of the photodiode sensor. Useful photodiode sensors have a wavelength within the range of the operating laser, for example, a range of 800-1700 nm and have a sensor made from silicon or indium gallium arsenide or both. The photodiode sensors should also have a rise/fall time that exceeds the range of the operating laser.

Generally, any industrial or commercial laser that can be used in pulsed or continuous wave modes can be used in the systems described in this disclosure, for example, a Nd:YAG laser.

Figure 2 is a schematic depiction of another embodiment of a system for continuously monitoring a laser beam 50. The system 50 of Figure 2 comprises a laser beam head 52 which focuses a laser beam 54, for example, onto a workpiece 56, a photodiode sensor 58 mounted in the optical path 60, and a laser beam optical path analysis module 62 connected to the photodiode sensor 58. In this embodiment, the laser beam head 52 contains a bending mirror 64, a mirror galvanometer 66, a final focusing optic 68 and a cover slide 70. The photodiode

sensor is mounted in the laser beam head at a point that is downstream from all optics, including the mirror galvanometer. In this embodiment, the photodiode sensor is mounted downstream from or after the final focusing optic 68 and upstream from or before the cover slide 70.

Figure 3 is a flow diagram 100 of an embodiment of the logic used to analyze the data acquired from the photodiode in an embodiment of a laser beam path analysis module. A data acquisition system first receives and records the photodiode sensor output 102, for example voltage waveforms from the photodiode which correspond to laser beam pulses resulting from the welding process, for example, on a component part or a substrate. The sample rate of the photodiode sensor is dependent upon the particular application and the parameters of the laser beam that are being monitored, for example, the number of laser beam pulses fired, the average laser beam pulse duration, the maximum laser beam pulse duration, the minimum laser beam pulse duration, and the average laser beam pulse amplitude. In one embodiment, the sample rate of the photodiode sensor is about $1000s^{-1}$.

Once the photodiode sensor output is received and recorded for that particular welding process, the data acquisition system saves the acquired sensor data to a file 104. Computer software is used to review the acquired sensor data beginning with the first acquired data to identify a first data point above a pre-set threshold 106. The threshold is set to remove noise from any subsequent calculations. The computer software records a time stamp for the first acquired data, i.e., the rising edge of the pulse or voltage waveform, above the threshold 108.

For subsequent voltage waveforms having rising edges, the software also records a time stamp for the time between the previous falling edge of the previous voltage waveform that crosses the threshold and the rising edge of the subsequent voltage waveform 110 that crosses the threshold. This time stamp or period corresponds to the off-time or duty cycle of the laser beam pulses. For each voltage waveform, the computer software records a time stamp of the falling edge of the voltage waveform 112. From this time stamp and the time stamp

recorded for the rising edge of the voltage waveform 108, a pulse width or voltage waveform width is calculated for each laser beam pulse 114.

For each pulse or voltage waveform, the computer software captures all of the data point between the rising and falling edges above the threshold and calculates a moving average of the collected data points 116. From this data, the moving average having the highest value is selected and recorded as the amplitude of the pulse or voltage waveform 118. The computer software records all of the collected and calculated data corresponding to the particular welding process 120.

Since the data from the photodiode sensor is collected real-time during a welding process and stored, the analysis of the collected data to determine the duty cycle, pulse width and pulse amplitude can be performed in different ways. In one embodiment, each set of collected data for each complete pulse or voltage waveform can be analyzed individually in steps 106 through 118 sequentially. In this embodiment, each subsequent set of data corresponding to a “pulse” would be analyzed in the same way until the collected data was exhausted. In another embodiment, all of the collected data corresponding to all of the pulses is analyzed at each individual step. Once the first data point threshold is determined at 106, then all of the data corresponding to all of the pulses recorded for a welding event would be analyzed to determine time-off between each pulse or duty cycle. Next, all of the data recorded for all of the pulses would be analyzed to determine the pulse width of all of the pulses. Then the same process is used to determine the pulse amplitude for each pulse.

In another embodiment, the system can be used to count the number of pulses required to complete a task, for example, a seam weld or a series of spot welds. In an application where the same area of seam or the same number of spot welds on a workpiece is welded on an assembly line, the number of pulses used could be calculated and compared to a threshold or average or maximum and used as a quality parameter.

In another embodiment using a continuous wave, the amount of time the laser beam is on to weld an entire seam or spot weld an area can be measured and compared to minimum, average and maximum values of the amount of time the laser beam is on and used as a quality parameter.

The amount of time the laser beam is on can also be used to correlate to other parameters. For example, the amount of time the laser beam is on can be correlated to: engraving quality by verifying the depth of engraving; cutting quality by verifying the depth of the cut; and marking quality by verifying that the energy delivered by the laser beam is not high enough to ablate the material or workpiece. The amount of time the laser beam is on can also be used to verify the adequacy or quality of heat treating of a workpiece and the amount of a material that is deposited.

Whichever method of data analysis is used, further data analysis, such as statistical analysis, can be performed. Statistical analysis can be used for example to determine averages, medians, standard deviation, ranges and process control limits. Such statistical analysis results can be used as an indication of whether the welding process has performed within acceptable control limits. Such a comparison can be used as an indication of the presence or absence of a welding process having an acceptable level of quality or performance.

CLAIMS:

1. A system for continuously monitoring a laser beam having an optical path comprising:

a photodiode sensor mounted adjacent the optical path adapted to provide a continuous sensor output; and

a laser beam optical path analysis module connected to the photodiode sensor and adapted to receive, analyze and report the sensor output from the photodiode sensor.

2. The system of claim 1 wherein the laser beam optical path analysis module reports the sensor output as number of laser beam pulses fired, average laser beam pulse duration, maximum laser beam pulse duration, minimum laser beam pulse duration, average laser beam pulse amplitude, or any combination thereof.

3. The system of claim 1 wherein the photodiode sensor is mounted adjacent the optical path and downstream of any optics.

4. The system of any one of claims 1 – 3 wherein the photodiode sensor is mounted within a laser beam head and downstream from a final focusing optic.

5. The system of any one of claims 1 – 3 further comprising a mirror galvanometer.

6. The system of claim 5 wherein the photodiode sensor is mounted downstream from the mirror galvanometer.

7. The system of any one of claims 1 – 3 further comprising a laser.

8. The system of claim 7 wherein the laser emits a laser beam having a wavelength of from 800 to 1700 nm.

9. The system of claim 1, 2 or 3 wherein the laser beam optical path analysis module excludes reporting the sensor output as laser beam energy or laser beam power.

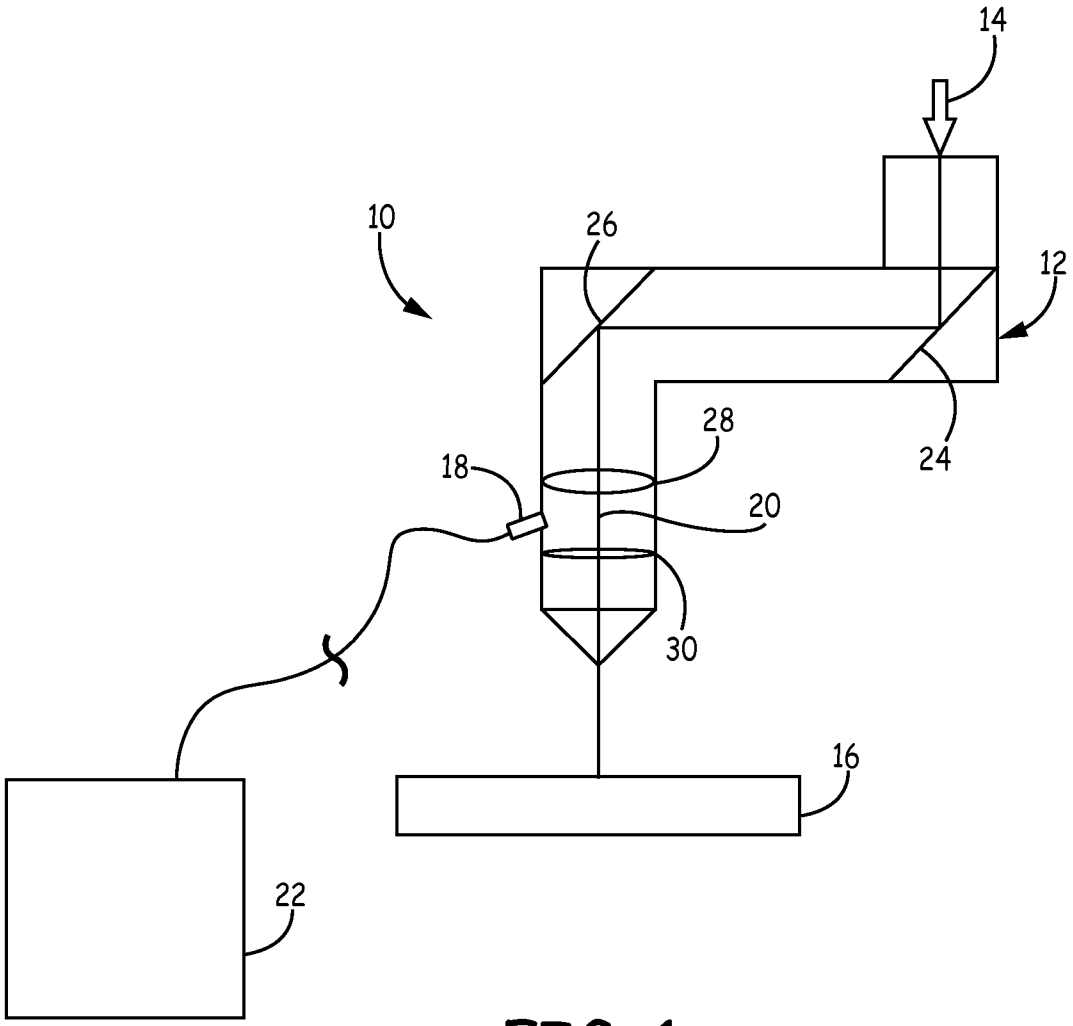

FIG. 1

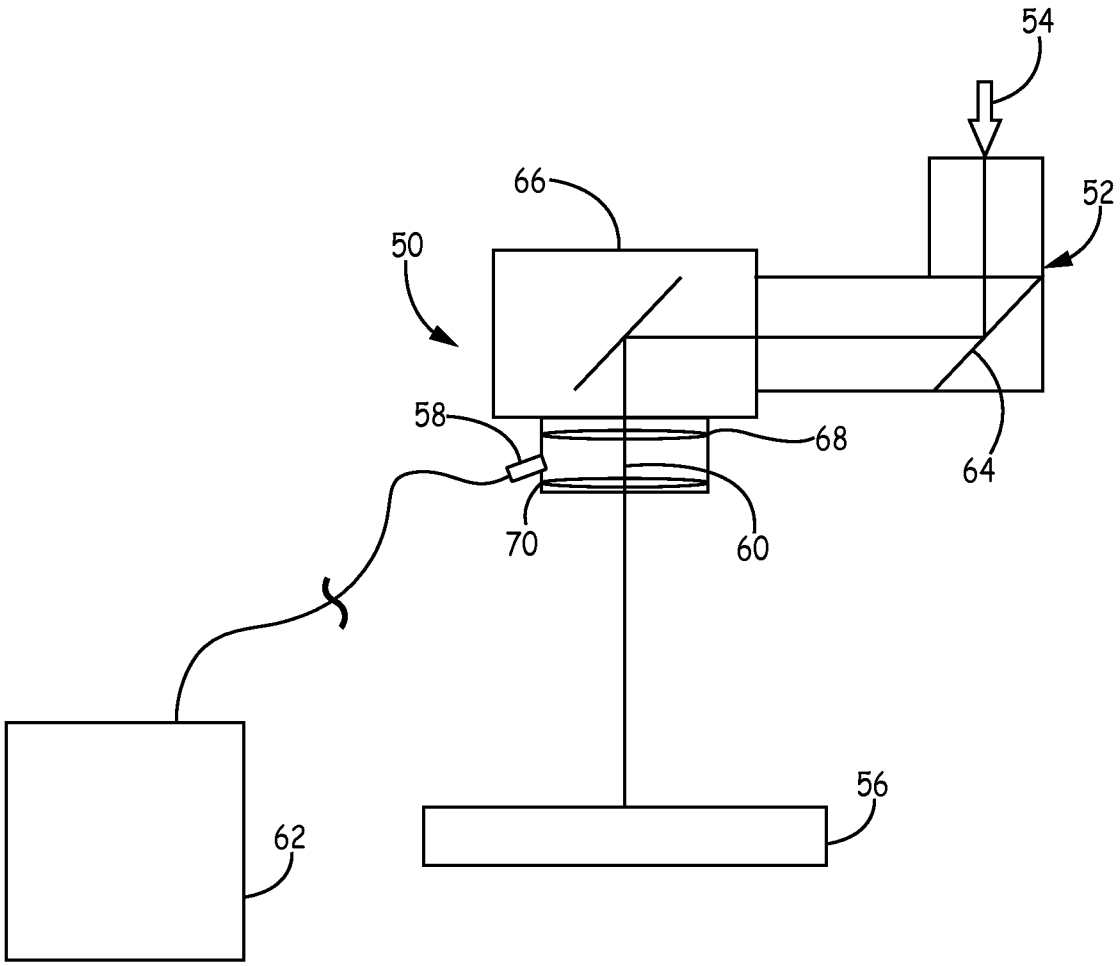

FIG. 2

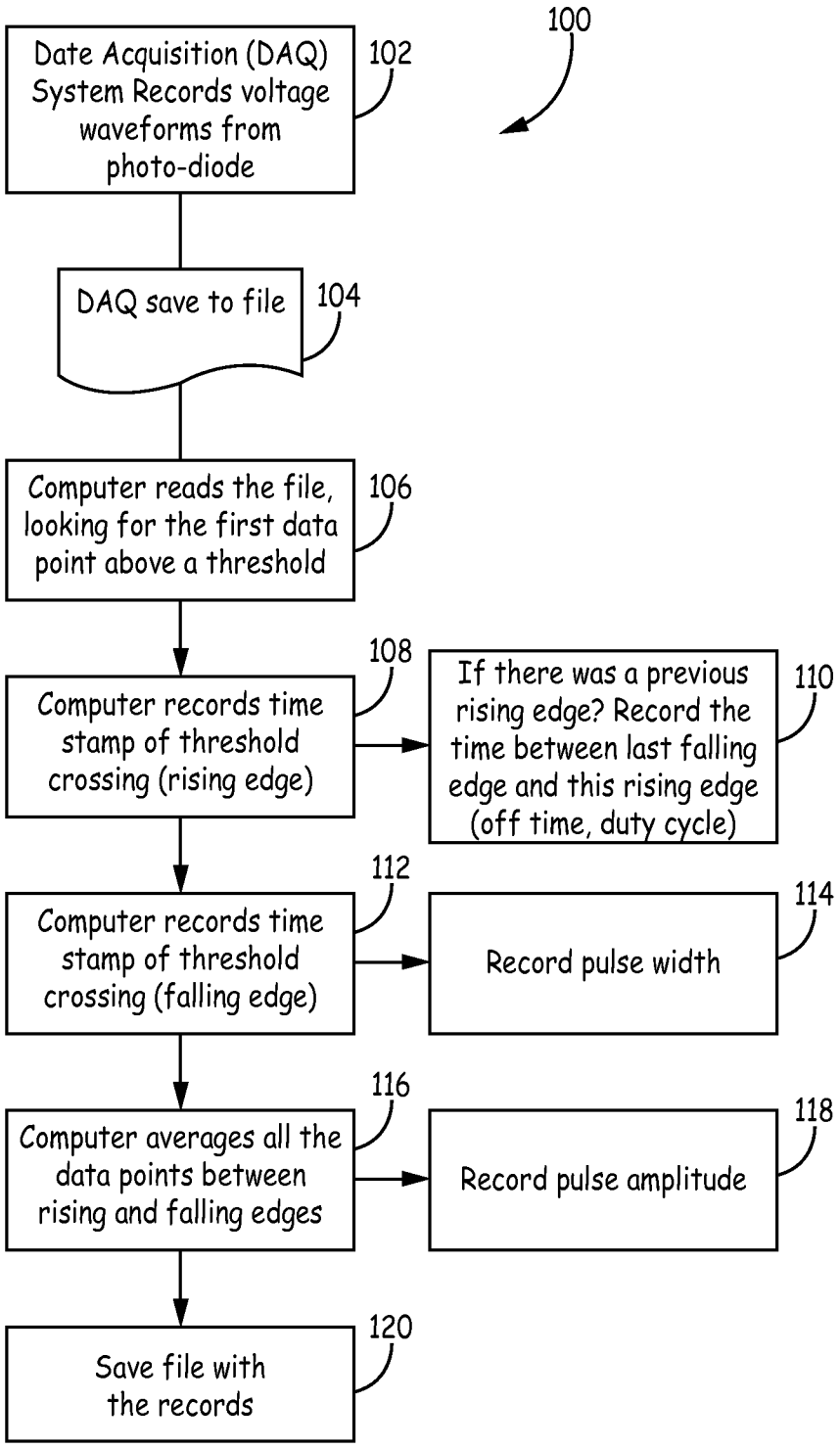
100
Date Acquisition (DAQ) System Records voltage waveforms from photo-diode
102
DAQ save to file
104
Computer reads the file, looking for the first data point above a threshold
106
Computer records time stamp of threshold crossing (rising edge)
108
If there was a previous rising edge? Record the time between last falling edge and this rising edge (off time, duty cycle)
110
Computer records time stamp of threshold crossing (falling edge)
112
Record pulse width
114
Computer averages all the data points between rising and falling edges
116
Record pulse amplitude
118
Save file with the records
120

FIG. 3

INTERNATIONAL SEARCH REPORT

International application No
PCT/US2014/058157

A. CLASSIFICATION OF SUBJECT MATTER
INV. B23K26/03 G01J1/42 B23K26/06 B23K26/30 B23K31/12
ADD.

According to International Patent Classification (IPC) or to both national classification and IPC

B. FIELDS SEARCHED

Minimum documentation searched (classification system followed by classification symbols)
B23K G01J

Documentation searched other than minimum documentation to the extent that such documents are included in the fields searched

Electronic data base consulted during the international search (name of data base and, where practicable, search terms used)
EPO-Internal, WPI Data

C. DOCUMENTS CONSIDERED TO BE RELEVANT

Category*	Citation of document, with indication, where appropriate, of the relevant passages	Relevant to claim No.
X Y	US 2007/250049 A1 (T. FEIGE ET AL) 25 October 2007 (2007-10-25) paragraphs [0006], [0026] - [0028]; figures	1,3-9 2
Y	US 2011/298156 A1 (A. HOOPER ET AL) 8 December 2011 (2011-12-08) paragraphs [0062], [0064], [0143] - [0146]; figures	2
X A	US 2012/092755 A1 (B. W. BAIRD ET AL) 19 April 2012 (2012-04-19) paragraph [0052]; figures	1-3,7-9 4-6
X	US 6 646 728 B1 (N. TANG ET AL) 11 November 2003 (2003-11-11) column 8, lines 7-33; figures	1,7-9

-/--

[X] Further documents are listed in the continuation of Box C.

[X] See patent family annex.

* Special categories of cited documents :

"A" document defining the general state of the art which is not considered to be of particular relevance

"E" earlier application or patent but published on or after the international filing date

"L" document which may throw doubts on priority claim(s) or which is cited to establish the publication date of another citation or other special reason (as specified)

"O" document referring to an oral disclosure, use, exhibition or other means

"P" document published prior to the international filing date but later than the priority date claimed

"T" later document published after the international filing date or priority date and not in conflict with the application but cited to understand the principle or theory underlying the invention

"X" document of particular relevance; the claimed invention cannot be considered novel or cannot be considered to involve an inventive step when the document is taken alone

"Y" document of particular relevance; the claimed invention cannot be considered to involve an inventive step when the document is combined with one or more other such documents, such combination being obvious to a person skilled in the art

"&" document member of the same patent family

Date of the actual completion of the international search	Date of mailing of the international search report
13 February 2015	25/02/2015

Name and mailing address of the ISA/	Authorized officer
European Patent Office, P.B. 5818 Patentlaan 2 NL - 2280 HV Rijswijk Tel. (+31-70) 340-2040, Fax: (+31-70) 340-3016	Jeggy, Thierry

1

Form PCT/ISA/210 (second sheet) (April 2005)

INTERNATIONAL SEARCH REPORT

International application No
PCT/US2014/058157

C(Continuation). DOCUMENTS CONSIDERED TO BE RELEVANT

Category*	Citation of document, with indication, where appropriate, of the relevant passages	Relevant to claim No.
A	US 2005/115940 A1 (N. MATSUSHITA ET AL) 2 June 2005 (2005-06-02) paragraph [0037]; figures -----	3,4

1

INTERNATIONAL SEARCH REPORT

Information on patent family members

International application No
PCT/US2014/058157

Patent document cited in search report	Publication date	Patent family member(s)	Publication date
US 2007250049 A1	25-10-2007	AT 306883 T	15-11-2005
		AU 6745001 A	26-11-2001
		DE 10024079 A1	22-11-2001
		DE 50107758 D1	24-11-2005
		EP 1292255 A2	19-03-2003
		US 2004039377 A1	26-02-2004
		US 2007250049 A1	25-10-2007
		WO 0187199 A2	22-11-2001
US 2011298156 A1	08-12-2011	CN 103477427 A	25-12-2013
		EP 2691982 A2	05-02-2014
		JP 2014514754 A	19-06-2014
		KR 20140006032 A	15-01-2014
		TW 201244861 A	16-11-2012
		US 2011298156 A1	08-12-2011
		WO 2012135036 A2	04-10-2012
US 2012092755 A1	19-04-2012	CN 101496320 A	29-07-2009
		JP 2009545177 A	17-12-2009
		KR 20090037895 A	16-04-2009
		TW 200832850 A	01-08-2008
		US 2012092755 A1	19-04-2012
		WO 2008014331 A2	31-01-2008
US 6646728 B1	11-11-2003	NONE	
US 2005115940 A1	02-06-2005	CN 1623718 A	08-06-2005
		DE 102004056334 A1	04-08-2005
		JP 2005161361 A	23-06-2005
		TW I266669 B	21-11-2006
		US 2005115940 A1	02-06-2005