June 11, 1968 A. C. VELDHUIS 3,388,400

BROADBANDING ADAPTER FOR CIRCULARLY POLARIZED ANTENNA

Filed May 28, 1965 3 Sheets-Sheet 1

FIG. 1

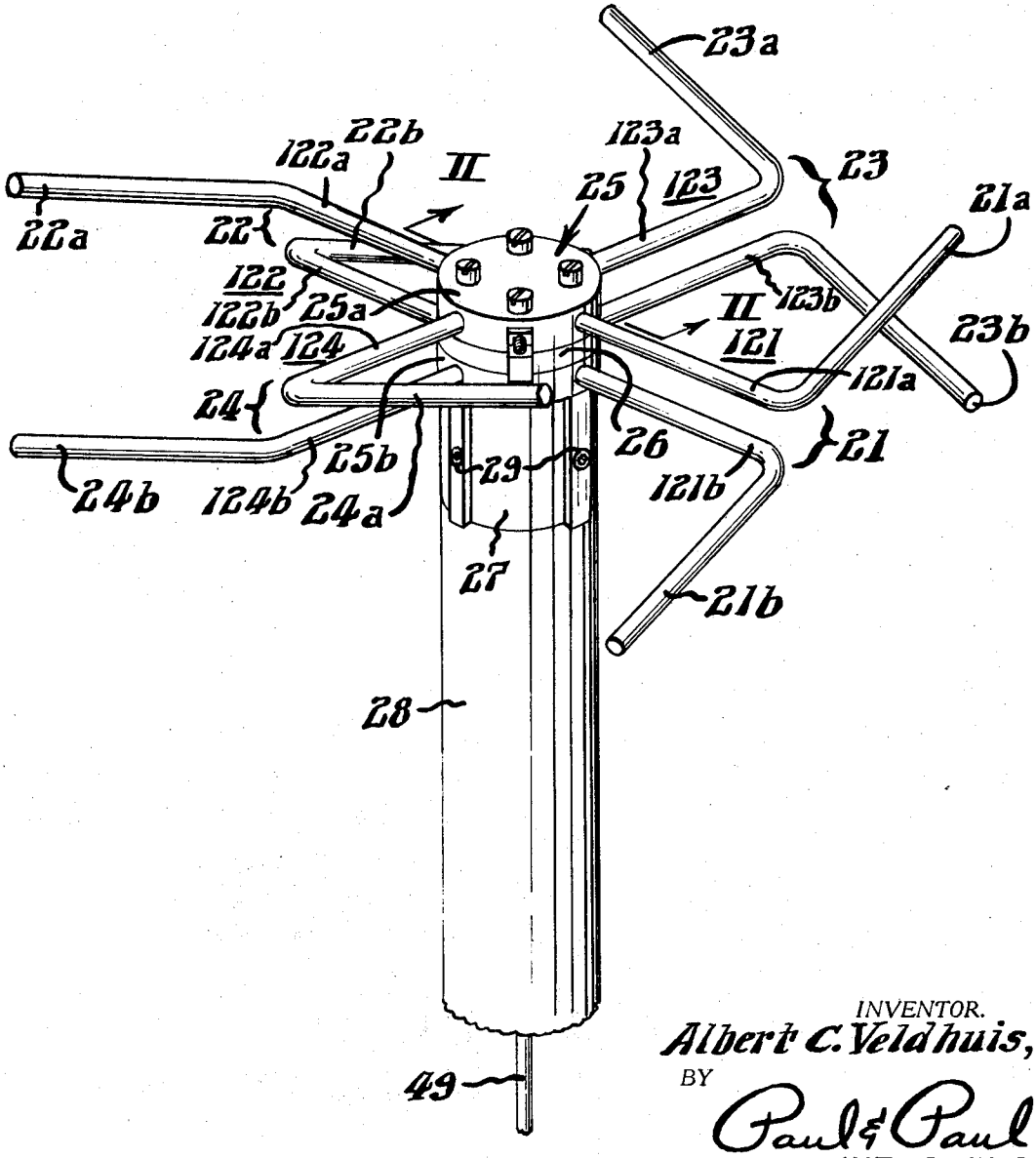

INVENTOR.
Albert C. Veldhuis,
BY
Paul & Paul
ATTORNEYS.

June 11, 1968 A. C. VELDHUIS 3,388,400

BROADBANDING ADAPTER FOR CIRCULARLY POLARIZED ANTENNA

Filed May 28, 1965 3 Sheets-Sheet 2

FIG. 2

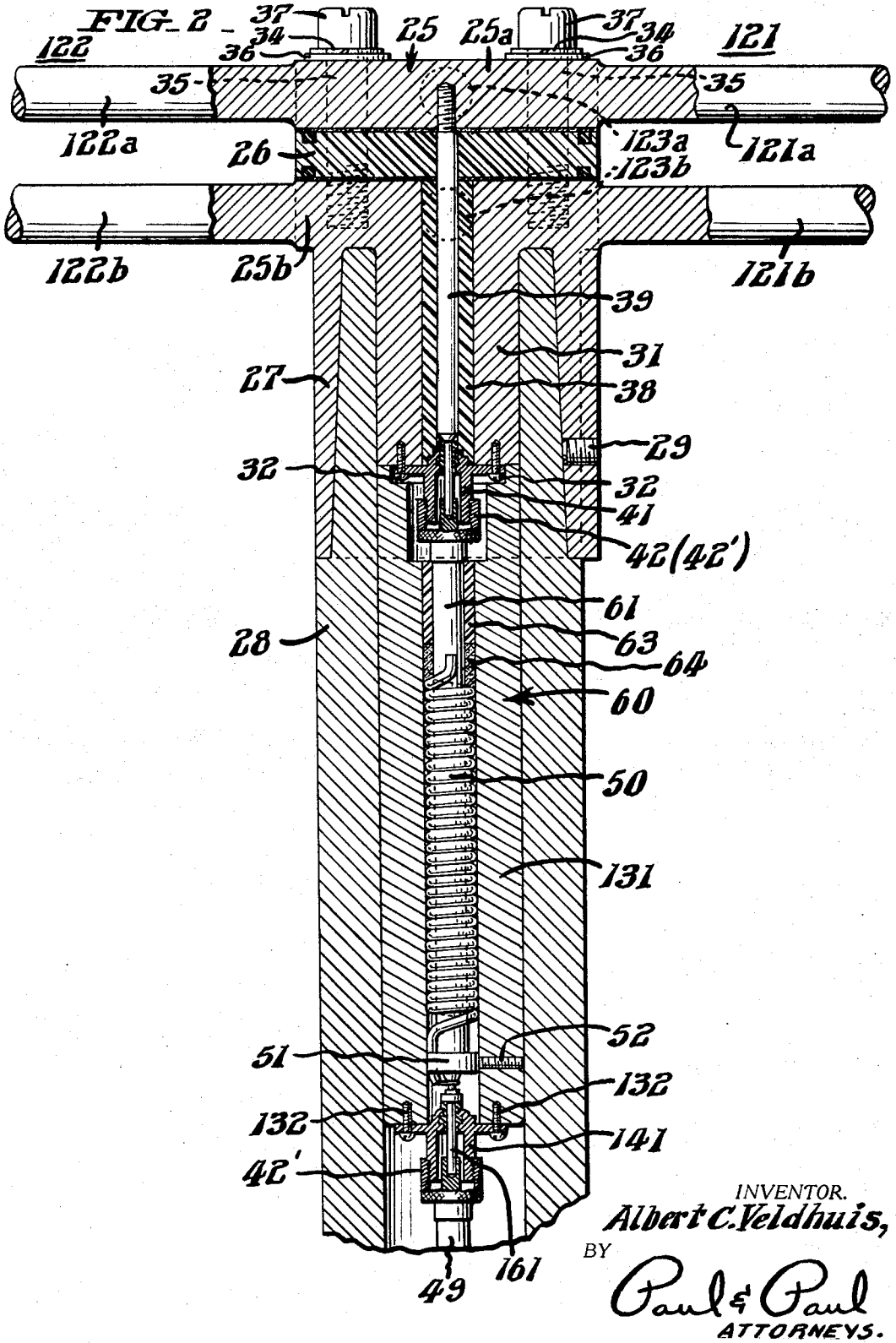

INVENTOR.
Albert C. Veldhuis,
BY
Paul & Paul
ATTORNEYS.

BROADBANDING ADAPTER FOR CIRCULARLY POLARIZED ANTENNA

Filed May 28, 1965 3 Sheets-Sheet 3

FIG. 3

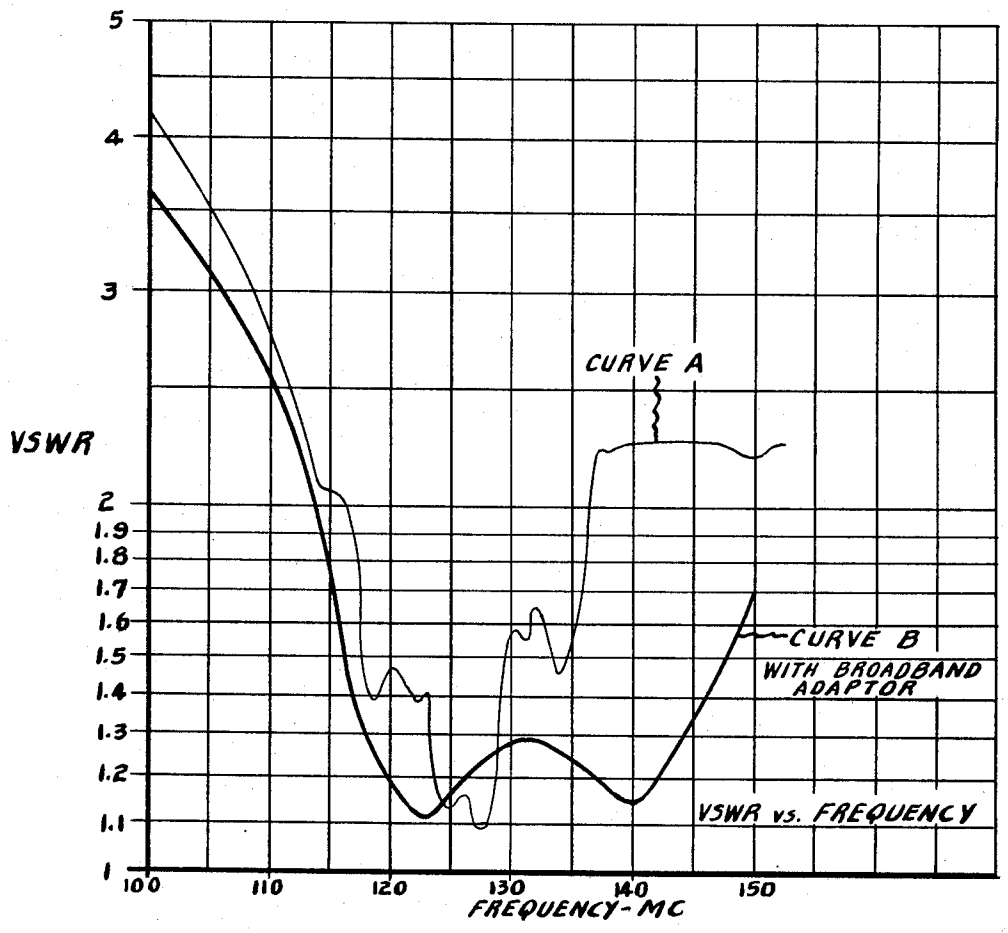

INVENTOR.
Albert C. Veldhuis,
BY
Paul & Paul
ATTORNEYS.

United States Patent Office 3,388,400 Patented June 11, 1968

3,388,400

BROADBANDING ADAPTER FOR CIRCULARLY POLARIZED ANTENNA

Albert C. Veldhuis, West Chester, Pa., assignor to Trylon Incorporated, Elverson, Pa., a corporation of Pennsylvania

Filed May 28, 1965, Ser. No. 459,545
2 Claims. (Cl. 343—822)

This invention relates to VHF (very high frequency) circularly polarized antennae of the type or types in use for airport ground to air communications.

There are in operation a large number of circularly polarized ground to air control tower antennae of the Federal Aviation Agency. One example is FA–5301 which were made in accordance with Federal Aviation Agency Specification FAA–R–766b, Amendment No. 2 dated Apr. 27, 1960. These antennae utilize four half-wavelength dipoles spaced approximately one-third wavelength at the mid-band frequency of operation. The frequency range of the antenna is 118 to 135 megacycles. Each dipole is inclined 30° from the horizontal plane. The dipole elements of the four dipoles are connected to a central support body or hub by means of four parallel transmission lines of approximately 200 ohms impedance. The input receptacle at the base of the antenna is a type UG–58A/U fitting for connection to RG–8/U coaxial cable.

The object of the present invention is to provide broadbanding means which may be readily and easily installed in the field at the site of existing antenna type FA–5301, and similar type antennae, thereby to improve the impedance characteristics of the antenna over a wider range of frequencies. This object is achieved in accordance with the present invention by the provision and connection of a simple broadbanding stub.

In the drawing:

FIG. 1 is a perspective illustration of a VHF circularly polarized antenna, type FA–5301; included within the antenna mast **28**, but not visible in FIG. 1, is the broadbanding adapter of the present invention;

FIG. 2 is a view in section along the line II—II of FIG. 1 showing the structural details of the broadbanding stub and the place and manner of its insertion into an existing antenna type FA–5301 to transform the antenna to broadband operation; and

FIG. 3 is a graphical representation which illustrates the improvement achieved by the broadband device of the present invention.

Referring now to FIG. 1, there is illustrated a circularly polarized antenna type FA–5301. This antenna has four half-wavelength dipoles **21**, **22**, **23** and **24** each of which is inclined 30° from the horizontal plane. Each dipole is comprised of two elements identified by the suffix *a* and *b* added to the reference numeral of the particular dipole. For example, dipole **21** is comprised of dipole elements **21***a* and **21***b*; dipole **22** is comprised of dipole elements **22***a* and **22***b*; etc. Each pair of dipole elements is connected to a central support hub **25** by a 200-ohm parallel transmission line. For example, dipole **21** is connected to the central hub **25** by parallel transmission line **121** comprised of conductor arms **121***a* and **121***b* connecting dipole elements **21***a* and **21***b*, respectively.

Central support hub **25** is comprised of an upper element **25***a* and a lower element **25***b* separated from each other by an insulating spacer **26**. The *a* dipole elements **21***a*, **22***a*, **23***a*, **24***a*, are connected to and supported by the upper hub element **25***a*. The *b* dipole elements **21***b*, **22***b*, **23***b* and **24***b* are connected to and supported by the lower hub element **25***b*.

The upper hub element **25***a*, the four upper transmission lines **121***a*, **122***a*, etc., and the four *a* dipole elements, are all part of a one-piece solid aluminum alloy #43 casting. Similarly, the lower hub element **25***b*, the four lower transmission lines **121***b*, **122***b*, etc., and the four *b* dipole elements, are all part of a one-piece solid aluminum alloy #43 casting.

The lower hub casting also includes a depending cylindrical skirt portion **27** adapted to fit over the antenna mast **28** and to be secured thereto as by set screws **29**. The lower hub casting includes, within the depending cylindrical skirt portion **27**, a depending tubular hub portion **31**.

As already indicated, the upper hub casting is separated from the lower hub casting by an insulating spacer **26**, preferably plastic. The upper hub casting is secured to the lower hub casting by four nylon studs **35** each equipped with suitable O-ring **36**, lock washer **34**, and cap nut **37**.

An antenna lead-in connecting rod **39** is threaded into a hole in the upper hub casting and extends downwardly along the center axis of the lower hub casting, within the depending tubular hub portion **31** from which it is insulated by an acrylic tube **38**.

Rod **39** terminates at its lower end in a pin connector which projects beyond the lower end of tubular hub **31** and is adapted to be received by the center conductor socket of a coaxial-cable connector **42** (**42'**). Secured to the lower end of the tubular hub **31** by screws **32** is a coaxial cable receptacle **41** type UG–58/A/U having a depending cylindrical flange portion externally threaded for receiving the internally-threaded outer-conductor collar of the coaxial-cable connector **42** (**42'**). The rod **39** and its pin connector are suitably insulated from the receptacle **41**.

In the existing antennae, type FA–5301, the connector **41** is normally connected to the cable connector **42** (**42'**) of the coaxial input cable. However, to transform the existing antenna type FA–5301 from narrow to broadband characteristics, the coaxial input cable is, in accordance with my present invention, disconnected from the receptacle **41** and a broadband adapter **60** is interposed between receptacle **41** and the input end of the coaxial input cable. The structure of the broadband adapter and the manner in which it is connected will now be described.

To add the broadband adapter **60** to an existing antenna type FA–5301, the set screws **29** are loosened and the entire antenna mast assembly is carefully lifted from the antenna mast **28**, pulling and pushing the coaxial input cable **49** up along with the antenna. Mast **28** will ordinarily be o 2½" standard weight galvanized pipe with a nominal O.D. of 2.875". The collar portion of the connector, identified by the reference designation **42** (**42'**), is uncoupled from the receptacle **41** and the pin of the antenna rod **39** is pulled out of the female socket portion of the connector.

The broadbander device, identified comprehensively by reference numeral **60**, is now connected between the receptacle **41** and the connector, and the connector becomes relocated lower down the mast **28**. This connector is seen at the bottom of the drawing in FIG. 2, and is identified as **42'**.

The broadbander device comprises a straight section of coaxial cable **61** about which is coiled a length of helical coaxial cable **50** which functions as the stub. The coaxial cable section **61** and the helical stub **50** are located within the bore of a section of tubing **131** of suitable material, such as brass, copper, silvered brass, etc. Tubing **131** has a diameter which allows it to be inserted into the antenna mast **28** and to abut against the lower end of the tubular hub **31** of the antenna lower hub casting.

The upper end of the section of coaxial cable **61** is provided with a connector **42** (similar to connector **42'** referred to above) and adapted to couple the center conductor of coaxial cable **61** to the antenna lead-in rod **39**

and to connect the outer conductor of coaxial cable **61** to the tubular hub **31**.

The lower end of the broadbander device **60** is provided with a receptacle **141** similar to that of receptacle **41** located at the lower end of tubular hub **31**. Receptacle **141** is secured to the lower end of the tubing **131** by screws **132**. The center conductor of coaxial cable section **61** terminates at its lower end in a pin **161** which couples to the female inner portion of connector **42'** of coaxial input cable **49**.

At the lower end of helical coaxial stub **50**, the center conductor of the stub is connected to the center conductor of the coaxial section **61**, and the outer conductor of the helical coaxial stub **50** is connected to a brass grounding ring **51**. Ring **51** is secured to the tubing **131** by a set screw **52**. Thus, the outer conductor of the helical coaxial stub is in good electrical contact with the brass tubing **131**.

As seen in FIG. 2, the helical coaxial stub **50** does not occupy the full length of the coaxial cable section **61** and the annular space above the helical stub is mostly occupied by a fiber insulator tube **63**. The space between the lower end of the fiber tube **63** and the upper end of the helical stub **50** is filled with an insulating compound **64**, such as Dow Corning Compound DC–5.

The length of the coaxial section **61** is 8½ inches. The point of connection of the helical stub **50** to the coaxial section **61** is 12 inches from the dipole terminals at the location of the spacer **26**. This is equal to .124 wavelength at 120 megacycles. The helical stub **50** is 34½ inches long, which is equivalent to .350 wavelength at 120 megacycles.

I have discovered by the relatively simple expediency of inserting the broadbanding device **60** just described to an existing circularly polarized antenna type FA–5301, the antenna may be transformed from a relatively narrow band into a broadband antenna having a voltage standing wave ratio versus frequency characteristic such as is illustrated in FIG. 3 by curve B.

Referring now to FIG. 3, curve A represents the voltage standing wave ratio (VSWR) versus frequency of the existing antenna type FA–5301 prior to insertion of the broadbander device **60**. This antenna has a voltage standing wave ratio of 1.7:1 measured at the end of a 50-foot length of RG–8/U coaxial cable. The frequency range is 118–135 megacycles.

I have found that the voltage standing wave ratio versus frequency characteristic of the existing antenna FA–5301 can be substantially improved by the insertion of the broadbanding device **60**. When the device **60** is connected, the voltage standing wave ratio versus frequency characteristic becomes that shown by curve B in FIG. 3. Curve B, as will be seen, represents a substantial improvement over curve A. In its improved form, the modified antenna has a voltage standing wave ratio of 1.3:1 and a frequency range of from 118 to 144 megacycles.

Having described my invention, I claim:

1. A broadbanding adapter for modifying existing VHF circularly polarized antenna operating in a frequency range which includes 120 megacycles, said adapter comprising a straight length of coaxial cable having a coaxial open-end stub wound helically thereabout and connected thereto near one end, and connector means for interposing said straight length of coaxial cable and its helical coaxial open-end stub between the input receptacle of the antenna to be modified and the connector at the input end of the coaxial input cable, the length of said helical coaxial open-end stub being substantially .350 wavelength at 120 megacycles and its point of connection being substantially .124 wavelength from the antenna terminals.

2. A broadbanding adapter for modifying existing mast-mounted VHF circularly polarized antenna operating in a frequency range which includes 120 megacycles, said adapter comprising a length of conductive tubing adapted to fit within said antenna mast, and having within said tubing a straight length of coaxial cable having a coaxial shunt open-end stub wound helically thereabout and having the lower end of said stub connected to said straight length of coaxial cable near the lower end thereof, connector means for connecting the upper end of said straight length of coaxial cable to the input receptacle of the antenna to be modified, and connector means for connecting the lower end of said straight length of coaxial cable to the input end of the coaxial input cable, the length of said helical coaxial open-end stub being substantially .350 wavelength at 120 megacycles and its point of connection being substantiallly .124 wavelength from the antenna terminals.

References Cited

UNITED STATES PATENTS

2,567,235	9/1951	Rabuteau	343—822
3,196,443	7/1965	Martin	343—897

ELI LIEBERMAN, *Primary Examiner.*